EFFECTS OF ELECTRICAL DISCHARGE MACHINING (EDM) JET FLUSHING SETTING ON THE MACHINING OF TOOL STEEL WORKPIECE

HASSAN BIN MUDA

BACHELOR OF MECHANICAL ENGINEERING
UNIVERSITI MALAYSIA PAHANG

EFFECTS OF ELECTRICAL DISCHARGE MACHINING (EDM) JET FLUSHING SETTING ON THE MACHINING OF TOOL STEEL WORKPIECE

HASSAN BIN MUDA

Thesis submitted in fulfillment of the requirements for the award of the degree of
Bachelor of Mechanical Engineering with Manufacturing Engineering

Faculty of Mechanical Engineering
UNIVERSITI MALAYSIA PAHANG

NOVEMBER 2009

SUPERVISOR'S DECLARATION

I hereby declare that I have checked this project and in my opinion, this project is adequate in terms of scope and quality for the award of the degree of Bachelor of Mechanical Engineering with Manufacturing Engineering.

Signature :

Name of Supervisor : Mohamed Reza Zalani Bin Mohamed Suffian

Position : Head of Programme (Industry)

Date : 17 November 2009

STUDENT'S DECLARATION

I hereby declare that the work in this project is my own except for quotations and summaries which have been duly acknowledged. The project has not been accepted for any degree and is not concurrently submitted for award of other degree.

Signature :

Name : Hassan Bin Muda

ID Number : ME 06012

Date : 17 November 2009

ACKNOWLEDGEMENTS

I would like to express my gratitude to all that gave me that the contribution to complete this thesis project. I would like to express my most sincere appreciate to my supervisor Mr Mohamed Reza Zalani Bin Mohamed Suffian for providing tremendous technical guidance, advice, continuous encouragement, constructive criticisms, suggestion throughout this project and administrative support in making this research possible. I am very thankful for his tolerance and patient of my naïve mistakes and his commitment and co-operation to my research. He is always there when I need some opinion and suggestion at difficult time. I also sincerely thanks for the time he spent correcting my many mistakes. I appreciate his consistent support from the first day I applied to graduate program to these concluding moments. All of his sacrifice will be appreciated. I also would like to express very special thanks to Mr Mohamad Zairi bin Baharom for his suggestions and co-operation throughout the study. And also thanks to Dean Faculty of Mechanical Engineering, Associate Prof. Dr. Rosli Bin Abu Bakar for his advice and suggestion.

Many thanks go to the assistant instructor engineer (PJP) especially to Mr. Khairul Azha B A Jalal, and to all the supervisors who have given their full effort in guiding the through on the project progress. I acknowledge my sincere indebtedness and gratitude to my parents for their love, dream and sacrifice throughout my life. Special thanks should be given to my committee members. I would like to acknowledge their comments and suggestions, which was crucial for the successful completion of this project.

ABSTRACT

Electrical Discharge Machining (EDM) is one of the most accurate manufacturing process for creating complex or simple shape and geometries within parts and assemblies. EDM works by eroding material in path of electrical discharges that form an arc between an electrode tool and the work piece. The objective of this thesis project is to determine effect of EDM jet flushing setting on the machining of tool steel workpiece. The most important parameters of EDM are the material removal rate (MRR) and surface roughness (Ra). The non-electrical factors are considered in this experiment where the electrical factor has been fixed. In this thesis the influence of electrode material, flushing, electrode dimension and depth of cut on EDM performance is discussed. The analysis of the influence of these factors was carried out by adopting a complete factorial experiment. Graphite and Copper are used as electrode to machine the workpiece. Flushing is used in EDM to remove the eroded particle from the gap for efficient cutting. There are two level of flushing setting, for low level flushing is not used and at high level flushing is used. Electrode dimension for low level is 10 mm and high level is 30 mm. the factor for depth of cut is 10 mm at low and 20 mm at high level. The dielectric fluid is used kerosene. The effects of jet flushing was analyzed and discussed. The result had proved that flushing is very important to influence MRR and Ra result.

ABSTRAK

Mesin Nyahcas Elektik atau lebih dikenali sebagai Electrical Discharge Machining (EDM) merupakan salah satu proses pembuatan yang sangat berkesan untuk merekabentuk sesuatu yang sukar atau bentuk yang mudah dan mengeometri antara bahagian dan penyambungan. EDM berfungsi sebagai menghakis bahan dalam laluan bagi nyahcas elekrik yang membentuk sebuah lengkungan di antara elektrod dan kepingan bahan kerja. Matlamat bagi projek tesis ini ialah untuk menentukan kesan bagi jet bilasan EDM yang disetkan pada mesin bagi bahan kerja keluli. Parameter bagi EDM yang terpenting adalah Kadar Penghakisan bahan(MRR) dan Kekasaran Permukaan (Ra). Faktor bukan-elektik digunakan di dalam eksperimen ini di mana factor elekrik ini telah ditetapkan. Factor yang mempengaruhi tesis ini yang dibincang adalah bahan elektrod, bilasan, dimensi electrode dan kedalaman pemotongan. Menganalisis pengaruh faktor telah mengguna pakai eksperimen faktoran lengkap. Grafit dan Tembaga digunakan sebagai elektrod untuk melakukan permesinan bahan kerja. Bilasan diperlukan di dalam EDM kerana menghakisan hakisan harus disingkirkan daripada celahan untuk mendapatkan pemotongan yang berkesan. Dua peringkat bilasan ditentukan, bagi peringkat bilasan yang rendah, bilasan tidak digunakan dan pada peringkat yang tinggi bilasan digunakan. Dimensi elektod untuk peringkat rendah ialah 10mm dan peringkat tinggi ialah 30 mm. Faktor kedalaman pemotongan ialah 10 mm pada preingkat rendah dan 20 mm pada peringkat tinggi. Kerosin atau minyak tanah digunakan sebagai cecair dielektrik. Kesan bagi bilasan dianalisis dan dibincangkan. Keputusan membuktikan bahawa bilasan amat diperlukan untuk mempengaruhi keputusan MRR dan Ra.

TABLE OF CONTENTS

CHAPTER 5 CONCLUSIONS

LIST OF TABLES

LIST OF FIGURES

LIST OF SYMBOLS

^{0}C	Degree Celsius
^{0}F	Degrees Fahrenheit
α	Alpha

LIST OF ABBREVIATIONS

EDM	Electrical Discharge Machining
MRR	Material Removal Rate
Ra	Surface roughness
DOE	Design of experiment
Cu	Copper
W	Tungsten
AISI	Alloy Steel
Si	Silicon
Mn	Manganese
Cr	Chromium
Ni	Nickel
Mo	Molybdenum
S	Sulphur
PL	Polarity
SV	Servo Voltage

CHAPTER 1

INTRODUCTION

1.1 ELECTRICAL DISCHARGE MACHINING

Electrical Discharge Machining (EDM) is one of the most accurate manufacturing process for creating complex or simple shape and geometries within parts and assemblies. EDM works by eroding material in path of electrical discharges that form an arc between an electrode tool and the work piece.

EDM system consists of a shape tool and the part. The part is connecting to a power supply. Sometimes to create a potential difference between the work piece and tool, the work piece is immersed in a dielectric (electrically non-conducting) fluid which is circulated to flush away debris.

EDM comes in two basic types: wire and probe (die sinker) Sinker EDM consists of electrode and workpieces that are submerged in an insulating liquid such as oil. The electrode and workpiece are connected to a suitable power supply. The power supply generates an electrical potential between the two parts. As the electrode approaches the workpiece, dielectric breakdown occurs in the fluid and a small spark jumps. The resulting heat and cavitations vaporize the base material, and to some extent, the electrode. These sparks strike one at a time in huge numbers at seemingly random locations across the electrode. As the base metal is eroded, and the spark gap subsequently increased, the electrode is lowered automatically by the machine so that the

process can continue uninterrupted. Several hundred thousand sparks occur per second in this process, with the actual duty cycle being carefully controlled by the setup parameters. The typical part geometry is to cut small or odd shaped angles. Vertical, orbital, vectorial, directional, helical, conical, rotational, spin and indexing machining cycles are also used.

1.2 IMPORTANCE OF RESEARCH

This research is significant because of several causes:-

(i) Analysis of the effect of EDM jet flushing setting on the machine.

(ii) Deciding decision in choosing the best parameter of EDM for the material removal rate (MRR) and surface roughing (Ra) result analysis.

1.3 PROBLEM STATEMENT

Improper flushing and electrode material would cause erratic cutting. This in turn increases machining time. Under certain machining conditions, the eroded particles attach themselves to the workpiece. This prevents the electrode from cutting efficiently. It is then necessary to remove the attached particles by cleaning the workpiece.

1.4 OBJECTIVE OF RESEARCH

There are some objectives of this research;

(i) To determine the effect EDM jet flushing setting on the machining of tool steel workpiece.

(ii) To optimize the parameter of electrode material, flushing, electrode dimension, and depth of cut that influence EDM performance.

(iii) To analysis the control parameters of EDM process for each of the machining characteristics i.e. material removal rate (MRR) and surface roughness (Ra).

1.5 SCOPE OF RESEARCH

The research is limited to:

(i) 2 condition of flushing which are without flushing (low level) and with flushing (high level).

(ii) 2 main control parameter for this study are Material Removal Rate (MRR) and Surface Roughness

1.6 RESEARCH METHODOLOGY

1.6.1 Literature Review

The electrical discharge machining (EDM) has gained importance due to its capability to remove material with good accuracy and precision. EDM accomplishes shapes that could hardly been achieved with any other conventional method, regardless the hardness of the material to be machined (Chryssolouris G, 2005).

Flushing is most important in EDM because eroded particle must be removed from the gap for efficient cutting. Flushing also brings fresh dielectric oil into the gap and cools the electrode and the workpiece (Reliable EDM, 2005).

The adequate selection of manufacturing conditions is one of the most important aspects to take into consideration in the die-sinking electrical discharge machining (EDM) of conductive ceramics, as these conditions are the ones that are to determine such important characteristics as: surface roughness, electrode wear (EW) and material removal rate (I. Puertas and C.J. Luis, 2001).

Proper flushing depends on the volume of oil being flushed into the gap, rather than the flushing pressure. High flushing pressure can also cause excessive electrode wear by making eroded particles bounce around in the cavity. Generally, the ideal flushing pressure is between 3 to 5 psi (Reliable EDM, 2005).

1.6.2 Flow Chart

The flow chart of this research is illustrated in figure 1.1 below:-

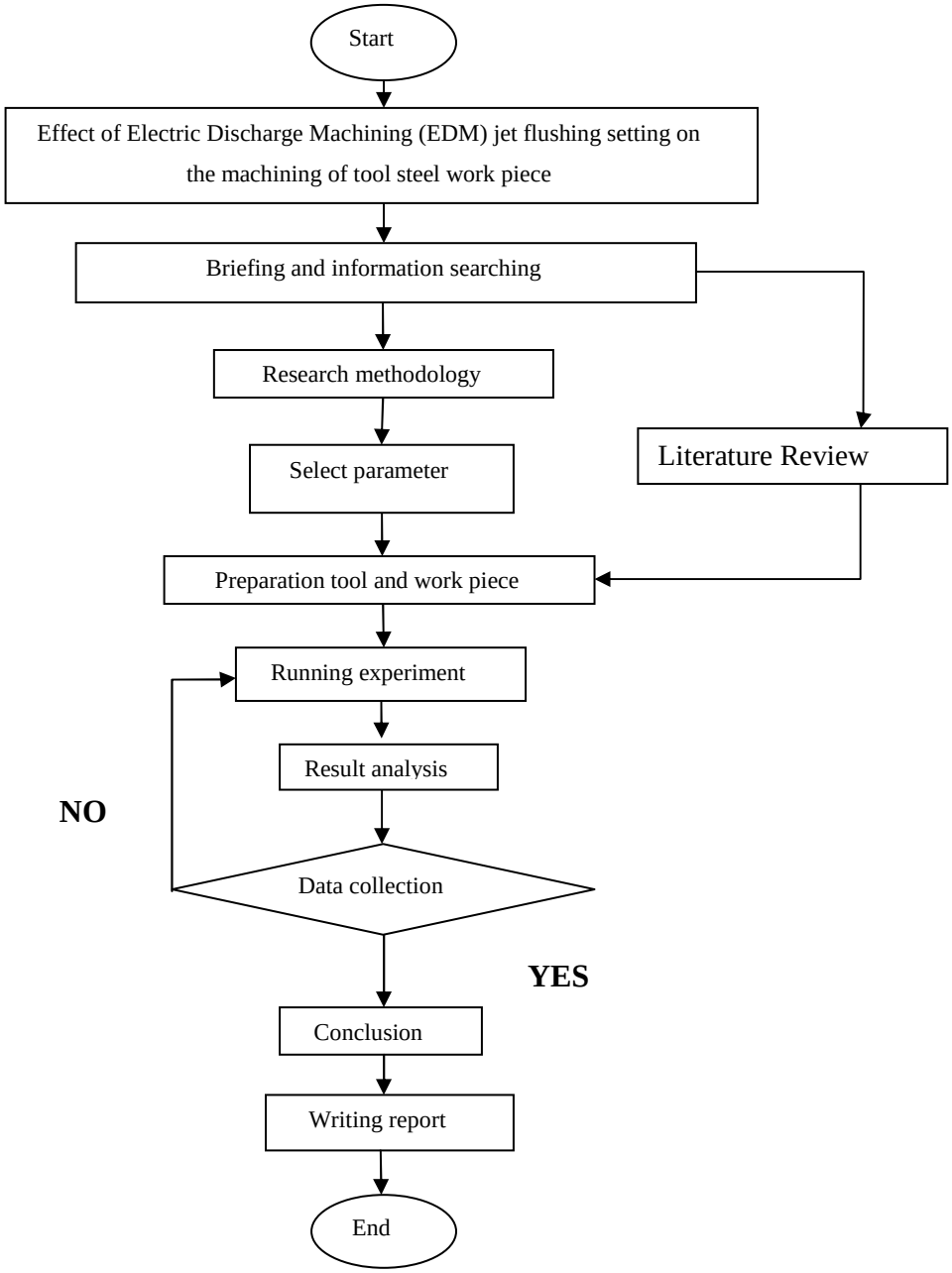

Figure 1.1: Flow Chart

1.6.3 Gantt Chart

Table 1.1: Gantt chart for Final Year Project 1

Week	**1**	**2**	**3**	**4**	**5**	**6**	**7**	**8**	**9**	**10**	**11**	**12**	**13**	**14**	**15**
Project Progress															
Title confirmation															
Set objective and scope															
Problem Statement															
Literature Review															
Research Methodology															
PSM 1 report															
PSM1 presentation															
Report/draft submitting for PSM 1															

Table 1.2: Gantt chart for FYP 2

Week **Project Progress**	**1**	**2**	**3**	**4**	**5**	**6**	**7**	**8**	**9**	**10**	**11**	**12**	**13**	**14**	**15**	**16**
Tool Preparation																
Preliminary																
Experiment Process																
Data Collection																
Data analysis																
PSM 2 report																
PSM 2 presentation																
Report/draft submitting for PSM 2																

CHAPTER 2

LITERATURE REVIEW

2.1 INTRODUCTION

Electrical discharge machining (EDM) is recognized as precision machining for high hardness materials as quenched carbon steel. The machinability of work piece materials in EDM is the function of the heat conductivity and the melting point of the materials. It does not depend on the hardness of the work piece. As for the electrical characteristics of the materials, the work piece of less than several tens Ω cm as specific resistance of work piece is allowed for the conventional EDM (Keong W, 1988).

Figure 2.1: Die Sinker EDM

Source: J.L. Johnson and R.M. German 1994

It is a machining method primarily used for hard metals or those that would be impossible to machine with traditional techniques. One critical limitation, however, is that EDM only works with materials that are electrically conductive (Wikipedia, 2009). It is one of the most accurate manufacturing processes available for creating complex or simple shapes and geometries within parts and assemblies (Keoning and Jutzler, 1977).

2.2 FLUSHING

Flushing is most important in EDM because eroded particle must be removed from the gap for efficient cutting. Flushing also brings fresh dielectric oil into the gap and cools the electrode and the work piece. The deeper the cavity will bring the greater the difficulty for proper flushing. Improper flushing would cause erratic cutting. This in turn increases machining time. Under certain machining conditions, the eroded particles attach themselves to the workpiece. This prevents the electrode from cutting efficiently. It is then necessary to remove the attached particles by cleaning the workpiece. The danger of arcing in the gap also exists when the eroded particles have not been sufficiently removed. Arcing occurs when a portion of the cavity contains too man eroded particles and the electric current passes through the accumulated particles. This arcing causes an unwanted cavity or cavities which can destroy the workpiece. Arcing is most likely to occur during the finishing operation because of the small gap that is required for finishing. New power supplies have been developed to reduce this danger (Reliable EDM, 2005).

2.3 PROPER FLUSHING

Proper flushing depends on the volume of oil being flushed into the gap, rather than the flushing pressure. High flushing pressure can also cause excessive electrode wear by making eroded particles bounce around in the cavity. Generally, the ideal flushing pressure is between 3 to 5 psi. (0.2 to 0.33 bars)

Efficient flushing required a balance between volume and pressure. Rough operations, where there is a much larger arc gap, require high volume and low pressure for the proper oil flow. Finishing operations, where there is a small arc gap, requires higher pressure to ensure proper oil flow.

Often flushing is not a problem in a roughing cut because there is a sufficient gap for the coolant to flow. Flushing problem usually occur during finishing operations. The smaller gap makes it more difficult to achieve the proper oil flow to remove the eroded particles (Dorf,R.C, and Kusiak, 1994).

2.4 JET FLUSHING

Jet or side flushing is done by tubes or flushing nozzles which direct the dielectric fluid into the gap (Figure 2.1). Pulse flushing is usually used along with jet flushing.

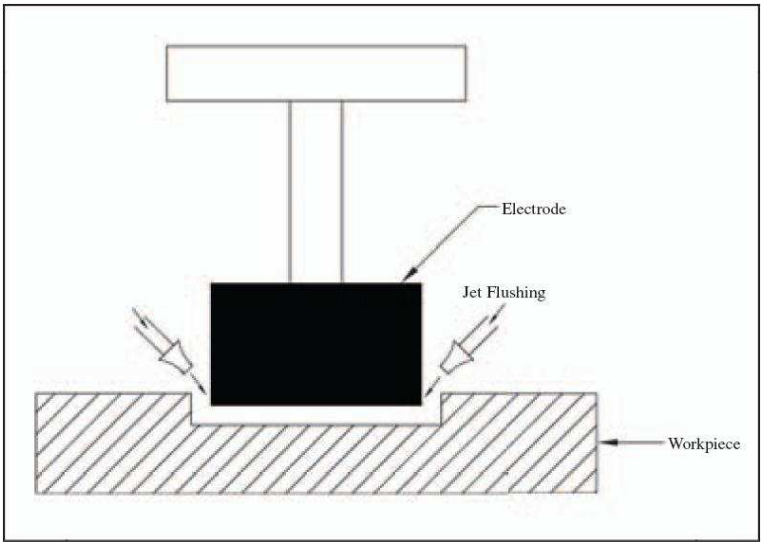

Figure 2.2: Jet Flushing

Source: Reliable EDM 2005

2.5 ELECTRODE MATERIAL

2.5.1 Electrode material properties that effect EDM:

(i) Electrical Conductivity

Electric current is our “cutting tool”, higher conductivity (or conversely, lower resistivity) promotes more efficient cutting.

(ii) Melting point

EDM is a thermal process, it would be logical to assume that the higher the melting point of the electrode material, the better the wear ratio will be between electrode and workpiece.

(iii) Structural Integrity

Even though EDM is often thought of as a “zero force” process, each individual spark is a very violent process on a microscopic scale, exerting considerable stress on the electrode material. How well the material responds to hundreds of thousands of these “attacks” on its surface, will be a significant factor in determining the electrode material’s performance regarding wear, surface finish, and ability to withstand poor flushing conditions.

(iv) Mechanical Properties

The mechanical properties most often measured for electrode materials are tensile strength, transverse rupture strength (if applicable), grain size (if

applicable) and hardness.These mechanical properties will affect both the fabrication of the electrode, and its performance in the EDM process.

(v) Manufacturability

The usefulness of an electrode material is partially determined by the difficulty of manufacturing useful electrodes from it. Such factors may include machinability, stability, Burr formation and removal.

2.5.2 Copper

With development of the transistorized, pulse-type power supplies, Electrolytic (or pure) Copper became the metallic electrode material of choice. This is because the combination of Copper and certain power supply settings enables low wear burning. Also, Copper is compatible with the polishing circuits of certain advanced power supplies. Many shops in both Europe and Japan still prefer to use Copper as the primary electrode material, due to their tool making culture that is averse to the “untidiness” of working with graphite. Due to its structural integrity, Copper can produce very fine surface finishes, even without special polishing circuits. This same structural integrity also makes Copper electrodes highly resistant to DC arcing in poor flushing situations. Copper is frequently used to make female electrodes on a Wire EDM for subsequent use in reverse burning punches and cores in the Sinker EDM. There are significant disadvantages associated with Copper electrodes. Copper electrodes will generally burn only half as fast as graphite electrodes, copper is a soft and gummy material to machine or grind, copper is an extraordinarily difficult material to de-burr. It can take longer to de-burr a Copper electrode than to manufacture it.

2.5.3 Graphite Electrode

Graphite is the preferred electrode material for 90% of all sinker EDM applications. Thus, it is important that we expend considerable effort to understand its properties and application to EDM. Graphite was introduced to the EDM industry approximately 50 years ago. One of the early well known brands of graphite was manufactured by General Electric, and known by the trade name of "Gentrode". Graphite is made from Carbon derived from petroleum. The powdered Carbon is mixed with a petroleum based binder material and then compacted. How the graphite is compacted in this stage of production is vitally important to its ultimate properties. All early graphites were made by compressing the powder/binder mixture in only one direction, resulting in properties or "grain" similar to wood, that varied relative to the direction of pressing. As an outgrowth of the space program, methods were developed to is statically press graphite such that its properties became "isotropic", that is the same in all directions. All high quality, high performance graphites are now manufactured this way. After compacting, the "green" compacted material undergoes a series of thermal treatments that convert the Carbon to graphite. Graphite has certain properties quite different than wrought metal based electrode materials:

Graphite has an extremely high melting point. Actually, graphite does not melt at all, but sublimes directly from a solid to a gas (just as the Carbon Dioxide in dry ice) at a temperature thousands of degrees higher than the melting point of Copper. This resistance to temperature makes graphite an ideal electrode material.

Graphite has significantly lower mechanical strength properties than metallic electrode materials. It is neither as hard, as strong, nor as stiff as metallic electrode materials. However, since the EDM process is one of relatively low macro mechanical forces, these property differences are not often significant (Roger K, 2008).

2.6 WORKPIECE

P20 are tool steels commonly used in the manufacturing of polymer injection Moulds.

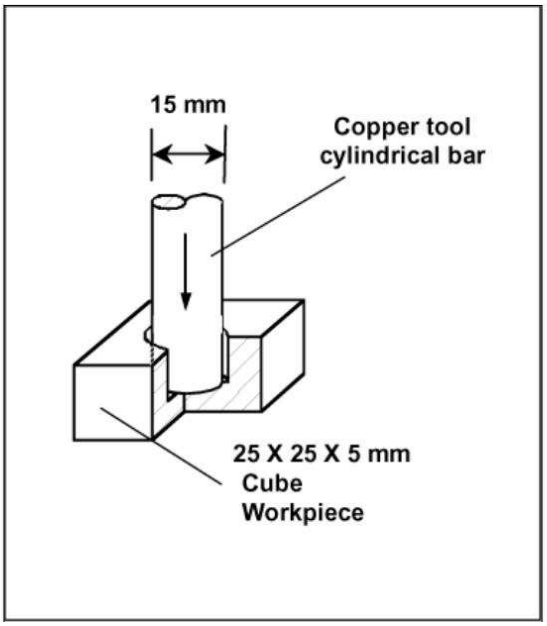

Figure 2.3: Workpiece and Electrode

Source: Preciado W. T. 2006

The materials normally used in EDM electrodes are various types of copper, graphite, tungsten, brass and silver. The materials normally used in EDM electrodes are various types of copper, graphite, tungsten, brass and silver. Copper–tungsten (Cu–W) electrodes have been used widely to machine die steel and tungsten carbide work-pieces owing to the high thermal conductivity of Cu, and the better spark erosion resistance, low thermal expansion coefficient and high melting temperature of W. Cu is the most versatile material with excellent electrical and thermal conductivity, one of the major commercial metals. Cu–W electrodes have been used widely for machining die steel and tungsten carbide work-pieces owing to the high thermal conductivity of Cu, and the better

spark erosion resistance, low thermal expansion coefficient and high melting temperature of W (A. Arthur, P.M. Michael and R.C. Cobb, 1996).

2.7 EFFECTS OF FLUSHING

Improper flushing can result in uneven and significant tool wear affecting accuracy and surface finish: it can also reduce removal rates due to unstable machining condition and arcing around region with high concentration of debris. Whilst there is much literature on the influence of flushing on machining rate, tool wear and accuracy of profile produced, little is known about its influence on the hole taper of the electric discharge machine (EDM) components (R.B Ross, 1992).

2.8 EFFECTS OF ELECTRODE MATERIAL

Micro electro discharge machining is an important unconventional metal micromachining technology. The performance of micro EDM depends on the combination of the tool and work materials used. In the absence of a comprehensive theoretical model to predict the effect of electrode materials on the performance of EDM, experimental investigations as described in this paper become useful. The work materials studied include ferrous, non-ferrous and exotic material (XW42, Ti6Al4V, WC) and the tool electrode materials include the commonly used EDM tool materials namely tungsten, copper and graphite. It is found that in the microgroove machining by micro EDM using foil electrodes, graphite consistently provides higher material removal rate than tungsten and copper tool electrodes and hence it is useful for the rough machining. On the other hand tungsten tool electrode is preferable for finish machining as it provides the least surface roughness (Preciado W. T.,2006).

CHAPTER 3

RESEACH METHODOLOGY

3.1 INTRODUCTION

In order to achieve the objective and the scopes of this process a sequence of works have been planned. The sequences are conducting literature review, conduct experiments and use the result from the experiments to perform analysis of the effect of EDM jet flushing and electrode material on the machine.

3.2 EXPERIMENTAL TOOLS

3.2.1 Electrical Discharge Machine

This machine has become a basic machining method for the manufacturing industries of aerospace, automotive, nuclear, medical, and die-mold production. The experiment will be done using this machine which is type of Sodick AQ55L. The most important function of this machine is the flushing pressure. This is because flushing pressure was used to vary the pressure from low to high pressure to achieve the objective of this project**.**

Figure 3.1: EDM Sodick AQ55L

3.2.2 Workpiece Material

Alloy steel is a steel to which one or more alloying elements other than carbon have been deliberately added (e.g. chromium, nickel, molybdenum) to achieve a particular physical property (Preciado W.T, 2006).

Applications of Alloy Steel AISI P20, GRADE 1.2738:

(i) Injection moulds for thermoplastics

(ii) Extrusion dies for thermoplastics

(iii) Blow moulds

(iv) Forming tools, press-brake dies (possibly flame hardened or nitrided)

(v) Aluminium die casting prototype dies

(vi) Structural components, shafts

Table 3.1: Specification of Alloy Steel AISI P20

Approx. analysis %	C	Si	Mn	Cr	Ni	Mo	S
(Chemical composition)	0.37	0.3	1.4	2.0	1.0	0.2	<0.010
Standard spec.	AISI P20 modified						
Delivery condition	Hardened and tempered to 290–330 HB						
Colour code	Yellow/green						

Source: Preciado W.T. 2006

3.2.3 Electrode Material

Table 3.2: Electrode Materials

Electrolytic copper	**density**	**Electrical resistivity**	**purity**	**Melting point**
	8.9 kg/dm^3	0.0167 Ωmm^2/m	99.8%	1083 °C
Isotropic graphite	**density**	**Electrical resistivity**	**Grain size**	**Melting point**
	1.83 kg/dm^3	12.5 Ωmm^2/m	7 μm	3675°C

Source: P.M. Lonardo and A.A. Bruzzone journal 1999

For the electrode preparation, the raw material using is Copper and Graphite in rod shape will be cut into 16 portion with their dimension is 10 mm and 30 mm for diameter and 50 mm length

3.2.4 Surface Roughness Perthometer

Figure 3.2: Surface Roughness Perthometer

Concept of Perthometer (Mahr, 2005):

(i) The modular computer controlled station for measuring and analysis of roughness, contour and topography in combination or independently.

(ii) Wide choice of drive units & pickups with tip radius of 2 micron and measuring force less than 0.8mN. Option to use non-contact laser pickups.

(iii) Windows'98 based software.

(iv) Widest range of measurement for contour with PCV drives 200 mm in X-axis and 50 mm in Z-axis.

(v) Real time profile representation during measurement.

(vi) Menu driven representation of the stations configuration giving quick and easy reference to the current settings and parameters.

3.2.5 Dielectric Fluid

The main function of the dielectric fluid are to insulate the gap before high energy is accumulate to concentrate the discharge energy to a tiny area, to cover the gap condition after the discharge, and to flush away the discharge products. The two most commonly used dielectric fluids are petroleum-based hydrocarbon mineral oil and deionized water. The oil should have high flash point and proper viscosities. High insulation, high density and high viscosity oils have the positive effects of concentrating the discharge channels and the discharge energy, but they may have difficulty flushing away the discharge products. For common EDM operations, kerosene is widely used with different additive (Dorf, R.C. and Kusiak, 1994).

The dielectric fluid flushes the metal particles out of the working gap maintain ideal cutting conditions, increase metal removal rate, improve machining conditions, and reduce machining time and costs. The dielectric fluid must be filtered and circulated under constant pressure in order to be effective (Krar and S.F Gill, 2002).

In this experiment, kerosene will be use as the dielectric fluid. Kerosene is a thin, clear liquid formed from hydrocarbons, with density of 0.78-0.81 g/cm^3. Kerosene is obtained from the fractional distillation of petroleum between 150 ^{o}C and 275 ^{o}C, resulting in a mixture of carbon chains containing 12 to 15 carbon atoms (Wikipedia, 2009).

3.3 PARAMETERS

There are electrical and non electrical parameters were used in this experiment. The electrical parameters which will be set as constant are:

(i) Polarity (PL)
(ii) Servo Voltage (SV)
(iii) Electric Discharge Peak Current (IP)
(iv) Pulse on duration (ON)
(v) Pulse off duration (OFF)

The non-electrical parameters that will be varied are:

(i) Electrode material
(ii) Flushing
(iii) Depth of cut
(iv) Electrode size

3.3.1 Experimental EDM Condition

Finishing and roughing regimes were considered separately. In each experiment the four factors were examined at two levels only; therefore 2^4 treatments were required. The main effect of the factors and their interactions were examined with reference to the considered responses material removal processing rate, and surface roughness.

Table 3.3: Experimental electrical setting condition

Electrical setting	Measurement
Polarity	+
Pulse Current	50A
Pulse on duration	175 μs
Pulse off duration	55 μs
Serve Voltage	55V

Table 3.4: Experimental control parameters

	Factor	Low	High
A	Electrode material	Graphite	Copper
B	Flushing	No	Yes
C	Depth of cut	10 mm	20 mm
D	Electrode size	10 mm	30 mm

3.3.2 Type of experiment

The identification of factors that control variability and target can be accomplished by experimentation. Experiments can be conducted in many ways including:

(i) Full factorial

(ii) Greco Latin squares

(iii) Placket Burman designs and

(iv) Orthogonal arrays

A full factorial design of experiment (DOE) measures the response of every possible combination of factors and factor levels. These responses are analyzed to provide information about every main effect and every interaction effect. A full factorial DOE is practical when fewer than five factors are being investigated. Testing all combinations of factor levels becomes too expensive and time-consuming with five or more factors (Belavendram, 2005).

In each experiment the four factors were examined at two levels only, therefore 2^4 treatments were required.

The $L_{16}(2^4)$ full factorial,

(i) Number of factor is 4

(ii) Number of levels for each factor is 2

(iii) Number of observation is 16

Table 3.5: Full factorial arrangement

No of exp.	**Electrode material**	**Flushing**	**Depth of Cut (mm)**	**Electrode Size (mm)**	**MRR (mm3/min)**	**Ra (µm)**
1	Graphite	No	10	10		
2	Copper	No	10	10		
3	Graphite	Yes	10	10		
4	Copper	Yes	10	10		
5	Graphite	No	20	10		
6	Copper	No	20	10		
7	Graphite	Yes	20	10		
8	Copper	Yes	20	10		
9	Graphite	No	10	30		
10	Copper	No	10	30		
11	Graphite	Yes	10	30		
12	Copper	Yes	10	30		
13	Graphite	No	20	30		
14	Copper	No	20	30		
15	Graphite	Yes	20	30		
16	Copper	Yes	20	30		

3.4 EXPERIMENT PROCEDURE

3.4.1 Workpiece and Electrode Preparation

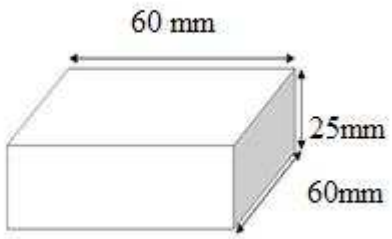

Figure 3.3: Dimension of Workpiece

The raw material using is Alloy Steel AISI P20 in form of block shape will be cut into 16 portions to use in the experiment. The dimension of the workpiece is 25 mm x 60 mm x 60 mm as shown in Figure 3.3

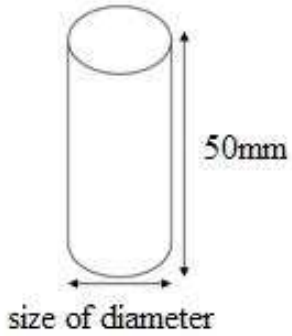

Figure 3.4: Dimension of Electrode

. The workpieces and electrode is cut by using EDM Wire Cut Sodick AQ55L machine based on the standard parameters setting. The Wire EDM cutting uses an electrically charged thin brass wire to slice through metal. The wire EDM cutting advantages include cutting intricate shape and tight radius contours.

3.4.2 Machining EDM Process

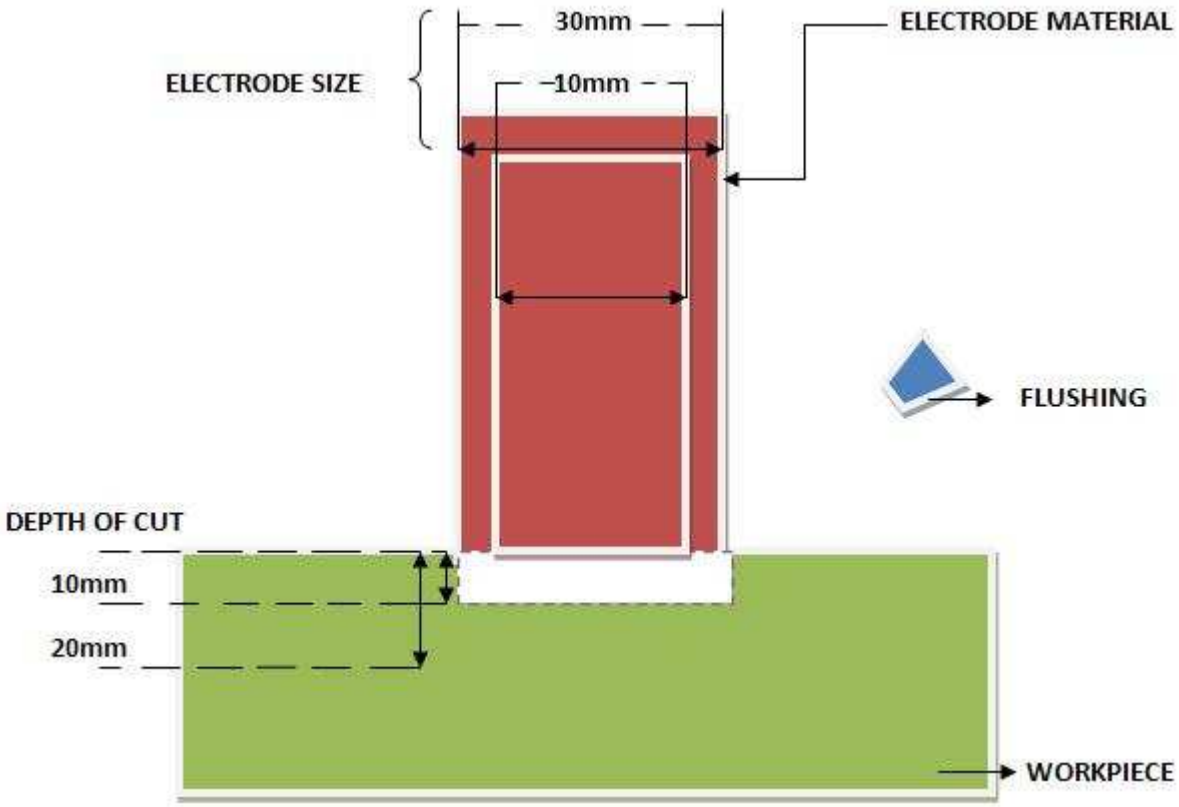

Figure 3.5: Machining EDM process

An experimental analysis was carried out on a Alloy Steel AISI P20 for die casting by using both copper and graphite electrodes. Roughing and finishing operations were considered, by adopting for each condition the parameters commonly recommended in industrial production.

3.5 ANALYSIS PROCESS

3.5.1 Material Removal Rate (MRR)

For analysis the MRR, before running the process we need to measure the weight of workpiece and also take the weight after cutting process. The difference of the weight of the workpiece must be dividing with the machining time taken during cutting process (I. Puertas, C.J Luis and L. Alvarez, 2004).

The following equation is used to determine the MRR value is expressed as in Eq. (3.1);

$$MRR = \frac{\text{volume of material removed from the part}}{\text{time machining}} \tag{3.1}$$

$$MRR = \frac{W_b - W_a}{t_m}$$

where:$_b$

W_b = weight of workpiece material before machining (g)

W_a = weight of workpiece material after machining (g)

t_m = machining times (min)

Maximum of MRR is an important indicator of the efficiency and cost effectiveness of the EDM process, however increasing MRR is not always desirable for all applications since this may scarify the surface integrity of the workpiece. A rough surface finish is the outcome of fast removal rates.

3.5.2 Surface Roughness (SR)

For the analysis surface roughness, the Surface Roughness Perthometer is using to get the reading of the surface of the workpiece.

CHAPTER 4

RESULTS AND DISCUSSIONS

4.1 RESULTS ANALYSIS

Table 4.1 shows the result for material removal rate (MRR) and surface roughness (Ra) which being machine by EDM die-sinking and that has been analyzed by using Minitab 15 statistical software full factorial

Table 4.1: Result from experiment

No of exp.	Electrode material	Flushing	Depth Cut (mm)	Electrode Size (mm)	MRR (mm3/min)	Ra (µm)
1	Graphite	No	10	10	11.1	2.93
2	Copper	No	10	10	18.5	1.98
3	Graphite	Yes	10	10	23.7	2.68
4	Copper	Yes	10	10	31.8	2.25
5	Graphite	No	20	10	10.1	2.47
6	Copper	No	20	10	16.3	2.04
7	Graphite	Yes	20	10	21.6	2.85
8	Copper	Yes	20	10	34.3	1.86
9	Graphite	No	10	30	97.8	2.36
10	Copper	No	10	30	142.8	2.06
11	Graphite	Yes	10	30	157.4	2.58
12	Copper	Yes	10	30	151.3	1.90
13	Graphite	No	20	30	81.8	2.31
14	Copper	No	20	30	123.3	1.82
15	Graphite	Yes	20	30	152.2	2.57
16	Copper	Yes	20	30	157.4	1.94

Table 4.2: Analysis by Minitab

No. of Exp.	MRR (mm3/min)	Ra (µm)	predit for MRR	Predit for Ra
1	11.1	2.93	1.513	2.7025
2	18.5	1.98	16.513	2.0900
3	23.7	2.68	30.013	2.7850
4	31.8	2.25	45.013	2.1725
5	10.1	2.47	-3.162	2.5925
6	16.3	2.04	11.838	1.9800
7	21.6	2.85	25.338	2.6750
8	34.3	1.86	40.338	2.0625
9	97.8	2.36	113.587	2.5125
10	142.8	2.06	128.587	1.9000
11	157.4	2.58	142.087	2.5950
12	151.3	1.90	157.087	1.9825
13	81.8	2.31	108.912	2.4025
14	123.3	1.82	123.912	1.7900
15	152.2	2.57	137.412	2.4850
16	157.4	1.94	152.412	1.8725

4.2 DISCUSSIONS ANALYSIS

Four main factor and interaction factor had been analyzed to verify which one among factor had most influence effect. The most importance is effect by flushing to the side factor and influencing of flushing to MRR and Ra. To realize the analysis there are three type of analysis to be consider:

(i) The p-value

The p-value (P) is used to determine which of the effects in the model are statistically significant. To use the p-value, it needs to identify the p-value for the effect to evaluate and compare this p-value to α-level. A commonly used α-level is 0.05

(ii) The main effect plot

The main effect is used to visualize the effect of the factors on the response and to compare the relative strength of the effects. A main effect is present when the change in the mean response across the levels of a factor is significant.

If the line is horizontal (parallel to the x-axis), there is no main effect present. The response mean does not change depending on the factor level.

If the line is not horizontal (parallel to the x-axis), there may be a main effect present. The response mean does change depending on the factor level. Greater the slope of the line, the stronger the effect. Make sure to determine whether the factor is significant.

(iii) Interaction plot

The interactions plot is used to visualize the interaction effect of two factors on the response and to compare the relative strength of the effects. Minitab draws an interactions plot for two factors, or a matrix of plots for three or more factors. An interaction is present when the change in the response mean from the low to the high level of a factor depends on the level of a second factor.

If the lines are parallel to each other, there is no interaction present. The change in the response mean from the low to the high level of a factor does not depend on the level of a second factor.

If the lines are not parallel to each other, there may be an interaction present. The change in the response mean from the low to the high level of a factor depends on the level of a second factor. The greater the degree of

departure from being parallel, the stronger the effect. Make sure to determine whether the interaction is significant.

4.2.1 P-VALUE

(i) P-value for MRR

Table 4.3: Result effect and P-value for MRR

Term	Effect	P	Effect type
Electrode Material	15.000	0.048	Significant
Flushing	28.500	0.004	Significant
Depth of Cut	-4.675	0.453	Not Significant
Electrode Size	112.075	0.000	Significant
EleMate*Flush	-10.025	0.141	Not Significant
EleMate*DoCut	1.400	0.871	Not Significant
EleMate*ESize	6.400	0.316	Not Significant
Flush*DoCut	5.000	0.424	Not Significant
Flush*ESize	14.650	0.051	Not Significant
DoCut*ESize	-3.975	0.520	Not Significant

Table 4.3 show the p-value result of MRR for main and interaction factor. Flushing can be conclude that the effect is significant by p-value is o.oo4 which is less than to α. However electrode size had been major effect compare to other and another one effect factor significant is electrode size, 0.048. Depth of cut is not significant because its p-value is over than o.o5. The interaction effects are not significant.

(ii) P-value for Ra

Table 4.4: Effect and p-value for Ra

Term	Effect	P	Effect type
Electrode Material	-0.6125	0.001	Significant
Flushing	0.0825	0.411	Not Significant
Depth of Cut	-0.1100	0.285	Not Significant
Electrode Size	-0.1900	0.094	Not Significant
EleMate*Flush	-0.0700	0.481	Not Significant
EleMate*DoCut	-0.0225	0.816	Not Significant
EleMate*ESize	0.0875	0.385	Not Significant
Flush*DoCut	0.0625	0.527	Not Significant
Flush*ESize	0.0275	0.777	Not Significant
DoCut*ESize	0.0450	0.645	Not Significant

Table 4.4 is combination between main effect and interaction to analyze p-value and effect to categorize effect type by significant or not. Surface roughness is looking difference to MRR by number of significant because the only one of main factor is lower than 0.05. In case study of flushing, flushing is not significant based on p-value 0.411 higher than 0.05.

4.2.2 The main effect plot

Main effect plot for MRR

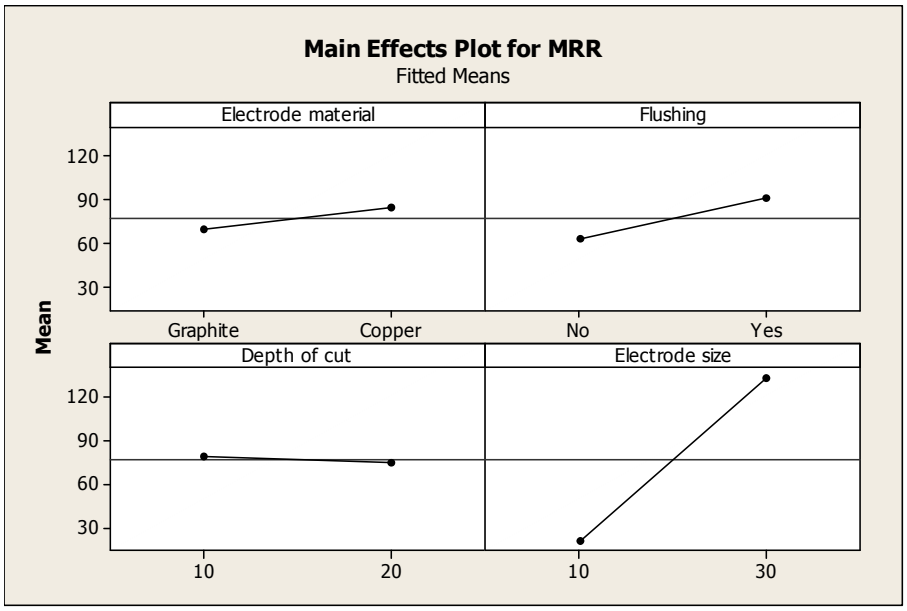

Figure 4.1: Graph main effect plot for MRR

The figure 4.1 shows the graph electrode material, flushing, depth of cut and electrode size effect plot for MRR. The overall mean MRR is 76.96 plotted across. For the MRR data, the plots of the fitted means indicate the following:

(i) **Electrode material:** copper electrode produced higher value of MRR than graphite electrode.

(ii) **Flushing:** The value of MRR is higher by using flushing than without using flushing.

(iii) **Depth of cut:** Low setting for depth of cut (10 mm) produced higher value of MRR than high setting (20 mm)

(iv) **Electrode size:** high setting (30 mm) of electrode size produced higher value of MRR than low setting (10 mm).

The earlier analysis in the example for Analyze Factorial Design indicated that three main effects were significant at the 0.05 a-level, the relative magnitude of the factor effects can be compare by comparing the slopes of the lines on the plots. These plots show that there does seem to be a large difference in the magnitude of the effects with electrode size being the largest followed by flushing, electrode material and depth of cut.

Main effect plot for Ra

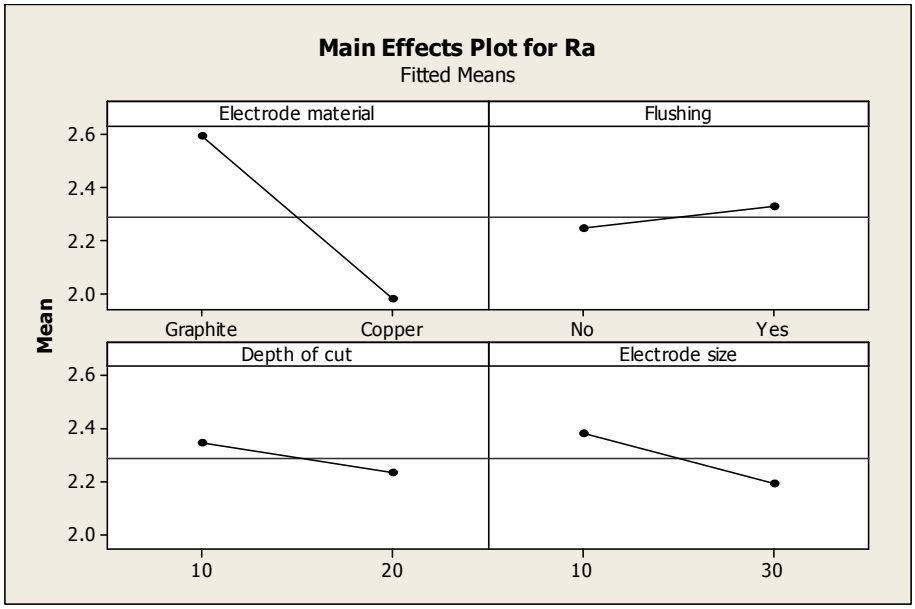

Figure 4.2: Graph main effect plot for Ra

The figure 4.1 shows the graph electrode material, flushing, depth of cut and electrode size effect plot for Ra. The overall mean Ra is 2.287 plotted across. For the Ra data, the plots of the fitted means indicate the following:

(i) **Electrode material:** copper electrode produced lower value of Ra than graphite electrode.

(ii) **Flushing:** The value of Ra is higher by using flushing than without using flushing.

(iii) **Depth of cut:** Low setting for depth of cut (10 mm) produced higher value of Ra than high setting (20 mm)

(iv) **Electrode size:** high setting (30 mm) of electrode size produced lower value of Ra than low setting (10 mm).

The earlier analysis in the example for Analyze Factorial Design indicated that all four main effects were significant at the 0.05 a-level. By comparing the slopes of the lines on the plots, the result can be compared the relative magnitude of the factor effects. These plots show that there does seem to be a large difference in the magnitude of the effects with electrode material being the largest followed by electrode size, depth of cut and flushing.

4.2.3 Interaction plot

Interaction plot for MRR

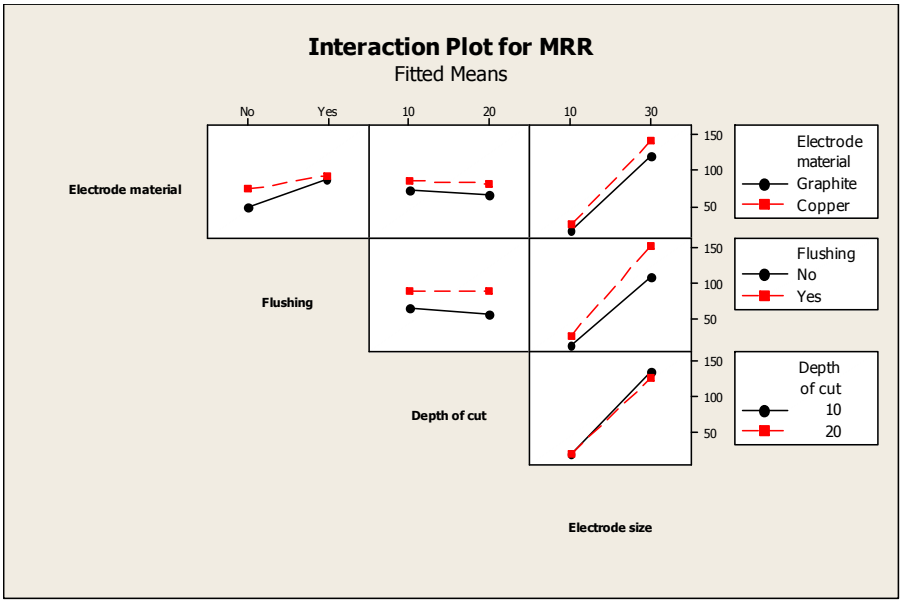

Figure 4.3: Graph interaction for MRR

Figure 4.3 show the graph interaction among factors that influence the material removal rate. My analysis is limited to interact between flushing and others factor. Interaction 1 is consider between flushing and electrode material, interaction 2 is between flushing and depth of cut and interaction 3 is between flushing and electrode size.

Table 4.5: Interaction effect for MRR

Interaction effect MRR with flushing		Observation	Effect	p-value
1	Electrode material	1. Not parallel 2. Interaction present	-10.025	0.141
2	Depth of Cut	1. Parallel 2. No Interaction present	5.00	0.424
3	Electrode Size	1. Not parallel 2. Interaction present	14.65	0.051

All type interaction are not significant because over than the p-value, 0.05. However, from the table 4.5, the influence between interactions can be decided. According the figure 4.3, the greater degree of departure from being parallel, the interaction 3 is higher than interaction 1 and interaction 1 is higher than interaction 2.

The interactions 3 is visualize the interaction effect of flushing and electrode size factors on the response and to compare the material removal rate of the effects. Electrode size play main role in cutting the workpiece because the greater size electrode is mean higher rate cutting in 60 s time. This situation would be related with area surface interact with

workpiece. Combination with flushing will increase cutting workpiece rate because flushing had function to remove eroded particle on workpiece during machining.

Interaction between electrode material and flushing (Interaction 1) shows the second larger effect of MRR. Interaction 1 had prove that copper is better graphite. Copper (8.9 kg/dm^3) had higher density compare to graphite (1.83 kg/dm^3). High density is need to cutting the workpiece, higher density is better than lower. Another influence factor would be considered is material's electrical resistivity. Lower electrical resistivity is importance in material selection. Comparing copper and graphite, copper (0.0167 Ωmm^2/m) had lower electrical resistivity than graphite (12.5 Ωmm^2/m).

Interaction 2 had showed no interaction present because the line is parallel. However, from the figure 4.3 the flushing is needed in each of combination factor to get better effect of MRR.

Interaction plot for Ra

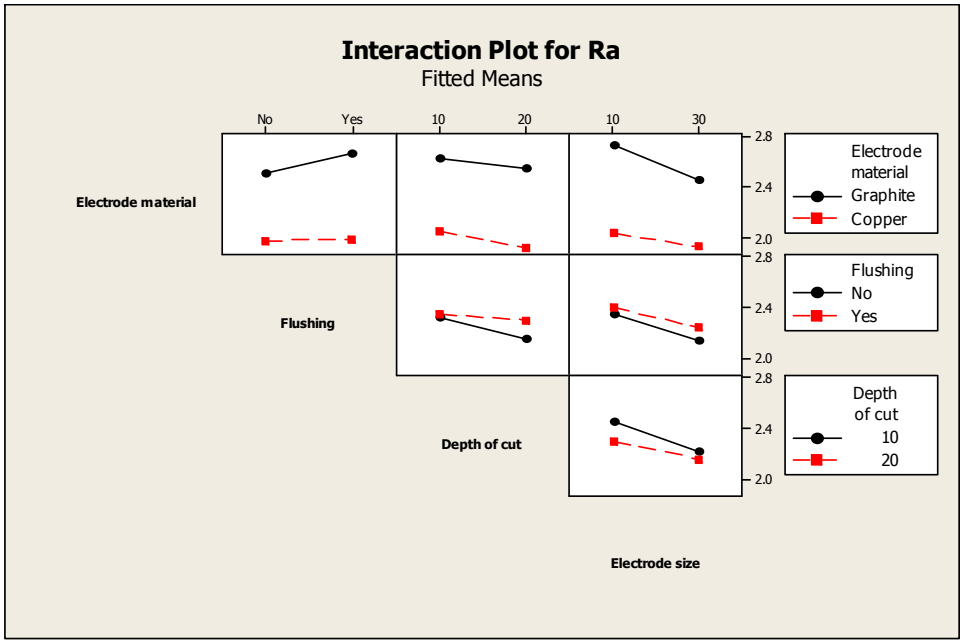

Figure 4.4: Graph interaction plot for Ra

Figure 4.4 show the graph interaction among factors that influence the surface roughness. Interaction 1 is consider between flushing and electrode material, interaction 2 is between flushing and depth of cut and interaction 3 is between flushing and electrode size.

Table 4.6: Interaction effect for Ra

	Interaction effect Ra with flushing	Observation	Effect	p-value
1	Electrode material	1. Not parallel 2. Interaction present	-0.07	0.481
2	Depth of Cut	1. Not parallel 2. Interaction present	0.0625	0.527
3	Electrode Size	1. Not parallel 2. Interaction present	0.0275	0.777

All type interaction are not significant because over than the p-value, 0.05. According the figure 4.4, the greater degree of departure from being parallel, the interaction 1 is higher than interaction 2 and interaction 2 is higher than interaction 3. Lower surface roughness is better than high.

For the interaction 1, Combination copper and flushing show better effect of Ra compare to graphite. Copper electrode had higher density and lower electrical resistivity than graphite electrode. Interaction 1 at low level flushing has a good result than high level. Flushing give height surface roughness effect

For the interaction 2, depth of cut interact to low level flushing show lower height of surface, high level of DOC is better than low level and the interaction is present between factor.

For the interaction 3, the interaction is present between electrode sizes and flushing, high level of electrode size is better than low level and the best Ra result is low level flushing and high level electrode.

CHAPTER 5

CONCLUSIONS

5.1 CONCLUSIONS

Electrical Discharge Machining (EDM) die-sinking is an accurate manufacturing process for creating complex or simple shape and geometries within parts and assemblies. EDM works by eroding material in path of electrical discharges that form an arc between an electrode tool and the work piece. Sometimes to create a potential difference between the work piece and tool, the workpiece is immersed in a dielectric (electrically non-conducting) fluid which is circulated to flush away debris.

Flushing is necessary in EDM to remove eroded particle from the gap for efficient cutting. Improper flushing would cause erratic cutting. This situation will turn increases machining time.

The parameters been used e.g. electrode material, flushing, depth of cut and electrode size. The graphite and copper had been selected as electrode material and alloy steel P20 as workpiece. Material removal rate and surface roughness had been analyzing using Minitab 15 Statistical Software by chosen Design of Experiment Factorial.

The electrical discharge machine die-sinking was successfully used to prove that flushing is very importance during machining to get a good result of material removal rate (MRR) and surface roughness (Ra). MRR and Ra are importance measurement to be

discussing because levels of quality of product are depending on this measurement. Higher rate of material remover and lower height of surface roughness is our target production. In my case situation, analysis by flushing show that measurement for MRR is higher but for Ra is also higher. Optimizing parameter between MRR and Ra was supposed that experiment 16 had been selected. The measurement for MRR and Ra are 159.138mm3/min and 1.937 μm, which are the best parameters copper as electrode, using flushing, 20 mm for depth of cut and 30 mm for electrode size.

5.2 RECOMMENDATIONS FOR FUTURE WORKS

Recommendation for further of flushing setting for next experiment are considered:

i. Angle position for flushing
ii. Pressure setting on flushing
iii. Type dielectric fluid
iv. Volume quantity of flushing

REFERENCES

This guide is prepared based on the following references;

Chryssolouris G. 2005. Manufacturing systems-Theory and practice.2nd (ed.), Springer, Berlin

Reliable EDM. 2005. Small Hole EDM Drilling. Information From Complete EDM Handbook. Provided Free by Reliable EDM. Chapter 14.

I. Puertas, C.J. Luis, A study on the machining parameters optimisation of electrical discharge machining, in: J.M. Torralba (Ed.), Proceedings of the International Conference on Advanced Materials and Processing Technologies (AMPT), Leganés, Spain, 2001, page 1173–1180

Westmoreland Mechanical Testing & Research, Ltd. Surface Roughness. http://www.wmtr.co.uk/Content/Surface _Roughness.htm (30 March 2009)

Chen, S.L. and Hsu, Q.C.2003. Studies on Electric-Discharge machining of non-contact seal face grooves. *Journal of Material Processing technology*. Page 363-367

Bruyn, D.H.E. 1970. Some Aspect of the Influence of Gap Flushing on the Accuracy in Finishing by Spark Erosion. Annals of the CIRP. 18:147-151

Crookall, J.R. and Lee, P.W. 1974. Some Effect of Debris Concentration on Erosion and Electrode Wear in Electro-Discharge Machining. *Proceeding of the Fifteenth Machine Tool Design and Research Conference,* Birmingham. Page 385-390.

Wells, P.W. and Willey, P.C.T. 1975. The Effect of Variation in Dielectric Flow Ratein the Gap on Wear Ratio and Surface Finish during Electro-discharges. *Proceeding of IEE Conference,* No. 133. U.K. page 110-117

Koening, L.W., Weill, R., Wertheim, R. and Jutzler, W.I. 1977. The Flow Fields in the Working Gap with Electro-discharge Machining, Annal of the CIRP. Vol.25. No.1. Page 71-76

Reliable EDM.2005. Dielectric Oil and Flushing for Ram EDM. Information From Complete EDM Handbook. Provided Free by Relioable EDM. Chapter 12. http://www.reliableedm.com

Wikipedia. 2009. Electric Discharge Machining, *Wikipedia, the free encyclopedie.* Wikimedia Foundation, Inc. http://en.wikipedia.org/wiki/Electrical_discharge_machining (30 March 2009)

EngineerEdge. 2009. Electric Discharge Machining, *Design Consideration Process Capabilities*. http://www.engineersedge.com/edm.shtml (30 March 2009)

Peças P, Henriques E., Pereira B., Lino M., Silva M. 2006. Fostering the use of welding technology in the mould repair. RPD 2006 – Building the Future by Innovation.

J.L. Johnson and R.M. German, 1994. Chemically activated liquid phase sintering of tungsten–copper. *Int. J. Powder Metall*, page 91–102.

R.B. Ross, 1992 Metallic Materials Specification Handbook, 4th Edition, Ross Materials Technology, East Kilbride, Glasgow, page 606–607.

W.-F. Wang, 1997 Effect of tungsten particle size and copper content on working behaviour of W–Cu alloy electrodes during electro discharge machining. *Powder Metall*, page 295–300.

Wikipedia. 2009. Kerosene, *Wikipedia, the free encyclopedie.* Wikimedia Foundation, Inc. http://en.wikipedia.org/wiki/Kerosene (30 March 2009)

Dorf, R.C. and Kusiak, A. 1994. *Handbook Design, Manufacturing, and Automation* . New York. Vol 26. Page 217

Krar, S.F Gill, A.R. p. cm. Exploring Advance Manufacturing Technology. Electrical Discharge Machining. First Edition. Page 6.2.1-6.3.1.

Preciado W. T., Bohorquez C. E. N. 2006. Polymer injection molds manufactured in AISI P20 steels. Journal of Materials Processing Technology, page 244-250.

Colaço R., Vilar R. 2004 *Copper Tungsten.* Materials Science and Engineering, page 123–127

Belavendram, N. 2005. *Robust Design*. Kuala Lumpur: University of Malaya. Page 30

A. Arthur, P.M. Michael and R.C. Cobb, 1996. Using rapid prototyping to produce electrical discharge machining electrodes. *Rapid Prototyping J*, page 4–12

J.R. Davis, 1998 Metals Handbook, Desk Edition, 2nd Edition, page 506–507.