Development of A Network DEA Model To Measure Production Line's Performance: A Conceptual Paper

N.A.M.A.Zainal
Faculty of Technology, Engineering, Universiti Malaysia Pahang,
Lebuhraya Tun Razak, 26300 Gambang, Kuantan, Pahang, Malaysia

M.A.Mansor
Faculty of Technology, Engineering, Universiti Malaysia Pahang,
Lebuhraya Tun Razak, 26300 Gambang, Kuantan, Pahang, Malaysia

S.N.M.Saffe
Faculty of Technology, Engineering, Universiti Malaysia Pahang,
Lebuhraya Tun Razak, 26300 Gambang, Kuantan, Pahang, Malaysia

***Abstract*—Production line in manufacturing industry usually is made up of several processes and must go through performance measurement to determine whether they are efficient or inefficient. The extended DEA model which is the Network DEA is developed to look inside the DMU and find the source of inefficiency of each sub DMUs. Our goals of developing the Network DEA model on the production line are to identify the inputs and outputs required and to consider the relationship and connection between each of the processes in the production line and thus measure the performance of the entire production line. The expected outcome of this paper is to propose a conceptual model that can be used for performance measurement in manufacturing production line.**

Keywords—Performance Measurement; Network Data Envelopment Analysis (NDEA); Manufacturing System

I. INTRODUCTION

Data Envelopment Analysis (DEA) is a non parametric technique for measuring efficiencies of Decision Making units (DMUs) which use common inputs to produce common outputs. DMU is said to be 100% efficient if none of the outputs can be increased without either increasing one or more inputs; or decreasing some of the other outputs and vice versa [1]. The DEA model was first developed by Charnes et al. (1978) and widely used to measure the performance of DMUs that converts multi-inputs into multi-outputs, such as bank performance, company performance, hospital web security, production planning, energy consumption, productivity, bankruptcy assessment, electricity distribution, R&D performance, agricultural economics, airport performance and other applications [2].

Färe and Grosskopf (2000) then introduced Network DEA model, which was improved and extended by other researchers. Their studies practically solve a DEA model for each node independently. It consists of a finite set of sub-technologies that are connected to form a network. This network model enables them to study the processes that usually remain hidden within the black box of DEA. The model is also useful for analyzing the allocation of intermediate products. This model can detect any inefficiency that the standard DEA model misses [3]. A network DEA model will be used in this research for performance measurement of the manufacturing production line because it's the only model that can be used in multi-process of the production line. Using a network DEA model is more efficient method because complex model is more capable in identifying the source of inefficiency that the other models probably missed and also obtain more accurate results to appraise the performance of the production line.

The performance measurement is a very important aspect of management planning and control in manufacturing industry especially in production line. Performance measurement has been defined by Neely et al. (2002) as "the process of quantifying the efficiency and effectiveness of past actions", while Moullin et al. (2002) defines it as "the

process of evaluating how well organizations are managed and the value they deliver for customers and other stakeholders" [4]. The performance measurement techniques or processes include collecting, analyzing and reporting information regarding the performance of any organizations. These processes are very important in performance measurement to see whether their outputs are in line with the outputs that they want to achieve.

The aimed of this paper is to propose a conceptual model for performance measurement of car manufacturing production line. The model that will be developed is the network DEA model that can measure the efficiency of the DMU in details by measuring the sub DMUs as well. The relationship between each sub DMU must be brought into account during performance measurement in order to obtain an exact result of efficiency.

II. Problem Statement

Production line in manufacturing industry usually is made up of several processes. Some of the processes might use the input produced by another process and the other process might use the output produced by another process. For example, in car manufacturing industry, the production line processes begins with pressing, followed by welding, painting, molding, assembly and inspection, consecutively. Besides that, there are also other indirect processes involved in production line such as procurement, logistics and costing. For the production line to achieve the targeted productivity, all the processes involved must perform efficiently.

These processes must go through performance measurement to determine whether they are efficient or inefficient. The most widely used methods or tool for performance measurement by the organizations is the Data Envelopment Analysis (DEA). However, the organizations cannot use the traditional DEA model to obtain more accurate results because this model does not take into account the relationship between each process in the production line. The organizations need to consider the relationship between each of the process because when some of the processes do not perform efficiently, then it will affect the efficiency of the entire processes as well.

Thus, an appropriate model is needed to measure the performance for multi process of the production line efficiently. The model proposed is the network DEA model that allows us to focus on evaluating the performance of each process and thus evaluate the performance of the entire production line. In the network DEA model, the production line is treated as a Decision Making Unit (DMU), where DMU is the entity to be evaluated to find the efficiency and the processes within the production line are treated as a sub Decision Making Units (sub DMUs). The network DEA model will be used in this research because it can detect any inefficiency that the traditional DEA model probably missed and also it can measure the DMU's efficiency with network structure.

III. Literature Review

Data envelopment analysis (DEA) is a linear programming-based methodology for measuring the comparative efficiency of each member of a set of organizational units. These units called Decision Making Units (DMUs) used various levels of specified inputs and produce various levels of specified outputs. DEA measures the efficiency of the DMU relative to an empirical production possibility frontier determined by all DMUs under appropriate assumptions regarding returns to scale and orientation [3].

Assuming that there are n DMUs for the model, each with m inputs and s outputs, the relative efficiency score of a target DMU_o, θ_o is obtained by solving the following model proposed by Charnes et al. (1993) where:

y_{ro} : amount of output r used by DMU_o
x_{io} : amount of input i used by DMU_o
i : number of inputs used by the DMU
r : number of outputs generated by the DMU
u_r : weight assigned by DEA to output r
v_i : weight assigned by DEA to input i

DMU_0 is the target DMU and this calculation will be repeated by changing the target DMU.

$$max\ \theta = \sum_{r=1}^{s} u_r y_{ro}$$

subject to

$$\sum_{i=1}^{m} v_i x_{io} = 1$$

$$\sum_{r=1}^{s} u_r y_{rj} - \sum_{i=1}^{m} v_i x_{ij} \le 0 \ , \ j = 1,2,\ldots,n$$

$$u_r \ge 0 \ , \ r = 1,2,\ldots,s \qquad (1)$$

DMU is most efficient if the efficiency $\theta^* = 1$, otherwise DMU is considered inefficient [5].

Unlike the traditional DEA, the Network DEA Model does not assure the existence of an organizationally efficient DMU. Therefore, it is

necessary to consider the network structure of DMUs as well. The Network DEA model considers the internal structure and the related activities among internal divisions of the DMUs. It accounts for divisional efficiencies as well as the overall efficiency in an interconnected framework.

There are two network systems in recent DEA literature which is series and parallel structure. The system considers with n sub-process and has series structure if the outputs of $(m = 1, \dots, n)$ sub-process consume as the inputs of the $m + 1th$ sub-process. Then, the final outputs of the system are the outputs of qth sub process. The system efficiency score for DMU_k, θ_k, is computed by the following linear programming (LP) model.

$$\theta_k = \max \sum_{r=1}^{s} u_r y_{rk}$$

$$\sum_{i=1}^{p} v_i x_{ik} = 1$$

$$s.t \sum_{d=1}^{D} w_d^1 z_{dj}^1 - \sum_{i=1}^{m} v_i x_{ij} \leq 0 \quad j = 1, \dots, q$$

$$\sum_{d=1}^{D} w_d^1 z_{dj}^1 - \sum_{i=1}^{m} w_d^{p-1} z_{dj}^{p-1} \leq 0 \quad m = 2, \dots, q-1$$

$$\sum_{r=1}^{s} u_r y_{rj} - \sum_{d=1}^{D} w_d^{n-1} z_{dj}^{n-1} \leq 0 \quad j = 1, \dots, q$$

$$u_r, v_i, w_d^p \geq 0 \quad r = 1, \dots, s, i = 1, \dots, p, d = 1, \dots, D, m = 1, \dots, n \qquad (2)$$

Model of equation (2) shows a modified version of the multiplier form of the CCR model. Here, w_d^m is considered as the associated weight of the dth intermediate product in the mth sub process. By using u_r^*, v_i^*, and w_d^{m*} as the optimal weights of outputs, inputs, and intermediate products, the efficiency score of any sub process could be computed as:

$$\theta_k^1 = \sum_{d=1}^{D} w_d^{1*} z_{dk}^1 \Big/ \sum_{i=1}^{p} v_i^* x_{ik}$$

$$\theta_k^m = \sum_{d=1}^{D} w_d^{m*} z_{dk}^m \Big/ \sum_{d=1}^{D} w_{di}^{m-1*} z_{dk}^{m-1}, \quad p = 1, \dots, q-1$$

$$\theta_k^q = \sum_{r=1}^{s} u_r^* y_{rk} \Big/ \sum_{d=1}^{D} w_d^{q-1*} z_{dk}^{q-1}$$

In this model overall efficiency score of DMU_k in a series production system is presented as the product of the efficiencies of the sub-processes, example $\theta_K^1 \times \dots \times \theta_K^p \times \dots \times \theta_K^Q$, $m = 2, \dots, n-1$, which is equal to $\theta_k = \sum_{r=1}^{s} u_r^* y_{rk} / \sum_{i=1}^{p} v_i^* x_{ik}$ in the model (2). In this approach, a unit is efficient if all its sub processes become efficient.

After that, n sub-process is considered as a typical production system with parallel structure. The output produce as a part of the final output from the input that have been divided into some part. This model was introduced by Kao (2008) to compute the efficiency score for parallel system [7].

Both series and parallel structures are useful in many applications. However, a lot of real-world production systems are more complex and do not satisfy such specific restrictions in their sub processes [6]. Production systems without explicit series and parallel structures called as the general network. Matin and Azizi (2015) noted that, the above both models cannot directly use for performance evaluation of general network systems.

IV. Research Approach

In this paper, we proposed the network DEA model that can allow us to focus on evaluating the performance of each process and thus evaluate the performance of the entire production line. In this model, the production line is treated as a Decision Making Unit (DMU), where DMU is the entity to be evaluated to find the efficiency and the processes within the production line are treated as a sub Decision Making Units (sub DMUs). By using this model we also take into account the relationship and connection between each of the processes in the production line and thus measure the performance of the entire production line.

In brief, this research begins with collecting necessary data as the inputs and outputs required for the DMU and sub DMUs in the DEA model. The performance for each sub DMU is measured by entering the external inputs into the first sub DMU and transformed them as the outputs that are then used as the inputs for another sub DMUs. There are four inputs that literally use in manufacturing production line, which are the 4M; Manpower, Money, Machine and Method. During this research, the inputs consumed and the output produced by both the DMU and the sub DMUs will be identified. However, in this research, we are going to neglect the method because we cannot convert it into any numeric value. Other than the 4M, there are also other possible inputs used in the production line that need to be considered such as time and training. Whereas, time is an index to show how long it takes

to complete a certain task where the shorter time consumed is preferred than longer time while training is an activity that can improve the workers' skill that lead to better performance of productivity compared to the workers with less skills. During the development of this model, we might also consider other possible inputs that can be useful for the DMU and the sub DMUs to relate between them.

V. Conceptual Model For Car Manufacturing Production Line

The conceptual model proposed is the Network DEA model that will be applied on performance measurement of the car manufacturing production line. In this model, there are 6 sub DMUs within the entire DMU that represent the multi processes of the production line which consist of direct and indirect processes. The numbers and types of inputs and outputs used may vary according to the sub DMUs determined. As seen in Fig. 1 below, the labels *A* is denoted as the external inputs consumed, *Z* is denoted as the outputs produced, *B* is denoted as the outputs that are going to be used as the inputs for other sub DMUs, while *C* and *D* are denoted as the relationship between the sub DMUs. As for the multi processes of the production line, Sub DMU 1 represents supply assembling units, Sub DMU 2 represents the body shop, Sub DMU 3 represents the paint shop, Sub DMU 4 represents the assemble and inspection shop, Sub DMU 5 represents rework for the bad parts and lastly Sub DMU 6 represents the bumper coating.

Sub DMU 1 which supply assembling units consume money as their inputs and produce the number of assembling units and time consumed as their output and then become the inputs to assemble and inspection shop. Sub DMU 2 which is the body shop consumes time, machine and manpower as their inputs and produces the number of car body and time consumed as their outputs. Sub DMU 3 which represents the paint shop consumes the outputs from the Sub DMU 2 including the manpower and machine as their inputs and produces the number of painted car body and time consumed as their outputs. Then, Sub DMU 4 represents the assemble and inspection shop consumes the outputs from the previous sub DMUs which consist of supply assembling the units, paint shop and bumper coating as well as machine and manpower as their inputs and produce the number of finished cars as their output. The bumper coating which is the Sub DMU 6 consume money as their inputs and produce the number of bumper coating units and time consumed as their outputs. As for Sub DMU 5, the assemble shop will reject any bad parts for rework and become an input, including the manpower and machine to the body shop.

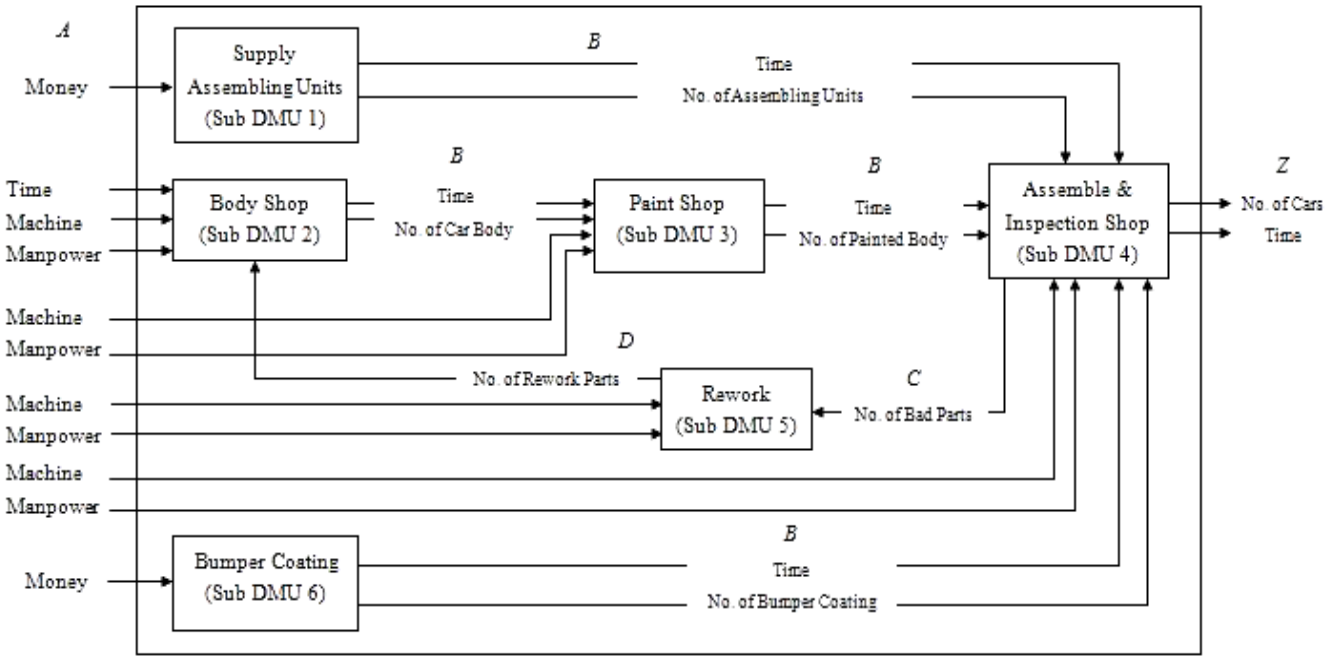

Fig 1. The DMU model.

VI. CONCLUSION

We proposed the Network DEA model to look inside the DMU, allowing greater insight as for measuring the efficiency of the production line. In this research, the model proposed is a combination of both series and parallel structures. This model applies to the DMUs that consist of several sub DMUs, some of which consume the outputs produced by other sub DMUs and some of which produce the inputs consumed by another sub DMUs. The relationship between the sub DMUs will also be considered during the performance measurement of the production line. Our Network DEA model allows for either an input orientation or an output orientation, and it's the only model that can used to measure the network structures of the DMU. The model proposed is based on a case study of car manufacturing production line and might differ from other production line especially the relationship between the sub DMUs.

To complete the research, this model will be applied as a benchmark for other production line from different car manufacturing industry. Then the results will be computed as to acknowledge which production line is more efficient and assist the company to appraise the production line's performance.

Acknowledgment

The research for this paper was financially supported by the Ministry of Higher Education (MOHE) of Malaysia under the Research Acculturation Collaborative Effort (RACE) research grant.

References

[1] Färe, R. and S. Grosskopf (2000). "Network DEA." Socio-Economic Planning Sciences 34(1): 35-49.

[2] Jianhuan Huang, Juanjuan Chen and Yong Zha, "A network DEA Model with Super Efficiency and Undesirable Outputs: An Application to Bank Efficiency in China," Mathematical Problems in Engineering Volume 2014 (2014), Article ID 793192, 14 pages.

[3] Lewis, H. F. and T. R. Sexton (2004). "Network DEA: efficiency analysis of organizations with complex internal structure." Computers & Operations Research 31(9): 1365-1410.

[4] Julie, H. (2010), Data Envelopment Analysis (DEA): A method for measuring efficiency, benchmarking and continuous improvement.

[5] Charnes, A., Cooper, W.W. and Rhodes, E. (1978), Measuring the Efficiency of Decision Making units, European Journal of Operational Research, **2**, 429-444.

[6] Matin, R. K. and R. Azizi (2015). "A unified network-DEA model for performance measurement of production systems." Measurement 60: 186-193.

[7] Kao C, Hwang S N. Efficiency decomposition in two-stage data envelopment analysis: an application to non-life insurance companies in Taiwan. European Journal of Operational Research 2008; 185: 418–29.