SCRAP REDUCTION STUDY FOR AUTOMOTIVE STAMPING

MOHD HILMAN BIN SOBHI

UNIVERSITI MALAYSIA PAHANG

UNIVERSITI MALAYSIA PAHANG

BORANG PENGESAHAN STATUS TESIS ◆

JUDUL: SCRAP REDUCTION STUDY FOR AUTOMOTIVE STAMPING

SESI PENGAJIAN: 2007/2008

Saya, **MOHD HILMAN BIN SOBHI (860709-38-5885)**
(HURUF BESAR)

mengaku membenarkan tesis (Sarjana Muda / ~~Sarjana / Doktor Falsafah~~)* ini disimpan di perpustakaan dengan syarat-syarat kegunaan seperti berikut:

1. Tesis ini adalah hakmilik Universiti Malaysia Pahang (UMP).
2. Perpustakaan dibenarkan membuat salinan untuk tujuan pengajian sahaja.
3. Perpustakaan dibenarkan membuat salinan tesis ini sebagai bahan pertukaran antara institusi pengajian tinggi.
4. **Sila tandakan (√)

[ ]	**SULIT**	(Mengandungi maklumat yang berdarjah keselamatan atau kepentingan Malaysia seperti yang termaktub di dalam AKTA RAHSIA RASMI 1972)
[ ]	**TERHAD**	(Mengandungi maklumat TERHAD yang telah ditentukan oleh organisasi / badan di mana penyelidikan dijalankan)
[√]	**TIDAK TERHAD**	

Disahkan oleh:

(TANDATANGAN PENULIS) (TANDATANGAN PENYELIA)

Alamat Tetap:
Block AA 364 ,
Fasa 3a .
32040 Seri Manjung
Perak
Tarikh: **10 NOVEMBER 2008**

DR KUMARAN A/L KADIRGAMA
(Nama Penyelia)

Tarikh: **10 NOVEMBER 2008**

CATATAN: * Potong yang tidak berkenaan.
** Jika tesis ini SULIT atau TERHAD, sila lampirkan surat daripada pihak berkuasa/organisasi berkenaan dengan menyatakan sekali tempoh tesis ini perlu dikelaskan sebagai SULIT atau TERHAD.
◆ Tesis dimaksudkan sebagai tesis bagi Ijazah Doktor Falsafah dan Sarjana secara Penyelidikan, atau disertasi bagi pengajian secara kerja kursus dan penyelidikan, atau Laporan Projek Sarjana Muda (PSM).

SCRAP REDUCTION STUDY FOR AUTOMOTIVE STAMPING

MOHD HILMAN BIN SOBHI

A report is submitted in partial fulfillment
of the requirements for the award of the degree of
Bachelor of Mechanical Engineering with Automotive Engineering

Faculty of Mechanical Engineering
UNIVERSITI MALAYSIA PAHANG

NOVEMBER 2008

SUPERVISOR'S DECLARATION

We hereby declare that we have checked this project and in our opinion this project is satisfactory in terms of scope and quality for the award of the degree of Bachelor of Mechanical Engineering with Automotive

Signature
Name of Supervisor: DR KUMARAN A/L KADIRGAMA
Position: LECTURER
Date:

Signature
Name of Panel: MOHD RASHIDI BIN MAAROF
Position: LECTURER
Date: 7 NOVEMBER 2008

STUDENT'S DECLARATION

I hereby declare that the work in this thesis is my own except for quotations and summaries which have been duly acknowledged. The thesis has not been accepted for any degree and is not concurently submitted for award of other degree.

Signature
Name: MOHD HILMAN B SOBHI
ID Number: MH05037
Date:

I would like to dedicated this thesis to all those who believe in the richness of learning. Especially to

SOBHI B ABD HAJAR

SAFURA BT AHMAD

HILWANA BT SOBHI

AHMAD HUMAIZI BT SOBHI

MUHAMAD HAMRI B SOBHI

MUHAMAD HAZIM B SOBHI and

HAZWANI BT YAACOB

who have been great sources of motivation and inspiration

ACKNOWLEDGEMENTS

I feel grateful to Allah S.W.T because this project has successfully completed. Firstly, I wish to express my sincere appreciation to my project supervisor, Ir Haji Nik Mohd Zuki b Nik Mohamad and my co-supervisor Dr Kumaran a/l Kadirgama for giving me the opportunity to work in a very interesting area, and for his support and guidance throughout my graduate studies at University Malaysia Pahang. I cannot find the appropriate words that could properly describe my appreciation for their devotion, support and faith in my ability to attain my goals.

Besides that, I also would like to dedicate my appropriation and special thank to En Dzulkifly b Mustafar for giving the permission to do my case study at Ingress Technology Sdn Bhd. I also sincerely thanks for the time spent proofreading and correcting my many mistakes

I am deeply thankful to En Daharis as a supervisor of Die Engineering at Ingress Technology in able to sharing his knowledge and experience for understanding more about stamping process.

Not forgetting my family members in giving me lots of supports in the aspects of moral, social and financial during my degree. This project definitely not exists without full encouragement from them.

Special thanks should be given to my committee members. I would like to acknowledge their comments and suggestions, which was crucial for the successful completion of this study.

ABSTRACT

This thesis investigate and analysis the reduction of scrap in automotive manufacturing parts. In this project it concern about the car door production and process. There are two types processes in making car door, first is stamp door which using the stamping process as a main process and second is sash door which using roll forming and stamping process in operating. In order to obtain the data and information about both process the experiment have been done and analyze the data. The data including time assembly, quantity part, die and scrap produced .Beside that both processes have been analyzed from manufacturing aspect including material cost, material and machine. This result presenting in SWOT analysis and QCD analysis to make comparison and choosing the best process .After the analysis, stamp door process is prefer based on faster in assembly and die quantity compare to sash door which more quantity dies needed and slow in assembly process. Otherwise, sash door have advantage in reducing scrap and small quantity in parts needed. For overall it can be conclude that stamp door is the best process for giving maximizes profit to the company by reducing the cost and achieve the objective of this project.

ABSTRAK

Tesis ini mengkaji dan menganalisis pengurangan lebihan dalam pembuatan barangan automotif. Dalam projek ini menekankan mengenai penghasilan dan pemprosesan pintu kereta. Ada dua jenis proses dalam membuat pintu kereta , pertama ialah stamp door ia menggunakan proses hentakan sebagai proses utama dan kedua ialah sash door menggunakan pembentukan pusingan dan proses hentakan dalam operasi . Untuk mendapatkan data dan maklumat mengenai kedua-dua proses satu eksperimen dijalankan dan analisa data. Data termasuk masa percantuman , kuantiti bahagian , die dan lebihan terhasil. Selain itu , kedua- dua proses telah di analisa dari segi pembuatan termasuk kos bahan, bahan dan mesin .Keputusan ini di persembahkan dalam analisa SWOT dan QCD untuk membuat perbandingan dan memilih proses yang terbaik. Selepas analisis , stamp door proses di cadangkan berdasarkan kecepatan dalam percantuman dan kuantiti die berbanding sash door banyak kuantiti die dan lambat dalam proses percantuman. Walaubagaimanapun sash door ada kelebihan dalam pengurangan lebihan dan sedikit bahagian diperlukan . Secara keseluruhan ia dapat di simpulkan stamp door proses ialah proses terbaik untuk memberi keuntungan kepada syarikat dengan pengurangan kos dan mencapai objektif projek ini.

TABLE OF CONTENTS

CHAPTER 2 LITERATURE REVIEW

CHAPTER 3 METHODOLOGY

CHAPTER 4 RESULTS AND DISCUSSION

LIST OF TABLES

LIST OF FIGURES

LIST OF SYMBOL

%	Percentage
$\sum$	Summation
C_i	value of item
X_i	number of item
m	number item

LIST OF ABBREVIATION

MVT	Multivariable Testing
USA	United state of America
UTDSC	Unconstrained two dimensional strip cutting
L	Length
W	Width
RM	Ringgit Malaysia
AHP	Analytic hierarchy process
TWB	Tailor welded blanks
PAW	Plasma arc welding
HAZ	Heat affected zone
STOW	Strength, threaten, opportunity, weakness
QCD	Quality, cost and delivery
4M	Man, machine, method and material
TIG	Tungsten inert gas
OTR	Outer
INR	Inner
GTAW	Gas tungsten arc welding
Assy	Assembly

LIST OF APPENDICES

CHAPTER 1

INTRODUCTION

1.1 PROJECT BACKGROUND

The automotive industry is the industry involved in the design, development, manufacture, marketing, and sale of motor vehicles. In 2006, more than 69 million motor vehicles, including cars and commercial vehicles were produced worldwide. In 2006, 16 million new automobiles were sold in the USA, 15 million in Western Europe, 7 million in China and 2 million in India. In 2007, the markets in Canada, USA, Western Europe and Japan are stagnating, while those in South America (especially Brazil), Eastern Europe (especially Russia), and Asia (South Korea and India) are growing. This sector contributed in the world economy as this increasing capacity, its stable growth is anticipated in the world economy. The economic value of the work capacity in the automotive sector is estimated as 1.6 billion Euros and this figure shows that the automotive sector is the 6th economic sector worldwide. The growth surely increased the production of car. Thus, the understanding of the production and manufacturing car pays importance in automotive industry.

The increasing of demand in automotive sector make all company is competed to increase their product to fulfill the requirement. Beside that's the company should have the best solution in order to reduce cost, eliminate waste, and improve performance and relationships.

Many aspects should be considered in order to reduce the cost. The cost can be reducing during manufacture, marketing and development but here it will focus during production of car. In making car there are many step should be operating.

The first step in car production is stamping process which is the process after designing the shape of part.

Metal stamping is a process employed in manufacturing metal parts with a specific design. A metal alloy sheet is used as the stock. This stock is either stamped on a press using dies and punches or drawn into shapes on hydraulic deep drawing machines. Common examples are sheet metal machines, automobile parts, metal components used in audio and video devices, aerosol spray cans, and even military tanks. A household example is the use of sheets of metal to make pots and pans.

Sheet metal can be molded into different pre-determined shapes. The metal must be malleable and needs to flow easily in order to be drawn into shapes. Stamping can be done on metals like Aluminum, Zinc, Steel, Nickel, Bronze, Copper and other alloys. This is a mass production, economical process with low cycle time. The process is also called chip less manufacturing. During stamping process we can reduce the cost by reduce the scrap or in other word material utilization. If one of company can take the best solution to eliminate the waste and reduce the scrap it can give more profit.

During the design process for stamping dies, decisions must be made about the orientation of the stamped part on the strip. The orientation determines how efficiently raw material is utilized, and in an operation such as stamping where large amounts of material are processed, small inefficiencies per piece can accumulate into huge wastes of material in the long term.

Maximizing material utilization in stamping is of paramount importance. Raw materials typically represent 75% or more of total costs in stamping facilities, so a poorly designed die can significantly increase a company's operating costs over its life. For example, in a blanking press running at 200 strokes per minute, a die will save one ton of material in each eight-hour shift if its design is adjusted to save just 10 grams per part. Once tooling is built, the amount of material waste per part is fixed for the (usually long) life of the tools.

1.2 PROBLEM STATEMENT

The major portion of the cost of stamping is material. Therefore, material economy is of the almost importance from the standpoint of cost. Fifty to seventy percent of the cost of a stamping goes for material .The ways to reduce the scrap are the most important things to be considering .This is because the reduction of scrap during stamping can reduce the wastage of material, costing and maximize the material utilization. Thus, the main tasks in this study are how to reduce the scrap during automotive part production including reduce the material cost, process and time.

1.3 PROJECT OBJECTIVE AND AIM

This project aims to find the suitable process in automotive part production in order to maximize the profit with reducing the scrap and cost. To achieve this aims there are several objective to be followed:

i. Investigate the reduction of scrap in automotive part production.
ii. Comparison the processes in automotive part production.
iii. Choose the best process which has more advantages.

1.4 SCOPE

i. Analysis the scrap reduction in car door production part.
ii. Analysis the scrap reduction in stamp door and sash door process
iii. Investigate the scrap at Proton Waja and Proton Persona door production.
iv. Analysis the processes based on time assembly, part and die quantity and percentage of scrap for three main parts.
v. Analysis only material cost for each process based on three main parts in car door.
vi. Analysis the processes based on material for three main parts and type of machine used and exterior quality of door.

CHAPTER 2

LITERATURE REVIEW

The automotive industry is the industry involved in the design, development, manufacture, marketing, and sale of motor vehicles. (Wikipedia, 2008) .One of the process in production is stamping. Metal stamping processes use dies and punches to cut the metal into the required shape (zycon, 2008). During stamping process we can reduce the cost by reducing the scrap or maximize the material utilization. Many techniques can be using in order to reduce the scrap during stamping.

Using Multivariable Testing (MVT) to analyze processes at the operations level is a common way to measure and identify scrap problems, but material waste also can be prevented by implementing changes at the engineering stage. In the auto industry the first line of attack against scrap often is taken at the engineering stage.

For instance, stamping plants sometimes use steel blanks that are larger than needed to ensure there's enough workable material during the tryout process. Over time, auto manufacturers have found ways to fine-tune the engineering process so they can use the smallest-size blank possible. One way Tier One auto parts suppliers have trimmed blank sizes is by using more computer modeling applications to predict and simulate the stamping operation. This gives them a better idea of what steel grade will produce the least amount of scrap.

Auto manufacturers also have experimented with stronger steel to reduce scrap, sometimes in the assembly of inner-door panel hinges where the need for additional reinforcement parts results in more waste. Now automakers can use laser-welded blanks, or blanks made from higher-strength steel to eliminate the need for

hinge supports. Higher-grade steel may also be used in the stamping process to prevent splitting and lower defect rates. (Ron Krupitzer, 2006)

Lay out the given shape of a blank on the given defect map of a sheet, such that the total material wastage is minimized. This is viewed as a one-dimensional nesting problem to minimize total wastage wherein a single row of blank shapes is laid out on a strip of corresponding width, in the presence of defects in the sheet. The blank used has the shape of an irregular pentagon (Fig 2.2). The regions of high strain are marked on the blank by circles. The defect map of the sheet is as shown in Fig. 2.1. In this example the calculation of material utilization is absolute, meaning that it is based on fixed values of sheet width and sheet length. The percentage of rejection is calculated by

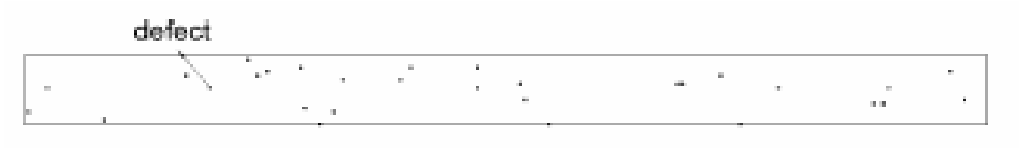

Figure 2.1 Defect map of the sheet example

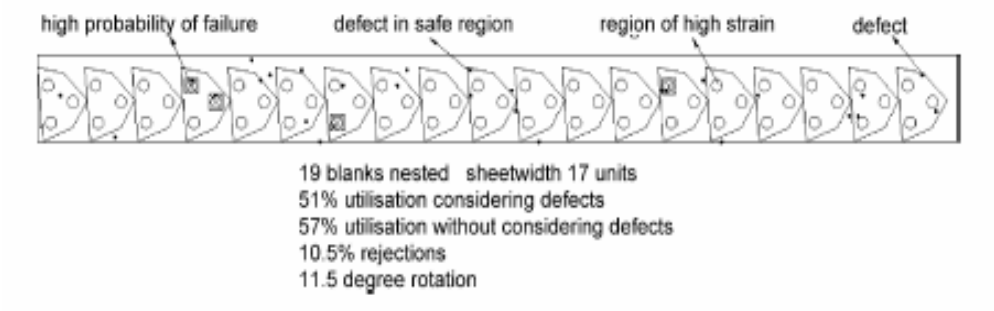

Figure 2.2 Optimized for material utilization ignoring the defects on the sheet

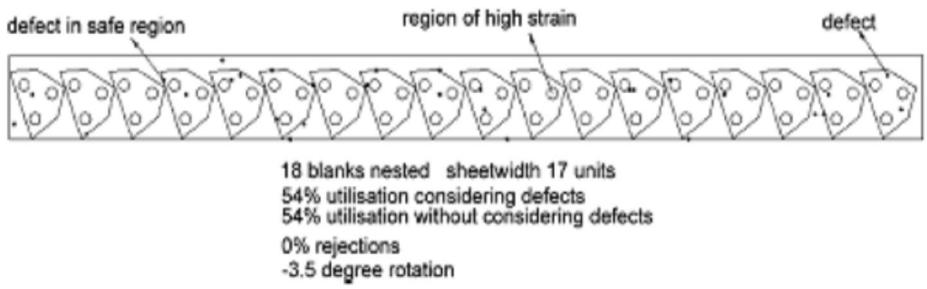

Figure 2.3 Optimized for material utilization considering the defects on the sheet

considering the probability of failure of all blanks nested on the sheet. Fig. 2.2 is the layout where utilization is maximized conventionally, i.e. without considering the rejections. But as it may be noted, some of the blanks nested are likely to fail during processing. Due to this, the material utilization reduces, and the layout proposed is no longer optimal for total material utilization for this particular sheet. On the contrary, the layout in Fig. 2.3, although nesting fewer blanks, proves to be better as far as total material utilization is concerned. Here, none of the defects are close enough to the highly strained regions that might cause failures. The foregoing describes a new concept for optimal layout of blanks on a metallic sheet to maximize the total material utilization. This will enable industries to significantly cut manufacturing costs using the layout which leads to a fewer number of rejections. As demonstrated in the examples, the layout which optimizes material utilization without considering the defects on the sheet may actually lead to a larger number of rejections and hence greater total wastage. A balanced layout optimized both for minimum rejections and maximum utilization, may lead to significant raw material, and hence cost saving. (Kamalapurkar and Date, 2006)

2.1 THE STAMP HYDROFORMING PROCESS

The stamp hydroforming is a process for shaping aluminum alloy sheets. In stamp hydroforming, one or both surfaces of the sheet metal are supported with a pressurized viscous fluid to assist with the stamping of the part thereby eliminating the need for female die. The pressurized fluid serves several purposes: supports the sheet metal from the start to the end of the forming process, thus yielding a better

formed part, delays the onset of material failure and reduces wrinkle formation. The effects of applying a constant, varying and localized pressure to the surface of 3003-H14-aluminum sheet alloy were evaluated. Experiments demonstrated draw depths improvements up to 31% before the material failed. A failure prediction analysis by Hsu was also carried out to predict an optimal fluid pressure path for the varying 4uidpressure case. The commercial finite element analysis code Ls-Dyna3D was used to numerically simulate the stamp hydroforming process. Both isotropic and anisotropic material models were used and their predictions compared against the experimental results. The numerical simulations utilizing Barlat's anisotropic yield function accurately predicted the location of the material failure and the wrinkling characteristics of the aluminum sheet. (Zampaloni et.al, 2003)

Table 2.1: Advantages using stamp hydroforming process

Improved draw ability	Applied pressure delays fracture onset
Low wear rate of tooling	Eliminates contact between forming tools
Reduced thinning in inter final part	Pressure aids in the uniform distribution of strains
Significant economic savings	Eliminates the need for a female die and heating/curing oven
Environmentally friendly	Consolidates multiple stamping operations, eliminates some finishing operations and reduces scrap/waste

2.2 EXACT ALGORITHM FOR GENERATING TWO-SEGMENT CUTTING PATTERNS OF PUNCHED STRIPS

Many machine parts are made of metal plate. The blanks (items) of the parts may be regular or irregular in shape. The plate is often divided into items according to the shearing and punching process that consists of two stages: the shearing stage and the punching stage. At the shearing stage, a guillotine shear cuts the plate into strips with orthogonal cuts. Each strip includes only items of the same type. At the punching stage, a stamping press punches out the items from the strips. Typically, a strip is fed into a stamping press that cuts an item with each stroke, feeds the strip forward, and cuts the next item. There are two types of layouts related to the shearing and punching process: the item layout and the strip layout. The item layout indicates how the items are arranged in a strip. It was determined at the tooling design stage and cannot be changed once the tooling is built. The strip layout is also referred to as the cutting pattern of strips. It indicates how the strips are arranged in the plate. It is determined at the cutting stage, or more accurately, at the beginning of the shearing stage. The item layouts on strips are taken as fixed at this stage. Strips of different item types can appear in the same pattern. They may take two orthogonal directions. The directions and the lengths of the strips should be determined carefully, so that the waste may be minimized. Three parameters characterize the strip of an item type: the initial step, the succeeding step, and the strip width. The initial step is longer than or equal to the succeeding step. These parameters were determined at the tooling design stage, and are taken as known at the cutting stage. Fig. 2.4 shows the strips of an item type, where the initial step is 73, the succeeding step is 59, and the strip width is 116. The strip in Fig. 2.4a is an X-strip with horizontal feeding direction, and that in Fig. 2.4b is a Y-strip with vertical feeding direction. In generating cutting patterns for the shearing stage, the equivalent strips in Fig. 2.5 can be used. That is to say, a strip can be taken as containing rectangular items of at most two sizes, where the length of the first item is longer than or equal to that of the others, and all items have the same width as that of the strip. The unconstrained two-dimensional strip-cutting problem (UTDSC for short) .There are m types of items to be cut from plate L x W according to the shearing and punching process. For the *i*th item type, the initial step is a_i , the succeeding step is b_i, the strip width is w_i, and the value of an

item is c_i, i = 1,. . . ,m. There is no constraint on the number of each item appearing in a pattern. Assume that R is a cutting pattern, and x_i is the number of the *i*th item type included. The following model determines the optimal solution:

$$z = \max\left(\sum_{i=1}^{m} c_i x_i\right)$$

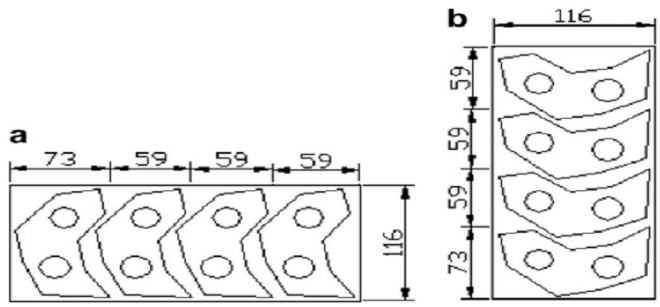

Figure 2.4 Strips of the same item type: (a) an X-strip, (b) a Y-strip.

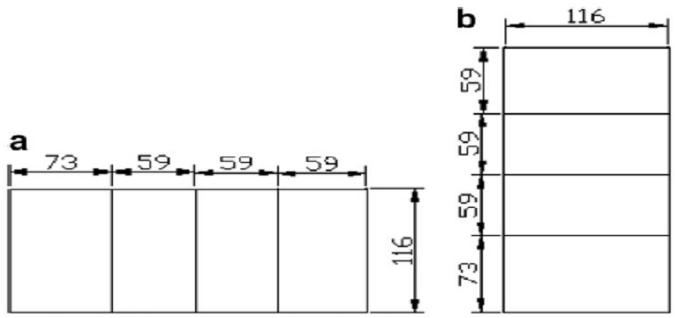

Figure 2.5 Equivalent strips: (a) an X-strip, (b) a Y-strip.

Many parts made of metal plate are processed according to the shearing and punching process. The item layout for each item type was determined independently at the tooling design stage, whereas the strips of various item types can be arranged together in a pattern at the shearing stage. The material utilization may be improved because of the arrangement of strips with different widths. The algorithm proposed in this paper can generate optimal two-segment patterns for the shearing stage. The computational results indicate that it is efficient in improving material utilization. Many types of cutting patterns exist for the cutting problems, such as the two-stage patterns, three-stage patterns, T-shape patterns, two-segment patterns, and non-

staged patterns. Patterns of different types usually have different material utilization, different computation time, and different complexities of the cutting process. It is interesting to explore the techniques for generating cutting patterns of other types for punched strips. (Yaodong Cui, 2007)

2.3 EVALUATION OF METAL STAMPING LAYOUTS USING AN ANALYTIC HIERARCHY PROCESS METHOD

Analytic hierarchy process (AHP) is a logical approach and is proved to be useful for modeling and analyzing various types of decision making situations in many fields of science and technology .AHP deals with the problem of choosing an alternative from a set of candidate alternatives which are characterized in terms of some factors. The selection of a right strip-layout for a given stamping operation amongst the available strip-layouts is clearly a decision making situation and hence in the present work the application of AHP, in selecting the right strip-layout, is considered.

AHP presents a strip-layout selection procedure pertaining to metal die stamping work in complex layout situations. The method is based on analytic hierarchy process. The proposed strip-layout index helps to evaluate and rank any given set of strip-layout alternatives. The proposed procedure is based on an AHP method and it helps in selection of a suitable strip-layout from amongst a large number of available strip-layouts for a given metal stamping operation. The methodology is capable of taking into account important requirements of metal stampings and it strengthens the existing procedure by proposing a logical and rational method of strip-layout evaluation and selection. Hence, the choice of an efficient strip-layout is an important step during die design, because as only the optimum layout can reduce wastage of the strip material and reduce the overall cost of production. (R. Venkata Rao, 2004)

2.4 TAILOR WELDED BLANKS STAMPING

The laser tailor welded blank is to make use of the laser processing technology, joining sheet metal of different thickness, strength and surfaces status in a one piece before stamping process. The laser tailor welded blank has gotten the extensive application in the automobile industry. According to the introduction the body and chassis of automobile is made up of more than 300 parts, the TWB can reduce 66% of the number of parts, therefore, it reduces the stamping mould of parts, increases the utilization of material. Adopting the TWB stamping technology, the whole quantity of product gets the exaltation; it plays an important role of cutting the automobile weight, reducing process, cutting cost, raising the efficiency of producing and reducing the consumption of material. Therefore, researching the TWB has very important meaning.

1. Using the method that precisely establishes the finite element model of weld seam, the real material parameter of weld seam, can gets more approximate with fact calculation result. Adopting segmental blank holders can preferably control the wrinkling and moving of weld seam on unequal thickness TWB.
2. The weld seam's pressure direction (major strain direction) is relation to deformation directly, when the weld seam parallels with pressure direction, the forming property of TWB is worst.
3. The weld seam movement of unequal thickness TWB depends on base material property and thickness ratio, generally speaking, weld seam moves to the thicker blank obviously. Therefore, choosing the welding material reasonably, keeping part's deformation of TWB even and minimizing weld seam moving, this would be the emphasis of TWB in applied technology from now on. (X.G. Qiu, W.L Chen, 2007)

One immediate application for the SDLAC system is the forming tailor welded blanks (TWBs). The term, TWB, is derived from the notion that the automobile designer is able to 'tailor' the location in the stamping where specific material properties are desired. These differences can be in the material's grade, gauge thickness, strength, or coating, for example galvanized versus un galvanized .Forming TWBs changes the traditional forming-welding sequence to a welding forming sequence. TWBs add flexibility into the design process and have generated

enormous interest in the automotive industry as of late due to the substantial benefits they produce. These include reduced manufacturing costs due to fewer forming dies, elimination of downstream spot welding operations, and reduced scrap; weight reductions due to the combining of parts into a single component; improved dimensional part consistency from the reduction of inaccurate spot welding processes; improved corrosion resistance through the elimination of lap joints by integration of reinforcements and improved crash test results due to the increased stiffness of laser and mash-seam welds in comparison to traditionally used spot welds.(Jian Ca et.al, 2001)

The present invention relates generally to forming and stamping of metal sheets and, in particular, to a tailor welded blank for use in a fluid forming process. Tailor welded blanks are well known. A tailor welded blank consists of at least two sheet elements that are welded together at respective edges thereof, forming a weld region. Tailor welded blanks are typically utilized to form the welded sheet elements into various stamped metal components, including automotive door panels and the like. Tailor welded blanks have been used extensively in conventional stamping processes where the blank is placed in a die and a press punch is placed in contact with the blank to deform the blank to the shape of the die. Tailor welded blanks are advantageous because they eliminate the use of reinforcement members in the sheet assemblies, reducing manufacturing costs and scrap. (Schroth and Krajewski, 2004)

Pressure to meet customer demands for low cost, high performance, and safe vehicles. Tailor Welded Blanks (TWBs) offer a means to address all of these concerns by reducing manufacturing costs, decreasing vehicle weight, improving crashworthiness, improving dimensional accuracy of the final part, and increasing corrosion resistance .A TWB is fabricated by welding together two or more sheets of metal of different thicknesses, material grades, and or coatings to produce a single blank, which is subsequently formed. TWBs began appearing in Europe and Japan in the mid 1980s, and their use has continued to increase. Aluminum TWBs offer additional weight savings and would address the concerns of increased cost and decreased crashworthiness, which normally accompany Aluminum for steel material substitutions. While Aluminum TWBs are currently being implemented for less structural components such as deck lids and hoods, door inners and floor pans are

being investigated as possible Aluminum TWB applications for the future. (Brad Kinsey et.al, 2001)

In conventional applications, large auto body panels are usually made up of several smaller components. Each component is formed individually and later welded together to form the desired body panel .This approach increases the tooling and the material costs, and contributes to the dimensional inaccuracy in the assembly process. Therefore, many companies are trying to form the body panels in a single stamping operation whilst keeping the scrap and material costs down by using tailor-welded blanks. A combination of different materials, thicknesses, and coatings can be welded together to form a blank for stamping a large auto body panel .The main advantage of using tailor-welded blanks is to reduce the amount of scrap due to the odd shapes of the blanks. Smaller pieces of metals which form an odd shape blank can be nested easily for better material utilization Another main advantage of using a tailor-welded blank is to have specific characteristics at particular parts of the blank in order to reduce the material weight and cost. Particular portions of the blank can be made from a higher gage or high-strength material to increase stiffness whilst having a thinner gage material at other portions, or alternatively portions of the blank can be made up of coated steel to increase the resistance to corrosion whilst having bare steel at other sections. (Mustafa A. Ahmetoglu, et.al, 1995)

The continuously increasing requirements of the customer to high performance and low cost, the ever constricting government environmental regulations regarding safety and exhaust emissions, and the increasing pressure to improve the ability of technological innovation and of the violent competitive market, force automakers to use many new materials, including tailor-welded blanks, advanced high-strength steel and sandwich sheet, to decrease the weight of car bodies and improve their driving performance. Among the above materials, tailor-welded blanks offer a unique opportunity to meet all of these goals simultaneously. Different from the conventional manufacturing process, the use of tailored blanks is a relatively new method of producing automotive structural components. In this process, a combination of different material grade, thickness, strength and coating can be welded together to form a blank prior to stamping, so the formed sheet metal

can be optimized for weight and function, while reducing waste material, assembly time and even design effort. Tailor-welded blanks have generated enormous interest in the automotive industry due to the following advantages: improvement of assembly tolerances and crash durability, reduction of the amount of scrap and the number of parts to be assembled, lower personnel and production cost and extension of the styling potential for product designers .However, the critical properties of tailor-welded blanks introduce many challenges into the manufacturing process, compared to those for homogeneous materials. The basic factor influencing the formability of tailor-welded blanks is the hardening of the weld joint and the heat-affected zone during the welding process .Therefore, some new methods to improve the formability of a tailor-welded blank have been adopted in the design and manufacturing process, such as multi-stage stamping and optimized blank-holding force. The purpose of this study was to predict correctly the metal flow and manufacturing defects, including cracking and wrinkling of tailor-welded blanks in the multi-stage stamping process. To achieve this goal, experiments were carried out and the thickness distributions were compared to the results of simulation. (H.M. Jiang et.al, 2004)

2.5 THE APPLICATION OF ROLL FORMING FOR AUTOMOTIVE STRUCTURAL PARTS

Roll forming is a flexible process due to its ability to be applied to a variety of part lengths and sheet materials as well as in combination with other processes such as stamping. It is also possible to produce a number of profile derivations on one flexible roll forming machine. Furthermore, the investment for roll forming is low when compared to stamping and hydroforming. The continuous manufacturing operation is investigated and rated as per its applicability, costs and technical limitations with the goal of reducing manufacturing costs and providing greater process flexibility. In order to support the application of roll forming, i.e. as a substitute for stamping, a rapid calculation tool for roll formed body structure parts was developed. By means of this tool, a body structure designer will be able to obtain quick calculation figures for a designed part to decide if the part can be manufactured by the roll forming process cost efficiently.

Discontinuous manufacturing technologies, such as stamping and hydroforming, produce parts one at a time (i.e. piece-parts). One important characteristic of discontinuous manufacturing processes is that the production of scalable parts (e.g. in length) is not economically reasonable. Stamping is the most common technology for forming sheet metal blanks in automotive applications. Common parts are body structure parts (side members, pillars) as well as outer panels (doors, roofs, etc.). Currently, most of the body-in-white parts are manufactured via stamping processes (ca. 250–300 parts per car body). Generally, the stamping technology includes various cutting and forming processes depending on the part geometry. (Sweeney and Grunewald, 2003)

Roll forming is a progressive process that passes a metal strip through a series of specially shaped roller dies to form, ultimately, a desired roll formed profile. Strip stock is fed through successive pairs of contoured rolls that progressively form the workpiece to meet the desired specifications. (Advantagefabricatedmetals, 2008)

The roll forming process characteristics include:

- Its common usage to mass produce mass long metal pieces with relatively close tolerances,
- The utilization of ductile workpiece materials, softer metals,
- Working with materials that are usually less than 1/8” thick and 20” wide,
- The capability to produce desired workpieces at a forming speed of 100 feet per minute (fpm),
- Its strong suitability to produce decorative and structural metal products often for roofing and siding

2.6 PLASMA ARC WELDING TECHNOLOGY

Plasma arc welding (PAW) is very similar to conventional gas tungsten arc welding in the sense that the plasma jet is used as a source of intense heat to melt the material to be welded. When the tungsten electrode locates within the torch nozzle and the orifice, the arc is restricted and the highly constrained plasma jet can displace the molten metal in the weld pool to form a keyhole completely through the base metal (Correa, 2008)

The welding technique used in this research is plasma arc welding (PAW), in which the electric arc generated between a non-consumable tungsten electrode and the working piece is constrained using a copper nozzle with a small opening at the tip. By forcing the plasma gas and arc through a constricted orifice, the torch delivers a high concentration of energy to a small area, giving higher welding speeds and producing welds with high penetration/width ratios, thus limiting the HAZ dimensions. For these reasons PAW is a very useful technique for welding austenitic steels and can also be applied to duplex stainless steels. (A. Ure˜na et.al, 2007)

2.7 MATERIAL

Materials	Metal stamping	Roll forming	Embossing	Press braking	Punching	Notching	Blanking	Shearing	Cut to length
Aluminum (All Alloys)	X	X	X	X	X	X	X	X	X
Aluminum (T1/T2)	X	X	X	X	X	X	X	X	X
Brass	X		X	X	X	X	X	X	X
Cold Rolled Steel	X	X	X	X	X	X	X	X	X
Copper	X		X	X	X	X	X	X	X
COR-TEN™ Steel		X							
Galvannealed		X							
Galvanized Steel	X		X	X	X	X	X	X	X
High Strength, Low Alloy Steel	X		X	X	X	X	X	X	X
Hot-dipped galvanized G-90 through G-285		X							
Hot Rolled Steel	X	X	X	X	X	X	X	X	X
Pre-Painted Metals		X							
Stainless Steel	X	X							
Steel (All Alloys)		X	X	X	X	X	X	X	X
Titanium	X				X	X	X		X
Zinc	X		X	X	X	X	X	X	X

Source: (advantagefabricatedmetals.com, 2008)

CHAPTER 3

METHODOLOGY

3.1 DESCRIPTION OF METHODOLOGY

The methodology applied in this study is briefly shown in Figure 3-1. Literature study was done in the early stage of study to have a better understanding on the project. The stamp door process was operating and run the simulation to obtain the result for make observation. The different process is sash door was operating also and run simulation to obtain the result. The both result then will be validated and decision will make based on the observation of results to justify whether the newly process in car door production can be utilized in any further to achieve the objective study to provide best solution for scrap reduction in automotive stamping especially on car door .

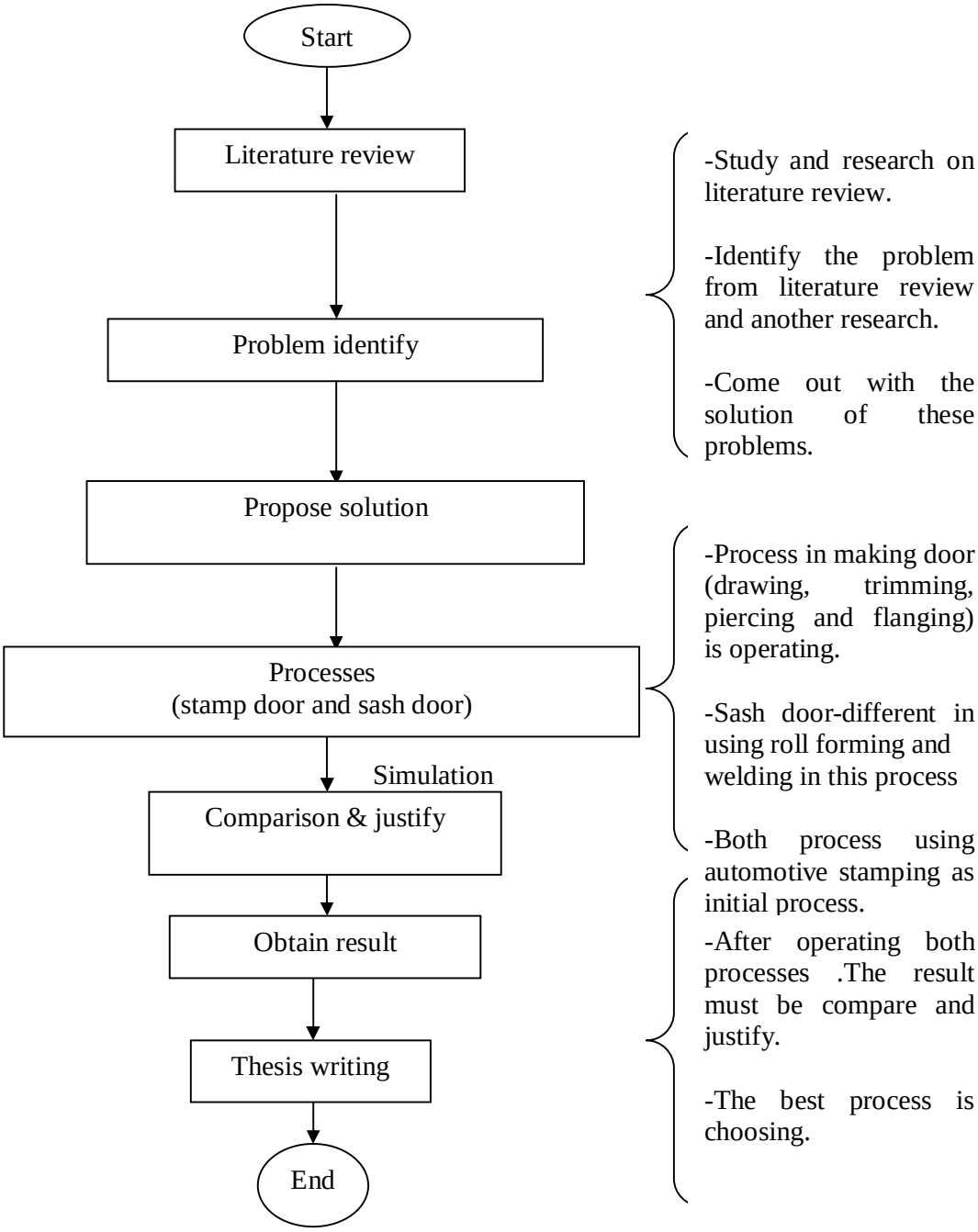

Figure 3.1 Project methodology flow chart

1. Literature review

    - Literature review was studied about the scrap reduction in automotive stamping. Find the best technique or solution in order to fully utilize the material without wasting.
    - In literature review its collect the journal and analysis by doing the previous researcher and justify the result by comparing with other solution

2. Problem identify

    - From literature review and previous researcher we can find that there are many problems occur during stamping.
    - The problem is how to utilize the material in order to minimize the wastage of material in stamping process at car door.
    - Beside that how to reduce cost, time and process also be considering as a problem.

3. Propose solution

    - Based on the research and analysis, proposing the solution is needed in order to finding the best way to solve the problem.
    - The solution must be proposing at least two or three in order to compare and justify the best and suitable process.
    - The process is chosen must have more advantages including reducing scrap, cost, time and more efficient.
    - Here two processes are proposed .There are sash door and stamp door.

4. Processes

Stamp door

- Stamp door mean operate the stamping process in producing the car door. Analyzing the aspect is considered in this process like scrap reduction, cost, step, advantages and disadvantages.
- The die using in stamp door process are different from the die are using in sheet metal forming. In stamp door it uses the automotive stamping die which is larger and expensive compare to the sheet metal forming die.
- There are 4 process in making door (drawing , trimming , piercing and flanging)

Sash door

- Sash is quite different from stamp door because in sash door it operates in two processes. First process is automotive stamping like the stamp door. Second process is roll forming to form the window frame.
- Analyze all aspect in sash door and compare to the stamp door process.
- Combine the window frame with the door by using welding process.

5. Comparison and justify
   - After all process are finishes. The result must be analyzed by doing the comparison between two processes.
   - Make the STOW analysis in order to compare the process.
   - After comparison and justify, the best process with higher in reduce the scrap in stamping is choose.

6. Obtain result

   - The result from selected process is obtained and analyzes to solve the problem.
   - The result shown which process can be applied and implementing in car door production.

7. Thesis writing

   - Write the full report of project start from beginning until last.

3.2 METHOD FOR STAMP DOOR PROCESS

Drawing Dies

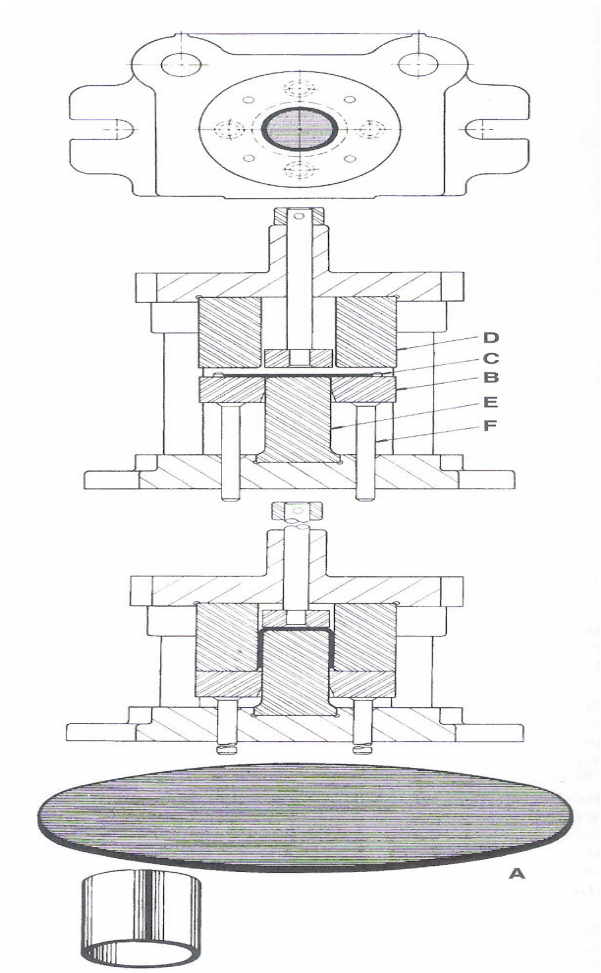

Figure 3.2 Example of drawing die

The drawing of metal, or deep-drawing manufacturing technology, is defined as the stretching of sheet metal stock, commonly referred to as a blank, around a punch. The edges of the metal blank are restrained by rings and the punch is deep drawn into a top die cavity to achieve the end shape that is desired. There are many shapes that can be made through deep drawing and stamping, such as cups, pans, cylinders, domes, and hemispheres, as well as irregularly shaped products. In Figure 3.2 at A, a flat disk is to be drawn into a cup. The blank is placed on pressure pad B of the drawing die and is located by four spring- loaded pins C. Descent of the upper die causes the blank to be gripped securely between the surface of pressure pad B and the lower surface of draw ring D. Further descent of the ram causes the blank to be drawn over punch E until it has assumed the cup shape shown in the closed view at the right. Pressure pins F extend to the pressure attachment of the press. The amount of pressure must be adjusted carefully. Excessive pressure would cause the bottom of the cup to be punched out. Insufficient pressure would allow wrinkles to form. With the proper amount of pressure, a smooth, wrinkle-free cup is produced. Drawing dies are extensively used for producing stampings ranging from tiny cups and ferrules to large shells for pressure vessels, ships, cars, aircraft, and missiles.

Trimming Dies

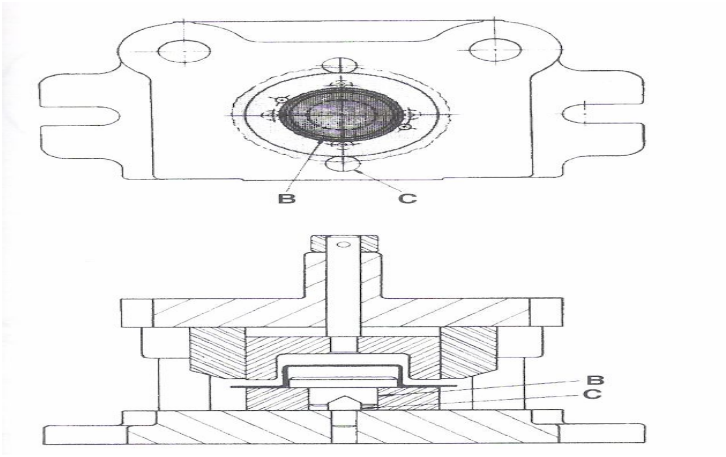

Figure 3.3 Example of trimming die

Trimming dies cut away portions of formed or drawn workpieces that have become wavy and irregular. This condition occurs because of uneven flow of metal during forming operations. Trimming removes this unwanted portion to produce square edges and accurate contours.

The illustration at A shows a flanged shell after the drawing operation. A trimming die is required to trim the irregular edge of the flange. The shell is placed over a locating plug B. Descent of the upper die then causes the scrap ring to be cut from around the flange. After trimming, the shell is carried up in the upper die and a positive knockout ejects it near the top of the stroke. The scrap rings are forced down around the lower trimming punch until they are split in two by scrap cutters C applied at the front and back of the die. The scrap pieces fall to the sides, away from the operation of the press.

Piercing Dies

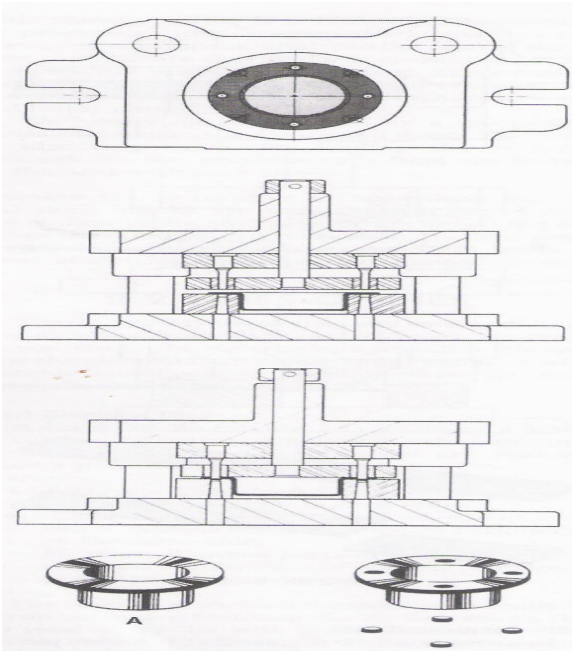

Figure 3.4 Example of piercing die

Piercing dies (Figure 3.4) pierce holes in stampings. There are two principal reasons for piercing holes in a separate operation instead of combination for piercing with other operations:

1. When a subsequent bending, forming, or drawing operation would distort the previously pierced hole or holes
2. When the edge of the pierced hole is too close to the edge of the blank for adequate strength in the die section. This occurs in compound and combination dies in which piercing and blanking are done simultaneously.

The inset at A shows a flanged shell requiring four holes to be pierced in the flange. If the holes were pierced before the drawing operation, they would become distorted because of the blank holder pressure applied to the flange in the drawing process. The shell is located in an accurately ground hole in the die block. Piercing punches

are retained in a punch plate fastened to the punch holder, and a knockout affects stripping after the holes have been pierced.

Shaving Dies

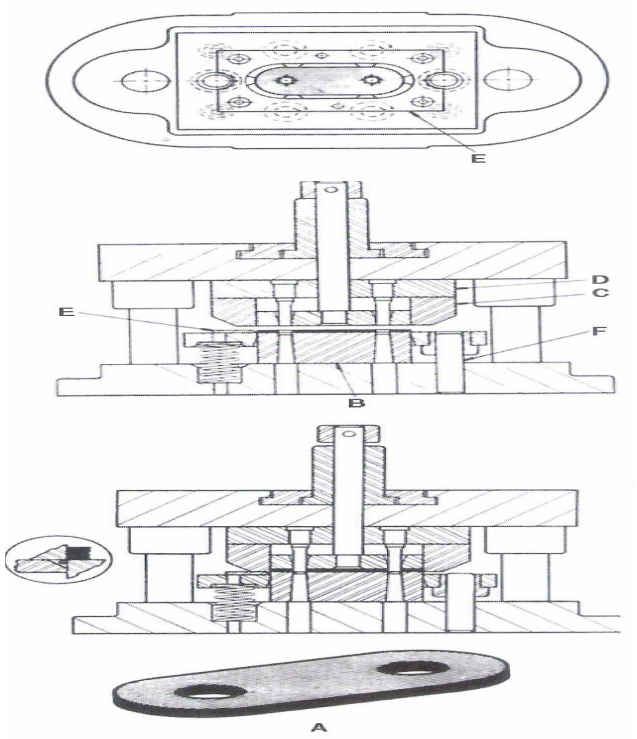

Figure 3.5 Example of shaving die

Shaving is the operation of removing a small amount of metal from around the edges of a blank or hole in order to improve the surface. A properly shaved blank has a straight, smooth edge and it is held to a very accurate size. Many instruments, business machines, and other parts are shaved to provide better functioning and longer wear.

In Figure 3.5, a blank A is to be shaved, both along outside edges and in the walls of the two holes. The shaving die for this work piece consists of an inverted shaving punch B fastened to the die holder and a shaving die block C fastened to the punch holder .A spacer D backs up the die block and its retains the shaving punches for the holes .

The blank is located in a nest E, beveled to provide clearance for the curled chip. The nest is mounted on a spring stripper plate guided on two guided pins F. The shaved blank is carried up, held in the die block with considerable pressure and ejected near the top of the stroke by a positive knockout .Shaving dies are ordinarily held in floating adapter die sets for the better alignment .This is necessary because no clearances is applied between punches and die block.

3.3 METHOD FOR SASH DOOR

The first processes in sash door same with the process in stamp door but different in adding roll forming and welding process.

Sash door

The door sash frame is a steel assembly within the car door system that supports the window. The company utilizes roll-forming technology and robotic plasma welding technology to ensure that the product is strong, durable yet lightweight with an attractive sleek finish.

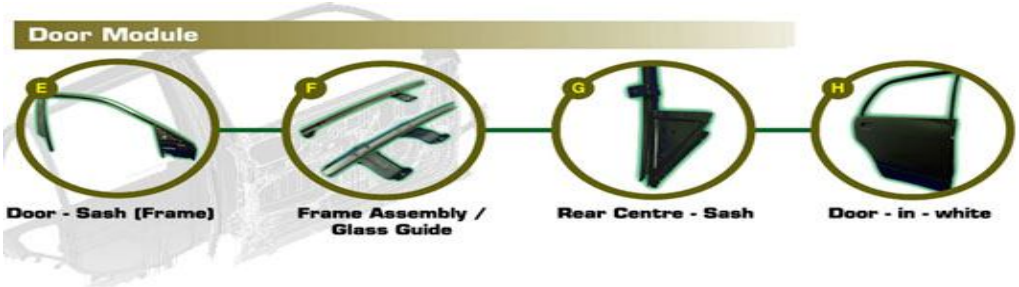

Figure 3.6 Process in sash door

E show the window frame .The window frame join with the door by using welding process.

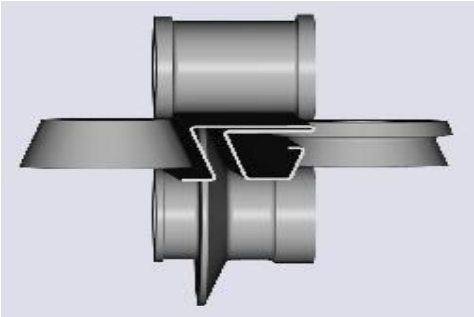

Figure 3.7 Roll forming process

The window frame provided by using roll forming process. Roll forming is a process, in which a strip of metal, usually in coil forms, is continuously passed through a series of roller dies and progressively formed to the desired shape. In many cases roll forming eliminates multiple stage production, sub-assembly and finishing operations.

To combine the window frame at the door the plasma arc welding is choosing because Plasma arc welding (PAW) is an advanced version of the tungsten inert gas (TIG) welding process. TIG welding has a free-burning arc, which is unstable and tends to wander in the low current range. With increase in current, the arc power increases and the arc diameter also increases.

This leads to a lack of concentrated power in the work-piece, which results in a bigger seam and a larger heat-affected zone. Unlike TIG-welding torches, PAW uses a constricting nozzle and employs two separate gas flows, which give rise to a concentrated plasma arc having a narrow columnar shape. It gives the best surface of door production.

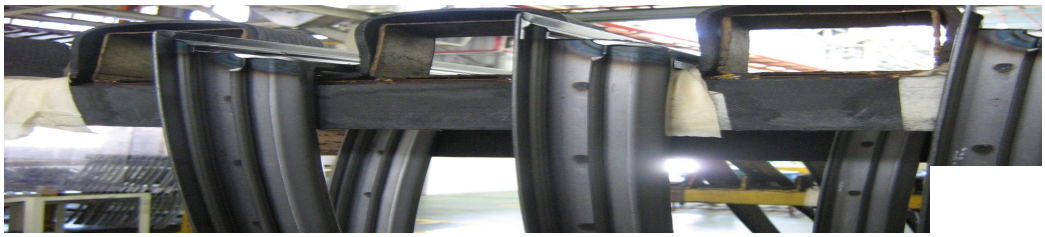

Figure 3.8 Plasma welding at frame window

CHAPTER 4

RESULTS AND DISCUSSION

The result was obtained after the experimental and simulation have already run or finished. From the result, the decision would make to justify which process more suitable in stamping in order to maximize the profit with reducing the scrap and achieve the objective of this project.

4.1 SASH DOOR

From the case study have been done at industry this table below shows the data that get from this process. The data below is for Sedan car door. Refer to table 4.1

Refer to table 4.1

4.2 PERCENTAGES OF MATERIAL SCRAP ANALYSIS

Table 4.2: Data for sash door process

Part name	Thick (mm)	Part wgt (kg).	Mat. wgt (kg)
Panel Fr Door OTR L/R	0.85	5.643	6.61
Panel Fr Door INR L/R	0.65	3.33	3.67
Panel Fr door Hinge L/R	1.2	2.202	2.794

PERCENTAGE OF SCRAP

SASH DOOR

Determine percentage of the scrap at Panel Fr Door OTR L/R

$$\frac{6.61-5.643}{6.61} \times 100 = 14.62\ \%$$

Determine percentage of the scrap at Panel Fr Door INR L/R

$$\frac{3.67-3.33}{3.67} \times 100 = 9.26\ \%$$

Determine percentage of the scrap at Panel Fr Door hinge L/R

$$\frac{2.794-2.202}{2.794} \times 100 = 21.19\ \%$$

Total percentage of scrap in sash door process

14.62+9.26+21.19 = 45.06 %

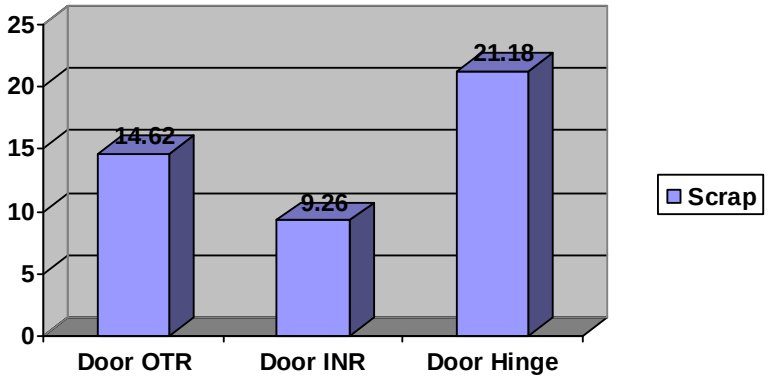

Figure 4.1 The bar chart show the percentage of material scrap produce during sash door process

Based on the bar chart above, the total percentage scrap produced is 45.06%.Its mean that only 54.94% of the materials have been used in this process to making one car door. This result obtained when calculating the part weight after subtract with raw material weight at the end of this process. This scrap only calculates at three main part of door. The percentage of the scrap have been produced in sash door lower than stamp door process, its cause by application of roll forming in sash door process.

4.3 STAMP DOOR

The data collection for stamp door process shown in Table 4.3

Refer to table 4.3

4.4 PERCENTAGES OF SCRAP ANALYSIS

Table 4.4: Data for stamp door process

Part name	Thick (mm)	Part wgt. (kg)	Mat. Wgt (kg)
Panel Fr Door OTR L/R	0.75	6.07	11.64
Panel Fr Door INR L/R	0.75	4.43	4.87
Panel Fr door Hinge L/R	1.2	2.202	2.794

STAMP DOOR

Determine percentage of the scrap at Panel Fr Door OTR L/R

$\frac{11.64-6.07}{11.64} \times 100 = 47.85\ \%$

Determine percentage of the scrap at Panel Fr Door INR L/R

$\frac{4.87-4.43}{4.87} \times 100 = 9.03\ \%$

Determine percentage of the scrap at Panel Fr Door hinge L/R

$\frac{2.794-2.202}{2.794} \times 100 = 21.19\ \%$

Total percentage of scrap in stamp door process

47.85+9.03+21.19 = 78.07 %

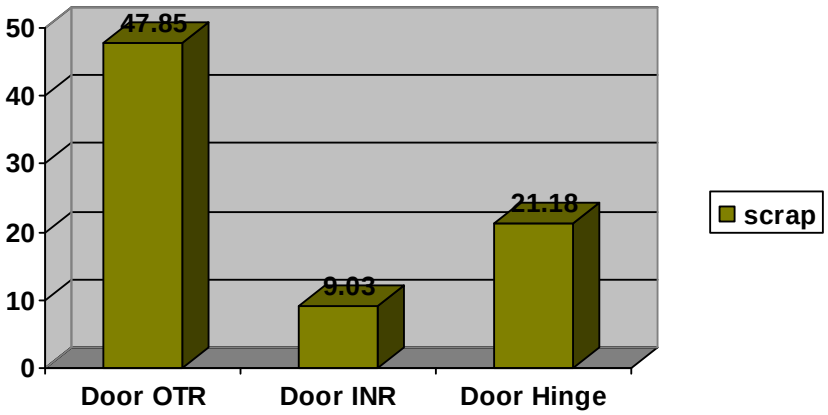

Figure 4.2 The bar chart show the percentage of the material scrap produce in stamp door process

The percentage of scrap has been produced in this process was about 78.07 % .This percentage include 3 main part in door production. This percentage means that only 21.93% of the material are using in making door. The percentage of scrap obtain when weight of the part must be subtract with weight of the raw material after finish the process.

4.5 SASH DOOR AND STAMP DOOR COMPARISON

Table 4.5: Sash door and stamp door comparison

Item	Stamp door	Sash door
Machine	X	
Material		X

The table above show that the differential between stamp door and sash door .Machine and material would be consider in order to make decision which process have more advantage.

4.5.1 Machine

4.5.1.1 Sash door production machine

Figure 4.3 Roll forming machine

The picture for Figure 4.3 shows the roll forming in sash door process. Roll forming is a continuous bending operation in which flat sheet metal (from coils or pre-cut blanks) is plastically deformed along a linear axis. In sash door process the raw material come from coils and need to be processes. So the tandem sets of rolls shape the raw material in a series of progressive stages until the desired cross-section is obtained. The gap between upper and lower rolls changes from one roll forming

station to the next, whereas the material thickness and the area covered by the cross-section remains almost constant. The utilization of flexible rolled sheet metal (for the manufacturing of parts with different wall thickness along the part length) and movable rolls (to produce parts with gradually changing cross-sections) increases the technology flexibility highly. This cause the scrap has been produced is lower. From the result obtained the principal of roll forming are similar with article that found in advantagefabricatedmetals.com (2008).

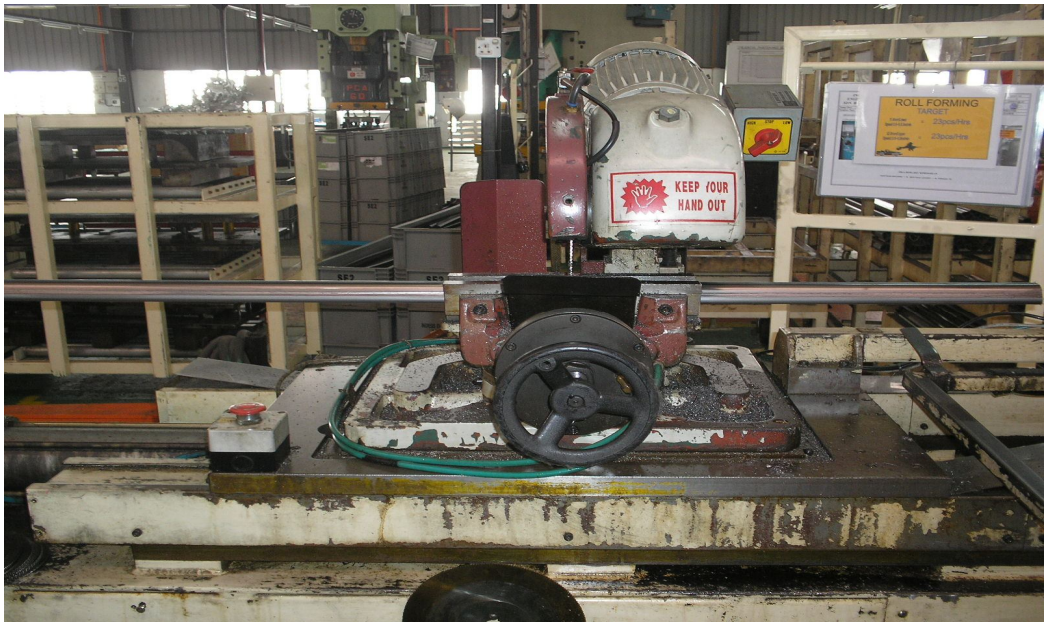

Figure 4.4 Another Roll forming machine

This machine is different from roll forming machine in Figure 4.3 because this machine using for making a shape from raw material. The number of forming steps needed to produce the profile is mainly dependent not only on its geometry but also on its material, desired surface quality, lubrication and form of input material (coil or pre-cut blanks). One disadvantage of the roll forming process is the reduced freedom in cross-section design compared to metal extrusion; e.g. ribs within a closed profile.

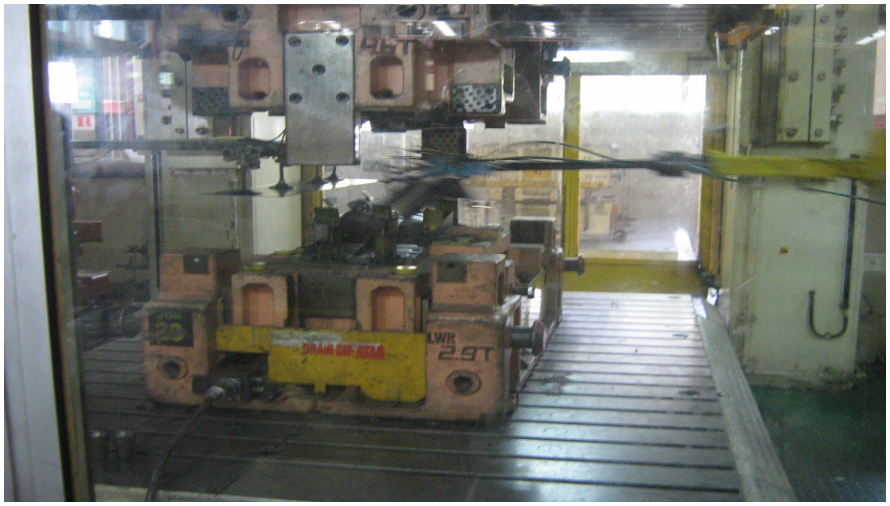

Figure 4.5 Stamping process for sash door

Stamping machine that's use in sash door process for making bottom parts of car door.

4.5.1.2 Stamp door production machine

In stamp door process only stamping machine is needed to produce the car door

Figure 4.6 Stamping machine

Machine that using by stamp door process is simple compare to the sash door. In stamp door the raw material shaped by stamping process and assembly the part but in sash door process the raw material divided 2 type of process. First is using roll forming to produce d window frame and second using stamping to produce bottom part of door. The stamp process is more faster compare to sash door. It proven by time taken to assemble of the door is less compare to the sash door. This advantage goes for stamp door because the time for complete one car door become faster due to one machine involve.

4.5.2 Material

Table 4.6: The type of material using for both process

No	**Part name**	**Sash door**	**Stamp door**
1	Panel Fr Door OTR L/R	SGACE-45	SGACE-45
2	Panel Fr Door INR L/R	SGACE-45	SGACE-45
3	Panel Fr door Hinge L/R	SGACE-45	SGACE-45

Both process using same material as a raw material. The material is SGACE-45. This is one of type cold rolling steel plate. The material same with material that prefer by author in ‘advantagefabricatedmetals.com’ website in using for stamping and roll forming process.

Table 4.7: Material weight for both processes

Name of part	Sash door (kg)	Stamp door (kg)
Panel Fr Door OTR L/R	6.61	11.64
Panel Fr Door INR L/R	3.67	4.87
Panel Fr door Hinge L/R	2.794	2.794

Cost of Raw Material

Calculation Cost for Sash Door Material

Cost material of part for three main parts in sash door

Material weight x price of steel (1kg)

= (6.61 +3.67 +2.794) kg x 2 x RM 17

= RM 444.52

Calculation Cost for Stamp Door Material

Cost material of part for three main parts in sash door

Material weight x price of steel (1kg)

= (11.64 + 4.87 +2.794) kg x 2 x RM 17

= RM 656.34

The calculation of material cost only consider at three main parts. There are Panel Fr Door OTR L/R, Panel Fr Door INR L/R and Panel Fr Door Hinge L/R. Based on calculation, cost material for one sash door is RM 444.52. It's lower than cost of material in stamp door process. So, the sash door process can minimize the cost of material.

4.6 SASH DOOR AND STAMP DOOR ANALYSIS

Table 4.8: Data for sash door process

No	Part name	Part	Die Qty	Assy. (min)
1	Panel Fr Door OTR L/R	2	4	6.12
2	Panel Fr Door INR L/R	1	8	
3	Panel Fr door Hinge L/R	2	4	
4	Reinf Fr Door B/line OTR L/R	2	3	
5	Plate back L/R	2	1	
6	Reinf Fr Door B/Line INR(A) L/R	2	2	
7	Sash assy Fr door WDO L/R	2		
8	Reinf fr door latch L/R	2	2	
9	Bar Fr door side impact L/R	2		
10	BRKT, Fr UPR L/R	2	4	
11	BRKT, Fr LPR L/R	2	4	
12	BRKT, RR L/R	2	4	
13	Reinf Fr door hinge UPR L/R	2	2	
14	Reinf Fr door hinge LWR L/R	2	2	
15	Reinf Fr door OTR	1	2	

Table 4.9: Data for Stamp door process

No	Part name	Part	Die Qty	Assy. (min)
1	Panel Fr Door OTR L/R	2	4	5.25
2	Panel Fr Door INR L/R	2	4	
3	Panel Fr door Hinge L/R	2	4	
4	Reinf Fr Door B/line OTR L/R	2	3	
5	Plate back L/R	2	1	
6	Reinf Fr Door B/Line INR L/R	2	2	
7	Channel Assy door sash Fr	1		
8	Channel Assy door sash side	1		
9	Reinf Fr door latch L/R	2	2	
10	Bar Fr door side impact L/R	2		
11	BRKT, Fr UPR L/R	2	4	
12	BRKT, FR LWR L/R	2	4	
13	BRKT, RR L/R	2	4	
14	Reinf Fr door hinge UPR L/R	2	2	
15	Reinf Fr door hinge LWR L/R	2	2	
16	Reinf Fr door OTR	1	2	

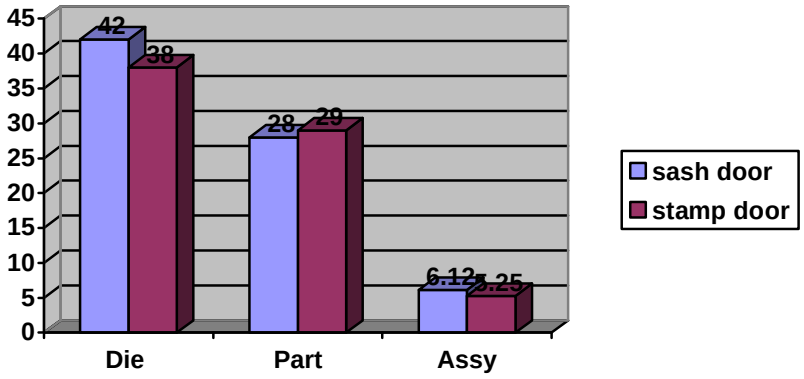

Figure 4.7 Histogram for sash door and stamp door comparison

4.6.1 Die quantity

In the sash door process the die quantity is needed in one process is 42 compare to the stamp door process only 38 die is needed. The increasing of quantity dies can cause to increasing of cost but it's depending on size and material of the die. For one unit die the cost commonly approximately RM 250 000. In stamping process die cannot be use for another type of product its mean the new product must have their specific dies. The die must be design follow the shape of the product. The lower of die needed in one process can save the cost and giving profit to company.

4.6.2 Part

In sash door only 28 parts must be combining to make 1 car door compare to the stamp door that 29 parts needed to make it one finishing car door. This happen because some of the part produce by using the roll forming process. The strategy reduce the number of part needed simplifies assembly operation and most important save the cost and giving more profit to the company.

4.6.3 Assembly time

The stamp door process taking only 5.25 minute to assemble whole part and finishing the assembly process. Its compare with sash door that 6.12 minute is needed to complete assemble the parts. The different time taken here caused by the increasing of die quantity and different process are involved in both process. In stamp door process the material has been stamp by stamping process but in sash door the roll forming process is involved. So, its take the long time if two processes is needed to complete the assembly.

Figure 4.8 Assembly area

This picture show that the assembly place to assemble whole part to make the one complete car door.

Table 4.10: Percentages of material scrap for both processes

Part name	Sash door (%)	Stamp door (%)
Panel Fr Door OTR L/R	14.62	47.85
Panel Fr Door INR L/R	9.26	9.03
Panel Fr door Hinge L/R	21.19	21.19

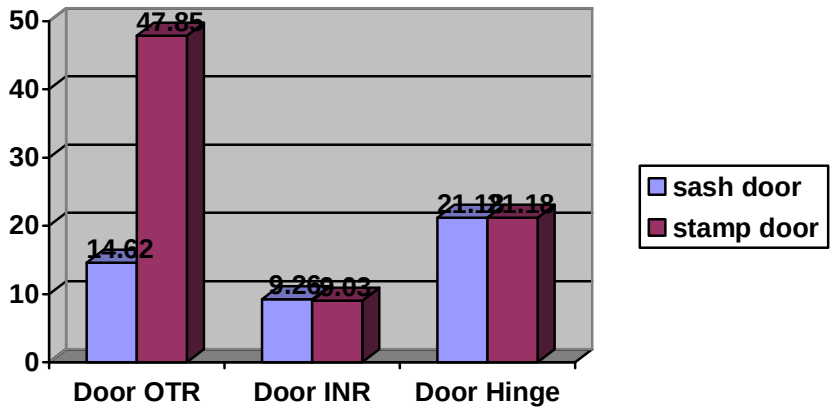

Figure 4.9 Percentages scrap comparison

The bar chart show the different of percentages scrap has been produced in both processes. In door outer part the percentage of scrap has been produce in stamp door is higher than sash door. For door inner part the percentage of the scrap in sash door is higher compare to the stamp door. For overall the stamp door process is higher in scrap producing because using the big die and cause to inaccurate in precise of product. Therefore, in other part the percentage of scrap is lower than sash door process. In sash door the implementation of roll forming process cause to decreasing of percentage scrap producing. Beside that the small size of the die also make the product is precise and accurate when stamp the material.

4.7 MANUFACTURING ASPECT

Table 4.11: Manufacturing aspect differences

Process	Sash door set	Stamp door set
Size of die	Medium (5-10 tons)	Large (10-15 tons)
Price	RM 379.95	RM 431.87

4.7.1 Size of die

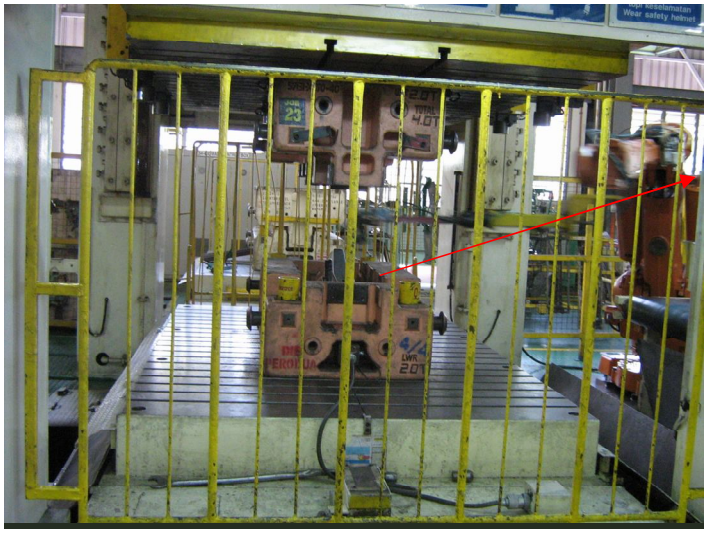

Medium size of die. Medium size of die using in sash door process

Figure 4.10 Medium size of die using in sash door process

Figure 4.11 Die for stamp door process

Based on table above the cost of sash door die is cheap compare to the stamp door die. This happen because the size of die influences the increasing of the price. In sash door process, the dies are medium size (shown in figure 4.10) because stamping process only operates at the bottom of the door and window frame produce by roll forming process. Although the die cost is less than stamp door process but number of die needed is higher than stamp door. In the stamp door process, window frame produce by stamping process so the big size of stamping is needed.

4.7.2 Price

CALCULATION COST FOR SASH DOOR BASED ON MATERIAL

Cost material of part (Panel Fr Door OTR L/R) in sash door

Part weight x price of steel (1kg)

= 5.643 kg x 2 x RM 17

= RM 191.86

Cost material of part (Panel Fr Door INR L/R) in sash door

Part weight x price of steel (1kg)

= 3.33 kg x 2 x RM 17

= RM 113.22

Cost material of part (Panel Fr Door hinge L/R) in sash door

Part weight x price of steel (1kg)

= 2.202 kg x 2 x RM 17

= RM 74.87

Total cost for 1 sash door = RM 191.86 + RM 113.22 + RM 74.87
= RM 379.95

CALCULATION COST FOR STAMP DOOR BASED ON MATERIAL

Cost material of part (Panel Fr Door OTR L/R) in stamp door

Part weight x price of steel (1kg)

= 6.07 kg x 2 x RM 17

= RM 206.38

Cost material of part (Panel Fr Door INR L/R) in stamp door

Part weight x price of steel (1kg)

= 4.43 kg x 2 x RM 17

= RM 150.62

Cost material of part (Panel Fr Door INR L/R) in stamp door

Part weight x price of steel (1kg)

= 2.202 kg x 2 x RM 17

= RM 74.87

Total cost for 1 stamp door = RM 206.38 + RM 150.62 + RM 74.87

= RM 431.87

In sash door process the cost of one complete door is RM 379.95 but in stamp door process the price is RM 431.87. The different of price here cause by two factor:

1) Number of part

In sash door the number of part needed are 28 but in stamp door are 29 parts. The increasing of number parts makes the increasing of cost material.

2) Percentage of scrap

The higher percentage of scrap in stamp door makes the higher in wasting material and increases the cost of material

Table 4.12: SWOT analysis table

	Sash door	Stamp door
Strength	Percentage of scrap produced is lower. In this process only 45.06 % scrap have been produced. The cost die is lower because the die is smaller than other die. There are only 28 parts are produce to assemble become car door.	Time taken to assembly all parts just 5.25 minutes to make this process suitable to increasing the product rate and save more cost. The dies needed in this process are only 38 units so it gives advantage from cost aspect.
Threat	Assembly time is higher. Taking 6.12 minutes to assemble of parts to make it one finishing product.	Size of die is large compare to the sash door dies.
Opportunity	Lower cost and wastage the material makes this process give more profit to company	The method or process using are several it just stamping and welding process.
Weakness	In this process 42 dies are needed to produce one car door.	Percentage of material scrap produced is higher.

Table 4.13: QCD comparison for both processes

	Sash door	Stamp door
Quality	The quality of door is unsatisfied because the door must be added the rubber between the gap of door and the car body. It's proven by Figure 4.17 taken at Proton Waja door.	The quality is satisfy because the when the door is close no gap between door and the body of the car. It's proven by picture taken from proton Persona car door.
Cost	The cost is RM 379.95 for the one complete door production.	The cost is RM 431.75 for one complete door production. That higher than sash door.
Delivery	The assembly process take a lot of time because there are many process had been done before complete the door. Sash door take 6.12 to complete the production.	Time taken for assembly is more faster compare with sash door because only stamping process is involved. Time taking only 5.25 in this process

4.8 QUALITY COMPARISON

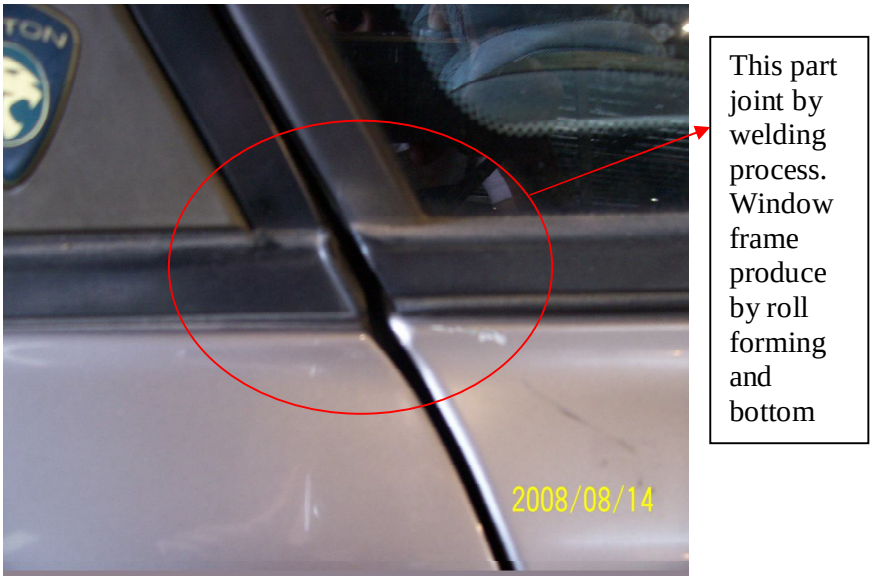

Figure 4.12 The part of door join by welding process

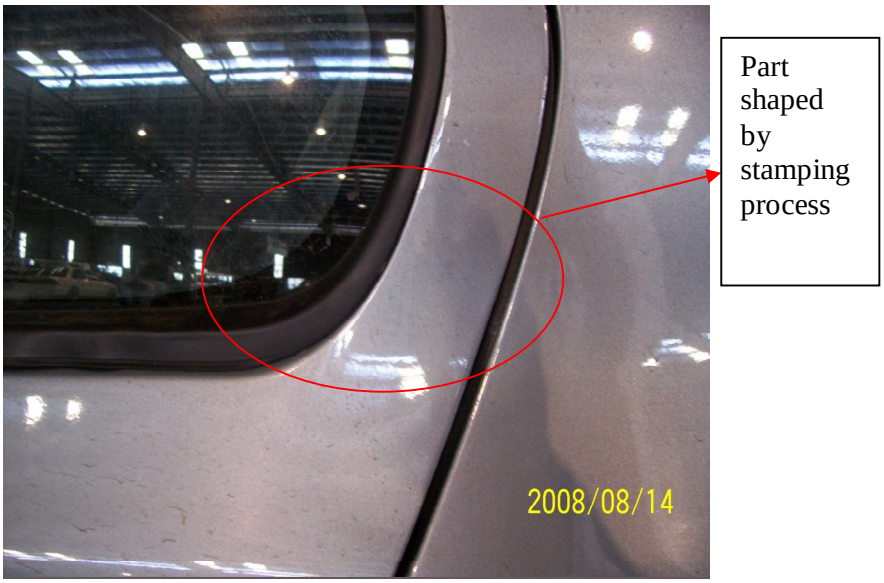

Figure 4.13 The shaped by stamping process

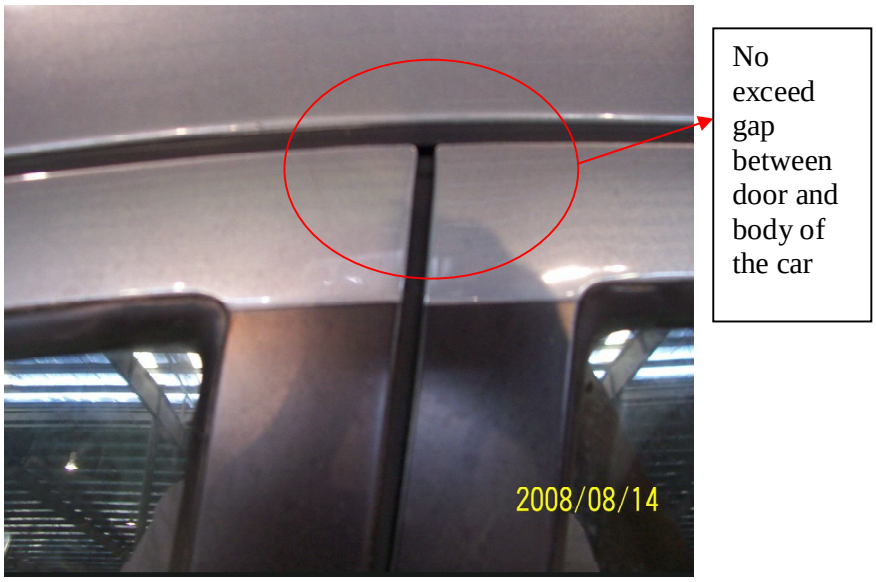

Figure 4.14 No gap between door and body of the car (Stamp door)

Figure 4.15 Exceed gap between door and body of car (Sash door)

Figure 4.16 Example of stamp door (Proton persona)

The door more quality and look neat because all parts have been stamp together.

Figure 4.17 Example of sash door (Proton Waja)

The door view like two part separated each other

4.9 RESULT CONCLUSION

To achieve the objective of this project the experiment must be done and the result will be discuss to obtain which process have more advantage and give more profit to the company. Two type of process here must be analyzed. There are:

a) sash door
b) stamp door

From the analysis have been done sash door is a one of process which lower in material scrap production and minimize the wastage of material. It has proven when percentage of scrap produced is 45.06% and lower than stamp door process. In stamp door process the percentage of scrap produced is 78.07%. In material scrap aspect, the sash door process is most preferred to achieve the objective of this project.

Although the sash door has lower in material scrap producing but sash door process also has weakness from time taken to assembly all part is long compare to stamp door process. In objective this project aims to eliminate the scrap process to make the completeness of product is faster. Beside that in stamp door process the quantity of die needed is lower compare to sash door. The lower of quantity die give more profitable to company because it can save the cost. Based on comparison, each process has advantage and disadvantage. For the conclusion in this chapter the stamp door is most prefer based on objective this project to maximize the profit by saving the cost production. The choosing of stamp door here because time taken to assemble the parts is fast. The production rate for stamp door is higher based on the faster assembly time so the company can produce more car door in one day compare to the sash door. Beside that the die quantity needed in this process is lower than sash door and can save a lot of money for making dies. So the company can maximize the profit.

CHAPTER 5

CONCLUSION

5.1 CONCLUSION OF ANALYSIS

Stamping process is the benefit and very useful process in producing automotive part like door because there are many advantages using this process including faster assembly process, minimum in cost material and more quality of product which proven by analysis that have been done in Chapter 4 . Beside that this process also has their weakness like higher in percentage of material scrap produced. In order to minimize the percentage of scrap, roll forming process is choosing because this process provides a look at a typical progressive roll forming die process showing a strip of metal being progressively shaped by the pairs of mated rolls of roll. This process also can minimize the wastage of material because this process using coils as the raw material. Below is the conclusion for this project:

a) Stamp door process is the best process to give maximizes profit to company because faster in assembly process and lower in die quantity needed. These advantages give more profit to company by reducing the cost.

b) Sash door process has advantage in reducing scrap but slow in assembly process and higher in die quantity needed. Slowing in assembly make the rate of production become slowly so the company can’t produce more of car door. Beside that, higher in quantity of die can increase the cost.

c) Based on quality of product comparison, it can be concluding that the sash door process is more quality because there is only small gap between door and body while door is closed. For sash door there are more gap and have a separation between door and window frame.

d) In stamp door process there is only 1 machine used compare to the sash door process which needed 2 of machine. So the increasing of number machine make higher in capital and also the cost especially maintenance cost.

5.2 RECOMMENDATION AND SUGGESTION

There are several suggestions for improvement and further project:

a) Using the software such as ALGOR for analysis the car door to analyze the capability and limitation for both processes.

b) Comparison with another aspect.

REFERENCES

A. Urena , E. Otero , M.V. Utrilla, C.J.Munez, (2007) .Weldability of a 2205 duplex stainless steel using plasma arc welding. Journal of material processing technology 198 (2007)624-631

Brad Kinsey, Vikram Viswanathan, and Jian Cao (2001). Forming of Aluminum Tailor Welded Blanks. Journal of Materials & Manufacturing, Vol. 110, Section 5, pp. 673-679 SAE: 01M-38

E.O. Correa , S.C. Costa, J.N. Santos(2008) .Weldability of iron –based powder metal materials using pulsed plasma arc welding process. Journal of material processing technology 198 (2008)323-329

H.M. Jiang, S.H. Li, H. Wu, X.P. Chen. (2004)Numerical simulation and experimental verification in the use of tailor-welded blanks in the multi-stage stamping process. Journal of Materials Processing Technology 151 (2004) 316–320

Kevin Sweeney, Ulrich Grunewald. (2003)The application of roll forming for automotive structural parts. Journal of Materials Processing Technology 132 (2003) 9–15

Mustafa A. Ahmetoglu, Dirk Brouwers, Leonid Shulkin Laurent Taupin, Gary L. Kinzel, Taylan Altan(1995).Deep drawing of round cups from tailor-welded blanks. Journal of Material Processing Technology 53 (1995) 684 694

M.B. Silva, R.M.S.O. Baptista, P.A.F. Martins (2004).Stamping of automotive components: a numerical and experimental investigation. Journal of Materials Processing Technology 155–156 (2004) 1489–1496

M. Zampaloni, N. Abedrabbo, F. Pourboghrat. (2003).Experimental and numerical study of stamp hydroforming of sheet metals.International Journal of Mechanical Sciences 45 (2003) 1815–1848

R.L. Kamalapurkar, P.P. Date (2006).Minimizing wastage of sheet metal for economical manufacturing. Journal of Materials Processing Technology 177 (2006) 81–83.

R. Venkata Rao. Evaluation of metal stamping layouts using an analytic hierarchy process method(2004). Journal of Materials Processing Technology 152 (2004) 71–76

Vukota Boljanovic and J.R .Paquin. (2005) .Die design fundamental .3rd edition .Industrial Press Inc.

Yaodong Cui (2007).Exact algorithm for generating two-segment cutting patterns of punched strips. Applied Mathematical Modelling 31 (2007) 1865–1873.
Y.S.Shin ,H.Y.Kim ,B.H.Jeon ,S.I.Oh .(2002).Prototype tryout and die design for automotive parts using welded blank hydroforming Journal of Materials Processing Technology 130-131(2002)121-127

Websites

www.advantagefabricatedmetals.com search on 25 July 2008

www.automotive-technology.com search on 3 march 2008

www.industryweek.com search on 12 February 2008

www.patentstorm.us search on 14 February 2008

www.wikipedia.com search on 7 January 2008

www.zycon.com search on 2 January 2008

APPENDIX A

ANALYSIS COST (WASTAGE COST)

Sash door

Part = Panel Fr Door OTR L/R

Material weight – part weight

6.61kg-5.643kg

= 0.967 kg

Scrap weight x price

=0.967kg x RM 17

=RM 16 .44

Part = Panel Fr Door INR L/R

Material weight – part weight

3.67kg-3.33kg

= 0.34 kg

Scrap weight x price

=0.34kg x RM 17

=RM 5.78

Part = Panel Fr Door Hinge L/R

Material weight – part weight

2.794 kg-2.202kg

= 0.592 kg

Scrap weight x price

=0.592 kg x RM 17

=RM 10.06

Total wasting cost

=RM16.44 + RM 5.78 + RM 10.06

=RM 32.28

Stamp door

Part = Panel Fr Door OTR L/R

Material weight – part weight

11.64 kg-6.07kg

= 5.57 kg

Scrap weight x price

=5.57kg x RM 17

=RM 94.69

Part = Panel Fr Door INR L/R

Material weight – part weight

4.87kg-4.43kg

= 0.44 kg

Scrap weight x price

=0.44kg x RM 17

=RM 7.48

Part = Panel Fr Door Hinge L/R

Material weight – part weight

2.794kg-2.202kg

= 0.592 kg

Scrap weight x price

=0.592 kg x RM 17

=RM 10.06

Total wasting cost

=RM94.69+ RM 7.48 + RM 10.06

=RM 112.23

APPENDIX B

Figure 4.18 Coil of material

Figure 4.19 Window frame

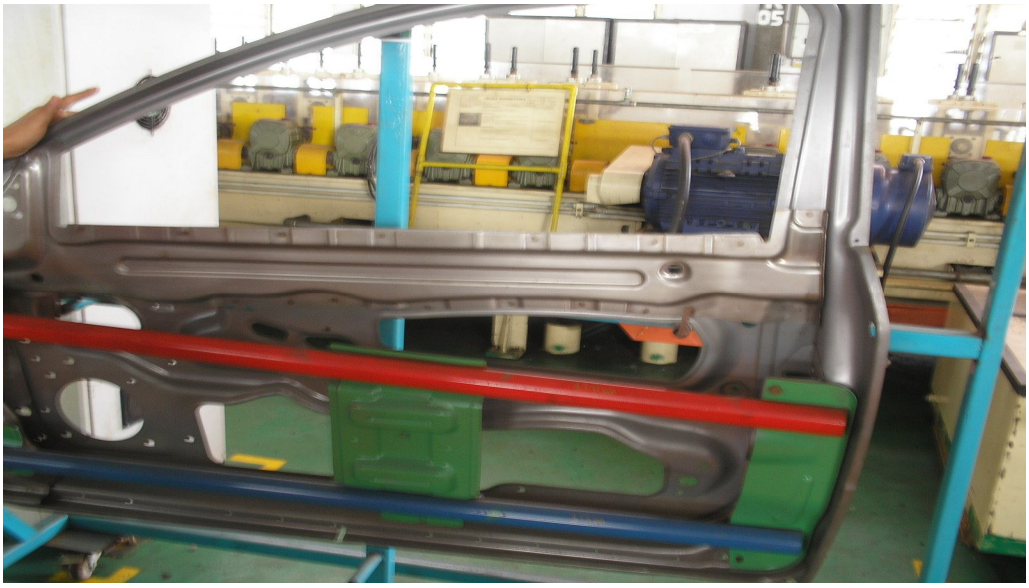

Figure 4.20 Sash door

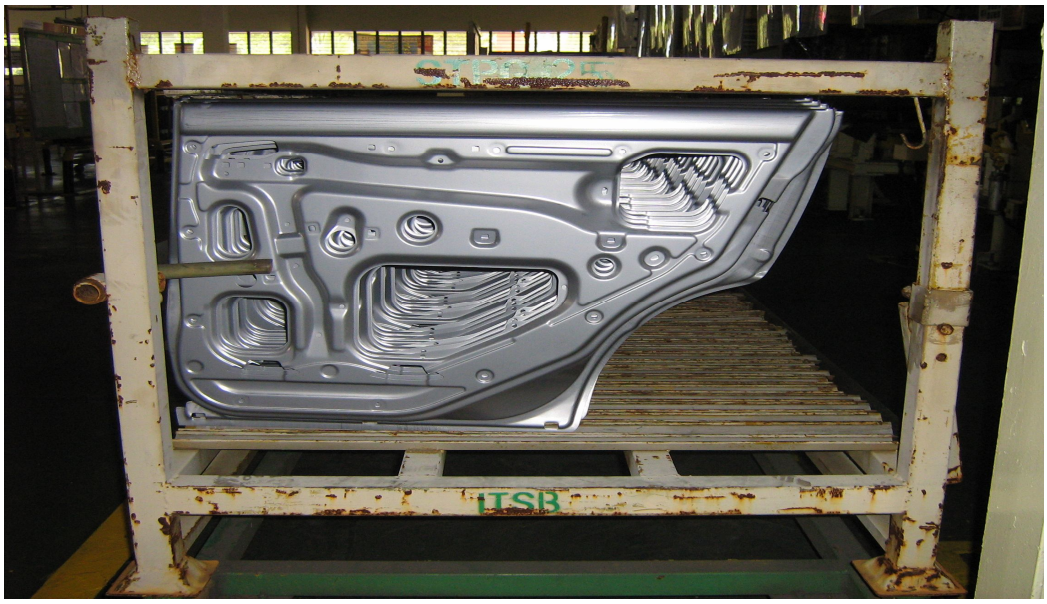

Figure 4.21 Bottom part of car door