SIMULATION TEST OF AUTOMOTIVE CONSTANT VELOCITY JOINT (CVJ) USING COMPUTER AIDED ENGINEERING SOFTWARE

MUHAMMAD ZAKI BIN ZAINAL

UNIVERSITY MALAYSIA PAHANG

SUPERVISOR'S DECLARATION

We hereby declare that we have checked this project and in our opinion this project is satisfactory in terms of scope and quality for the award of the degree of Bachelor of Mechanical Engineering with Automotive Engineering

Signature
Name of Supervisor: MOHD RASHIDI BIN MAAROF
Position: LECTURER
Date:

Signature
Name of Panel: LEE GIOK CHUI, SMP, KMN
Position: LECTURER
Date:

UNIVERSITI MALAYSIA PAHANG

BORANG PENGESAHAN STATUS TESIS ◆

JUDUL: SIMULATION TEST OF AUTOMOTIVE CONSTANT VELOCITYJOINT (CVJ) USING COMPUTER AIDED ENGINEERING SOFTWARE

SESI PENGAJIAN: 2008/2009

Saya, **MUHAMMAD ZAKI BIN ZAINAL (860506-38-7215)**
(HURUF BESAR)

mengaku membenarkan tesis (Sarjana Muda / ~~Sarjana / Doktor Falsafah~~)* ini disimpan di perpustakaan dengan syarat-syarat kegunaan seperti berikut:

1. Tesis ini adalah hakmilik Universiti Malaysia Pahang (UMP).
2. Perpustakaan dibenarkan membuat salinan untuk tujuan pengajian sahaja.
3. Perpustakaan dibenarkan membuat salinan tesis ini sebagai bahan pertukaran antara institusi pengajian tinggi.
4. **Sila tandakan (√)

[ ]	**SULIT**	(Mengandungi maklumat yang berdarjah keselamatan atau kepentingan Malaysia seperti yang termaktub di dalam AKTA RAHSIA RASMI 1972)
[ ]	**TERHAD**	(Mengandungi maklumat TERHAD yang telah ditentukan oleh organisasi / badan di mana penyelidikan dijalankan)
[√]	**TIDAK TERHAD**	

Disahkan oleh:

_____ _____

Alamat Tetap:

684 Lorong Perwira M1/33,
Taman Cicely,
36000 Teluk Intan
Perak

MOHD RASHIDI BIN MAAROF

(Nama Penyelia)

Tarikh:_____ Tarikh:

CATATAN: * Potong yang tidak berkenaan.

** Jika tesis ini SULIT atau TERHAD, sila lampirkan surat daripada pihak berkuasa/organisasi berkenaan dengan menyatakan sekali tempoh tesis ini perlu dikelaskan sebagai SULIT atau TERHAD.

◆ Tesis dimaksudkan sebagai tesis bagi Ijazah Doktor Falsafah dan Sarjana secara Penyelidikan, atau disertasi bagi pengajian secara kerja kursus dan penyelidikan, atau Laporan Projek Sarjana Muda (PSM).

SIMULATION TEST OF AUTOMOTIVE CONSTANT VELOCITY JOINT (CVJ) USING COMPUTER AIDED ENGINEERING SOFTWARE

MUHAMMAD ZAKI BIN ZAINAL

A thesis submitted in fulfillment of the requirements for the award of the degree of Bachelor of Mechanical Engineering with Automotive Engineering

Faculty of Mechanical Engineering

University Malaysia Pahang

NOVEMBER 2008

STUDENT'S DECLARATION

I hereby declare that the work in this thesis is my own except for quotations and summaries which have been duly acknowledged. The thesis has not been accepted for any degree and is not concurently submitted for award of other degree.

Signature:
Name: MUHAMMAD ZAKI BIN ZAINAL
ID Number: MH05035
Date:

Dedicated to my beloved

Mother, Late Father and Sisters

For their support and motivation that they give

during finish this thesis

ACKNOWLEDGEMENT

First I would like to express my grateful to ALLAH s.w.t. as for the blessing given that I can finish my project.

In preparing this paper, I have engaged with many people in helping me completing this project. First, I wish to express my sincere appreciation to my main thesis supervisor Mr. Mohd Rashidi Bin Maarof, for encouragement, guidance, advices and motivation. Without his continued support and interest, this thesis would not have been the same as presented here

The next category people who help me to grow further and influence my project are the colleagues who always help me in order to finish this project. I appreciate very much to them because of the idea and information given.

Last but not least I acknowledge without endless love and relentless support from my family, I would not have been here. Mother and sisters, you all have given me the inspirations and encouragement until these days.

Thank you all.

ABSTRACT

This thesis deals with simulation test of constant velocity joint (CVJ) using computer aided engineering software. The objective of this thesis is to investigate and analyze the stress distribution of CVJ using CAE software. The thesis describes the finite element analysis techniques to predict the failure region on the CVJ and to identify the critical locations of the components. The structural three-dimensional solid modeling of CVJ was developed using the computer-aided drawing software, SolidWork. The strategy of validation of finite element model was developed. The finite element analysis was then performed using CosmosWork. The finite element model of the components was analyzed using the static stress with linear material model approaches. Finally, the stress distribution obtain from the result of analysis are employed as input for the failure region. From the results, it is observed that the analysis using CosmosWork can predict the failure region under fatigue loading. The acquired results tell the failure region occurred at the inner ball hub where it was attach to the shaft and the concentration of the stress occur at that place.

ABSTRAK

Tesis ini membentangkan simulasi penyelidikan terhadap gandar halaju malar (GHM) menggunakan perisian kejuruteraan bantuan komputer. Objektif tesis ini adalah untuk menyiasat dan mengkaji distribusi tekanan terhadap GHM menggunakan perisian kejuruteraan bantuan komputer. Tesis ini menerangkan teknik kajian unsur terhingga untuk menjangka kawasan GHM yang akan mengalami kerosakan dan untuk mengenalpasti lokasi-lokasi kritikal pada GHM. Permodelan struktur pejal tiga-dimensi bagi GHM dibangunkan dengan perisian lukisan bantuan komputer, *SolidWork*. Strategi pengesahan model unsur terhingga dibangunkan. Analisis unsur terhingga dijalankan menggunakan *CosmosWork*. Model unsur terhingga tersebut dikaji menggunakan pendekatan tekanan pegun dengan model bahan linear. Akhir sekali, distribusi tekanan yang didapati daripada analisa kajian menggunakan *CosmosWork* boleh digunakan untuk menjangka kawasan yang akan mengalami kerosakan sekiranya tekanan lesu dilaksanakan. Keputusan yang diperoleh menyatakan bahawa kawasan yang akan mengalami kerosakan adalah pada pusat bebola dalaman yang disambungkan kepada gandar dan penumpuan tekanan terjadi pada bahagian itu.

TABLE OF CONTENTS

CHAPTER 4 RESULT AND DISCUSSION

CHAPTER 5 CONCLUSION AND RECOMMENDATIONS

LIST OF TABLES

LIST OF FIGURES

LIST OF GRAPH

LIST OF SYMBOLS

τ	-	Stress (Tau)
θ_o	-	Initial angle (Theta initial)
θ_i	-	Final angle (Theta final)
σ	-	Stress (Sigma)

LIST OF ABBREVIATIONS

CADD	Computer Aided Architectural Design
CAID	Computer Aided Industrial design
CAD	Computer Aided Design
CADD	Computer Aided Design and Drafting
CAE	Computer Aided Education
CV	Constant Velocity
CVJ	Constant Velocity Joint
DOF	Degree Of Freedom
FWD	Front Wheel Drive
OEM	Original Equipment Manufacturer
UTS	Ultimate Tensile Strength
YS	Yield Strength

LIST OF APPENDICES

CHAPTER 1

INTRODUCTION

1.1 Background

Constant velocity (CV) joints are a particular type of universal joint with the characteristic that they maintain an angular velocity ratio of exactly unity between output and input members at any angle during the revolution for a range of working joint angles [10]. Axles transmit the power from the transmission to the wheels. There are two axles on a front wheel drive car, one on the left and one on the right. Front wheel drive axles have two CV joints, one on either end of the axle. CV stands for "constant velocity", which refers to their ability to smoothly transfer power at an angle. The inner CV joint slides in and out so the axle can increase and decease in length when the car goes over bumps. The outer CV joint allows about 45 degrees rotation so the front wheels can turn to go around corners. There are many types of constant velocity joint such as Rzeppa, Bendix-Weiss, Tripot, Double Offset, and Helical or German Cross Groove Joint[7].

The life of a CV joint varies considerably; however, a typical life is around 4 or 5 years or 70 000 miles on an automobile [4]. Failure of a CV joint is typically considered to have occurred when excessive wear, predominantly in the form of small indentations or grooves in the hardened-steel race tracks, impacts joint performance. The result is usually observed as an audible "clicking" noise or excessive vibration during vehicle maneuvering. The cause may be due to failure of the elastomeric boot seal, allowing grit and other impurities in, and the lubricating media out [11], Alternatively it may he due to normal wear of any of the sliding, rolling or rotating members within the joint. These joint components experience very high loads which are often oscillatory in nature and thus prone to fatigue failure. Operating conditions vary considerably depending on the type of vehicle, size of engine, the driving conditions, the payload, and the characteristics of the driver. The effect of tolerance stack-up and the fit between mating parts created during component manufacture can also have a significant effect on wear and service life [9].

In this project, we want to describe a method to find the maximum load, torque/moment and angle for the CV joint that the component can extant when we apply it. Beside that we also want to analyze the functionality and design using computer aided engineering software (CAE). We also want to know when the CV joint become wear when we apply a load in the component and the time taken. A measuring instrument based on this work has been develop [4], and a patent application has been filed [11]. An important attribute of the new methodology is that it does not require detailed design parameters of the race. This is particularly important considering the wide range of CV joint sizes and types on the market today and the fact that most potential users of the methodology would not have direct access to this information. For the automotive aftermarket, the new methodology provides a standard measure upon which to base serviceability decisions. For the autoindustry OEMs, the methodology provides a measure which could be used to evaluate and quantify CV joint wear on new vehicles undergoing life and performance testing.

1.2 Problem statement

This project is to initiate the simulation of stress/ force using CAE. The project base on Constant Velocity Joint (CVJ) for automotive part. As the result the CVJ will move constantly with the time. When the CVJ rotate it will course the friction on the bearing in constant velocity (CV). Besides that, the load and angle also give the impact to the CVJ when it rotation. The failure/wear of the CVJ will occur when the load, angle and the friction are applied constantly or in high

1.3 Project Objective

To investigate the stress analysis of constant velocity (CV) joint using CAE software

.

1.4 Project Scopes

By stating this project base only on the objectives is not recommended as is too large or too wide to cover and it is important to create a scope for this project. Scopes of this experiment are:

i. Using CAE software to determine the computational stress and finite element
ii. General/common product in automotive industry

CHAPTER 2

LITERATURE REVIEW

2.1 Type of constant velocity joint (CVJ)

2.1.1 Rzeppa

The Rzeppa constant velocity (CV) joint is a ball- bearing type in which the balls furnish the only points or Double - Cardan universal joint - Of driving contact between the two halves of the coupling. A Rzeppa CV joint consists of a star-shaped inner race, several ball bearings, bearing cage, outer race or housing, and a rubber boot. The inner race (driving member) is splinted to the inner axle shaft. The outer race (driven member) is a spherical housing that is an integral part of the outer shaft; the balls and ball cage are fitted between the two races. The close spherical fit between the three main members supports the inner shaft whenever it is required to slide in the inner race, relieving the balls of any duty other than the transmission of power. The movement of the balls is

controlled by the ball cage. The ball cage positions the balls in a plane at right angles to the two shafts when the shafts are in the same line. A pilot pin, located in the outer shaft, moves the pilot and the ball cage by simple leverage in such a manner that the angular movement of the cage and balls is one half of the angular movement of the driven shaft.

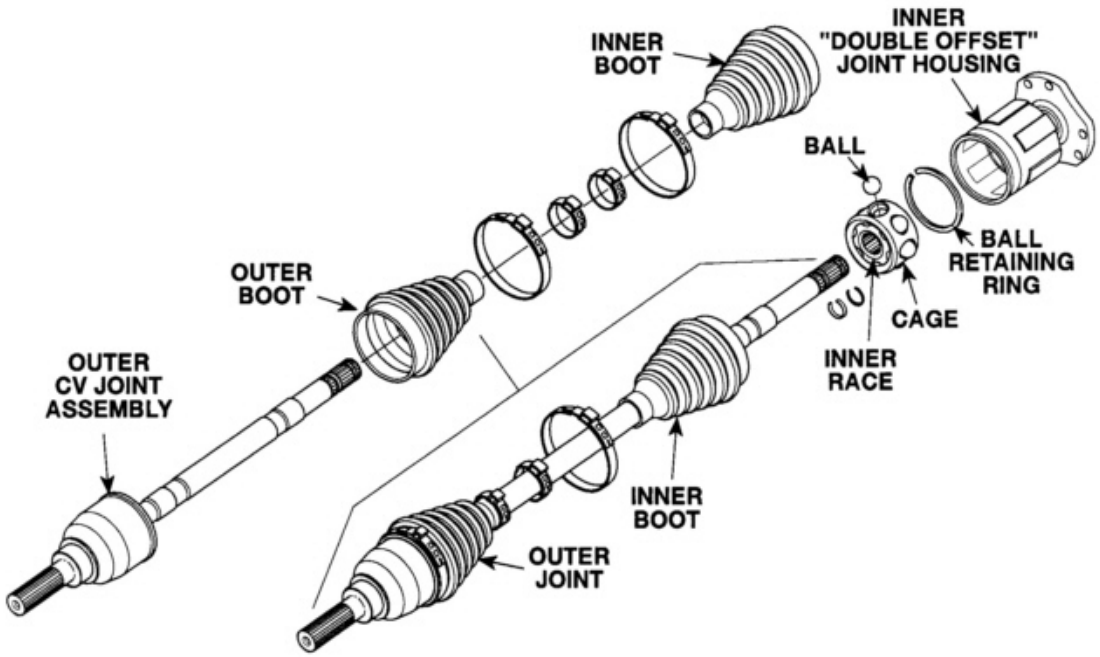

Figure 2.1 : Exploded view of a Rzeppa CV joint

2.1.2 Tripod Constant Velocity Joint

A tripod or ball and housing CV joint consists of a spider, usually three balls, needle bearings, outer yoke, and boot. The inner spider is splined to the axle shaft with the needle bearings and three balls fitting around the spider. The yoke then slides over the balls. Slots in the yoke allow the balls to slide in and out and also swivel. During operation, the axle shaft turns the spider and ball assembly. The balls transfer power to the outer housing. Since the outer housing is connected to the axle stub shaft or hub, power is sent through the joint to propel the vehicle.

2.1.2.1 Center Support Bearings

When two or more drive shafts are connected in tandem, their alignment is maintained by a rubber bushed center support bearing. The center support bearing bolts to the frame or underbody of the vehicle. It supports the center of the drive shaft where the two shafts come together. A sealed ball bearing allows the drive shaft to spin freely. The outside of the ball bearing is held by a thick, rubber, doughnut-shaped mount. The rubber mount prevents vibration and noise from transferring into the operator's compartment. A bearing similar to the center support bearing is often used with long drive lines, containing a single drive shaft. This bearing is called a pillow block bearing

It is commonly used in drive lines that power auxiliary equipment. Its purpose is to provide support for the drive shaft and maintain alignment. When used at or near the center of the shaft, it reduces the whipping tendency of the shaft at high speed or when under heavy loads. The construction of pillow blocks varies. The simplest form is used on solid power takeoff drive shafts, which is no more than a steel sleeve with a bronze bushing

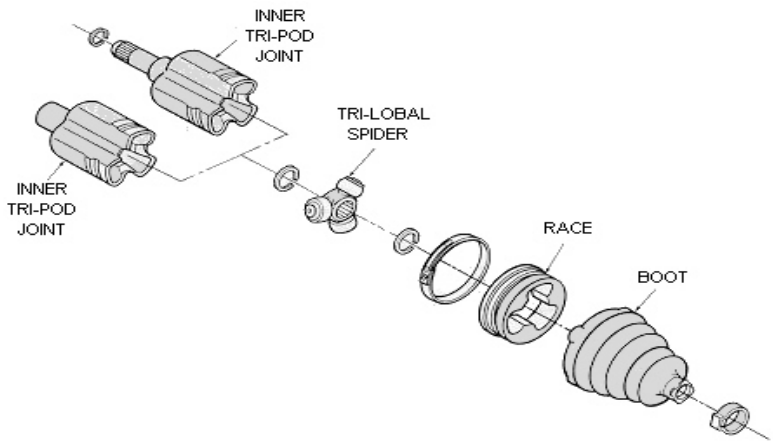

Figure 2.2: Exploded view of a Tripod CV joint

2.1.3 Bendix –Weiss

The Bendix-Weiss constant velocity (CV) joint also uses balls that furnish points of driving contact, but its construction differs from that of the Rzeppa in that the balls are a tight fit between two halves of the coupling and that no cage is use. The center ball rotates on a pin inserted in the outer race and serves Bendix-Weiss Constant Velocity (CV) Joint as a locking medium for the four other balls. The driving contact remains on the plane that bisects the angle between the two shafts; however, it is the rolling friction between the four balls and the universal joint housing that positions the balls. When both shafts are in line, that is, at an angle of 180 degrees, the balls lie in a plane that is 90 degrees to the shafts. If the driving shaft remains in the original position, any movement of the driven shaft will cause the balls to move one half of the angular distance. For example, when the driven shaft moves through an angle of 20 degrees, the angle between the two shafts is reduced to 160 degrees. The balls will move 10 degrees in the same direction, and the angle between the driving shaft and the plane in which the balls lie will be reduced

to 80 degrees. This action fulfills the requirement that the balls lie in the plane that bisects the angle of drive.

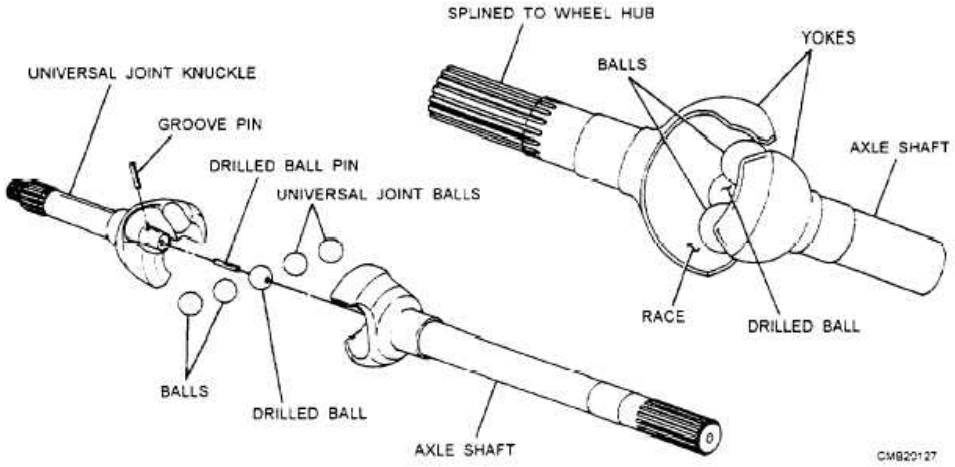

Figure 2.3: Exploded view of a Bendix – Weiss

2.1.4 Double – offset

The double - offset is another pluge joint commonly used as the inner joint on FWD shaft. It consists of an inner race, six steel balls, a cage and an outer race. Except for the outer race, which is relatively long and straight, this joint resembles o Rzeppa joint. [16]

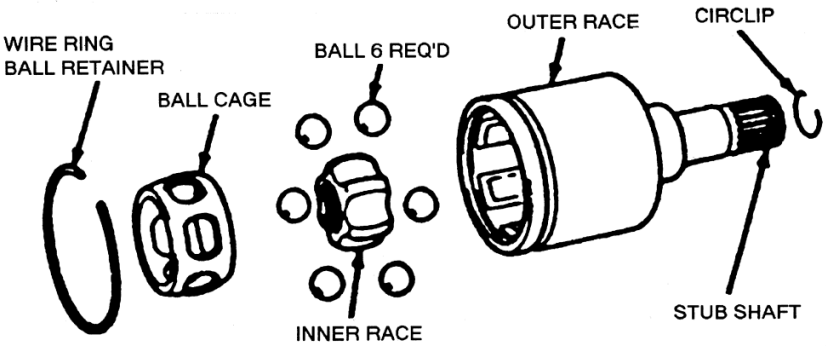

Figure 2.4: Exploded view of a Double Offset CV joint

2.1.5 Helical or German Cross Groove Joint

A disc shaped type of inner CV joint that uses balls and V-shaped grooves on the inner and outer races to accommodate the plunging motion of the halfshaft. The joint usually bolts to a transaxle stub flange

2.2 A two phase circular regression algorithm for quantifying wear in CV joint ball race track

2.2.1 Failure modes and joint life

Although the inner and outer race geometry of CV joints is somewhat different than the regular bearing, the principle of rolling and sliding contact between ball and a groove in a lubricated environment are shared both. The wear mechanisms and failure mode can be correlated and extensive research on a regular ball bearing [2, 13]. The common causes and mode are summarized below:

2.2.1.1 Cavities, indentations or grooves form within the race track when a foreign particles make their way into the bearing and are pressed into the groove surface by the ball

2.2.1.2 Flaking occurs when the number of surface fatigue cranks, along very small, increase to the point where a fragment of race material breaks off.

2.2.1.3 Crack and fracture are typically the result of severe bearing overload. Cracks may also result from material flaws or improper race grinding.

2.2.1.4 Cage failure occurs due to fatigue failure and abrasive wear, poor lubricant is usually to blame. The rotating balls will produce wear on the cage when the lubricant is sparse. If this continues, cage breakage and bearing seizure can occur

2.2.2 **Dimensional factors affecting joint life**

In the Rzeppa joint, the constant velocity plane passes through the centre of the six balls. As the operating angle changes, the plane of the ball move relative to outer race to maintain their joint angle bisection [6]. The ball transmits torque from the inner race to the outer race, or housing and must continuously traverse along the groove to remains in the constant velocity plane. In the Rzeppa CV joint, the ball rides in an elliptical or pseudo-elliptical race track cross section, thus providing two point of contact either side to support the ball as shown in figure 2.11. The pseudo-elliptical race track in the figure 2.11 (b) is often preferred to the true elliptical form as it is more easily machined. The pseudo-elliptical race is formed from two segment of a circle with offset centers. The design contact angle is typically 45^0, although other angles have been employed.

Any clearance between the balls and the groove will allow the contact angle to increase during torque transmission. Figure 2.12 shows inner and outer contact angles before and after torque is applied to the joint when clearance exists between the ball and the races. The inner and the outer contact angle are θ_i and θ_o respectively and equal the nominal contact angle of 45^0. On the figure, the effect of the gaps allows the torque to shift the races relative to each other. This alters the contact angle as θ_i and θ_o are both clearly greater than the original 45^0. It increases the contact pressure upon the races, accelerating fatigue and thus decreasing joint life. Taniyama [8] shows experimentally that service life may be reduced by half with only a 10% large pr5essure angle.

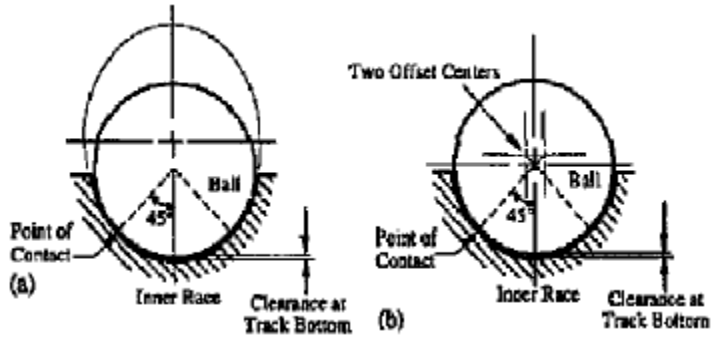

Figure 2.5: Rzeppa ball track design: (a) elliptical races (b) pseudo-elliptical

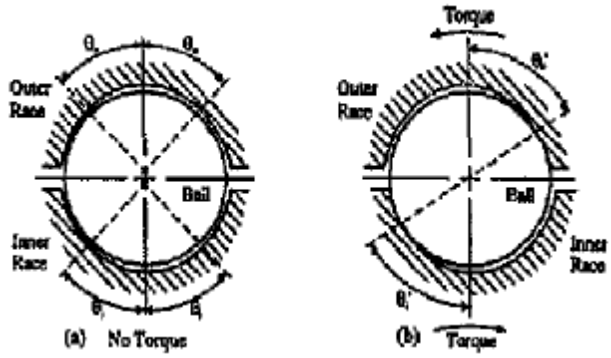

Figure 2.6: Change of constant angle with application of torque

2.2.3 **Wear measuring principle**

The wear may have very little or so depth and may be only a highly polished area of the track. Alternative, it may be a physical groove as deep as 100 μm (0.004 in) and of single, double or multiple forms in such severe cases of wear the part would be scrapped. Small amounts of wear on the race tracks can be removed by buffing or polishing, which is often termed “refurbishing”. Large amounts of wear may be accommodated by regrinding the tracks and utilizing oversized ball.

The Rzeppa geometry utilizes an elliptical section profile to support the ball [1], combined with a circular translation profile giving the angular motion between the two shaft of the joint. A number of surface probing concepts were explored and the solution chosen was utilize the joint ball itself as the probe tip in order to automatically align the center of the race and its datum. The term approaches simply, the "ball-as-the-probe" principle. The measuring task involves translating the ball along the track while monitoring ball coordinates. In this way, the effect of wear scars or grooves on the behavior of the ball during operation may be directly measured.

2.3 Software

For designing and analysis, the CAD (Computer aided design) using software SolidWork is used to design part while the CAE (computer aided engineering) using CosmosWork is use to analysis the part. From the result obtain, we can predict the failure of part or component. Moreover, the software is use widely in industry. The analysis done not to obtain the result but to train the user be familiar with the software.

2.3.1 CAD

Computer aided design is wide use especially to assist the engineer, architect and other design professional to design something. CAD is sometimes translated as "computer-assisted", "computer-aided drafting" or similar phrase. Related acronyms are CADD, which stands for "computer-aided design and drafting", CAID for "computer-aided industrial design" and CAAD for "computer-aided architectural design" (Wikipedia 2007). All term are similar but there are differences in term of usage and applied.

CAD is a new approach to replace the old style in designing. Moreover, the CAD is not just for design but there are more functions included in now days CAD software.

CAD function is to design, develop and optimize product and extensively used to design the tool and machinery in manufacturing field. Moreover, it also used to design of all types of building from small residential types to the largest commercial building and industrial structure.

CAD is used to detail the physical of component through 3D design and 2D drawings and CAD also provided the analysis of the strength and dynamic of the assemblies. CAD approach can save time and cost to develop a model because it enables the designer to layout and develop the work on the screen and save them for future editing. CAD are widely used in the aichitecture, engineering and construction, mechanical engineering, electronic design automation, electrical engineering, manufacturing process planning, industrial design, software application, apparel and textile CAD and garden design.

There are many CAD software products available in the market. The most provider that produces the CAD software are Autodesk, Dassault Systemes, PTC and UGS corporation. The CAD software can classified into three types, the 2D drafting system, mid-range solid features modelers and high-end 3D hybrid systems. The 2D drafting system software example AutoCAD and Microstation, while mid-range 3D modelers software example Inventory, Topsolid, SolidWork, SolidEdge, Alibre Design and VariCAD. The high-end 3D system example Pro/ENGINEER, CCATIA, NX (Unigraphic). However these classification cannot be applied to strictly as many 2D system and have 3D modules, the mid-range system are increasing their surface

functionality and the high-end system have developed their user interface in the direction of interactive Windows systems (Wikipedia 2007)

2.3.2 **CAE**

CAE used by the engineer to supporting the task such as analysis, simulation, design, manufacture, planning, diagnosis and repair. The software that supports these modes is considered as the CAE tool. In regards to information network, CAE systems individually considered a single node on a total information network and each node may interact with other nodes on the network (Wikipedia 2006). The term CAE was Coined by Dr. Jason Lemon, founder of SDRC in late 70's. This term is use to describe the use of computer technology in the in the past. This definition is however better known today by the term CAx and PLM (Wikipedia 2006)

CAE areas covered include the stress analysis on components and assemblies using FEA (finite element analysis), thermal and fluid analysis, kinematics, mechanical events simulation for operation such as casting, molding and die press forming and optimizing of the product or process. There are three phases in any CAE task, the pre-processing where the model and environmental factors to be applied to it is define, analysis solver and the post-processing of result.

The CAE software available such as LSTC's LSDYNA and ESI's PAMCRASH is used for automotive crashworthiness and occupant safety and the other tool like MSC's Patran and ADAMS software and UGS's Scenario and Nastran packages are used in a variety of structural and analysis tasks.

2.3.3 **Introduction to SolidWork**

SolidWork is a 3D computer-aided design (CAD) program that runs on Microsoft Windows platforms, developed by SolidWorks Corporation, a subsidiary of Dassault Systemes, S. A (Wikipedia 2007). To complete with other product such as Pro/ENGINEER and SDRC I-DEAS this software is introduced in 1993.

This software approach is to modeling and assembling the parts. The creation of a solid or surface in 3D modeling environment is typically begins with the definition of topology in either a 2D or 3D sketch. The topologies define the connectivity and certain geometric relationships between vertices and curve both in the sketch and external to the sketch (Wikipedia 2007). The dimension is added to this topology to determine the length and sizes for the curve and locations for the vertices in conjunction with topological constraints. The dimension added are termed “parameter” because they can be charged either independently or by “parameter” created prior to their creation. Moreover, SolidWork also provided a feature-based system to create volume or modifications. This feature can rolled back the system to the previous states in case something must be charged or multiple configurations of the same part. The component is defining the relative positions of the components to each other.

SolidWorks CAD software is available in four editions, SolidWorks, SolidWorks Student Design Kit, SolidWork Office, SolidWorks Office Professional and SolidWork Office Premium. All four editions is difference in term of features included, add-in program and limited define element analysis program called Cosmos Xpress and mould filling program called MoldflowXpress.

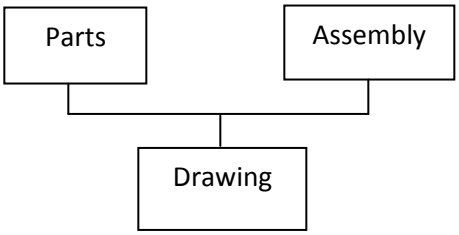

Figure 2.7: Design methodologies in SolidWorks (Wikipedia 2007)

2.4 Introduction to CosmosWork 2008

2.4.1 Element type and geometries

CosmosWorks currently includes solid continuum elements and curved surface shell elements (thin and thick). The shells are triangular with three vertex nodes or three vertex and three mid-edge nodes. The sesolids are tetrahedra with four vertex nodes or four vertex and six mid-edge nodes. They use linear and quadratic interpolation for the solution based on whether they have two or three nodes on an edge. The linear elements are also called simplex elements because their number of vertices is one more than the dimension of the space.

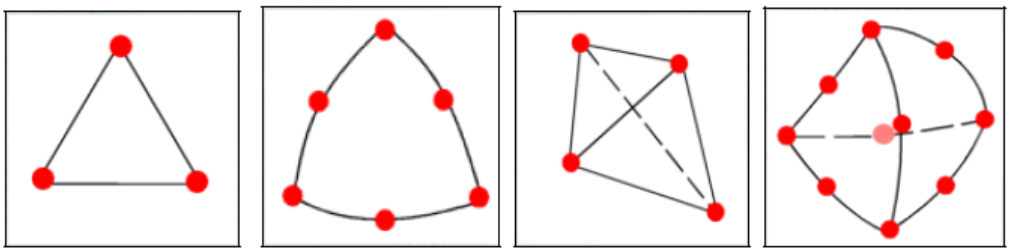

Figure 2.8: Shell element

The solid elements have three translational degrees of freedom (dof) as nodal unknowns, for a total of 12 or 30. The shell elements have three translational degrees of freedom as well as three rotational degrees of freedom, for a total of 18 or 36. The CosmosWorks symbol for translational and rotational dof are shown in green in Figure 2.9, along with the corresponding force and couple vectors in pink. Since finite element solutions are based on work-energy relations, the word corresponding means that their dot product represents mechanical work done at the point. The difference in dof types means that moments or couples can only be applied directly to shell models. Solid elements require that couples be indirectly applied by specifying a pair of equivalent pressure distributions, or an equivalent pair of equal and opposite forces at two nodes on the body.

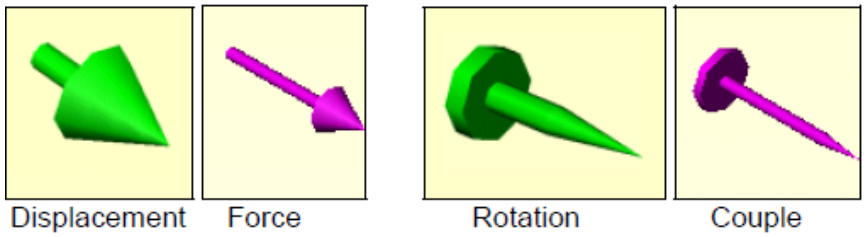

Figure 2.9: Nodal symbols

When a model can involve either translations or rotations as dof they are often referred to as generalized displacements. The CosmosWorks nodal symbols for unknown generalized displacement dof's for the solid nodes (top) and shell nodes are seen in Figure 2.10. You almost always must supply enough restraints to prevent any model from undergo a rigid body translation or rigid body rotation. For simplicity many finite element examples incorrectly apply complete restraints at a face, edge or node. That is, they enforce an Immovable condition for solids or a Fixed condition for shells. Actually determining

the type of restraint, as well as where the part is restrained is often the most difficult part of an analysis.

3D symbol	
3D symbol (the arrows are for translations and the discs are for rotations)	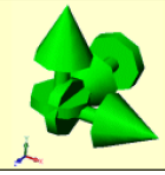

Figure 2.10: 3D sysmbol

2.4.2 Symmetry dof on a flat plane

A plane of symmetry is flat and has mirror image geometry, material properties, loading, and restraints. You need to understand the symmetry restraints that are applied on such planes for solids and for shells. Figure 2.11 shows that for both solids and shells the displacement perpendicular to the symmetry plane is zero, while for shells have the additional condition that the in-plane component of its rotation vector is zero. Of course, the symmetry plane conditions can be stated in a different way. For a solid element translational displacements parallel to the symmetry plane are allowed. For a shell element rotation is allowed about an axis perpendicular to the symmetry plane and its translational displacements parallel to the symmetry plane are also allowed.

Attribute	Value
DOFs restrained for solid meshes	1 translation
DOFs restrained for shell meshes	1 translation and 2 rotations
3D symbol	 solid mesh  shell mesh
Selectable entities	Flat faces only

Figure 2.11: Both solids and shells the displacement perpendicular to the symmetry plane is zero

Table 2.1: Restrains of solid stress analysis

Restrain types	**Solid Element Definition**
Fixed or Immovable	All three translations are zero on face, edge, or vertex.
Hinge	On a cylindrical face, only the circumferential displacement is allowed
On cylindrical face	The cylindrical coordinate displacements normal to and/or on the cylindrical surface are given
On flat face	Displacements normal to and/or tangent to a flat face are given
On Spherical face	The spherical coordinate displacements normal to and/or on the spherical surface are given.
Roller/Sliding or Symmetry	Two displacements tangent to a flat face are allowed.
Use reference geometry	A face, edge, or vertex can translate a specified amount relative to a reference plane and axis

Table 2.2: Restrain for mid-surface shell analysis

Restrain type	**Mid-surface Shell Definition**
Fixed	All translations and rotations are zero on an edge, or vertex
Hinge	On a cylindrical face, only the circumferential displacement is allowed.
Immovable	All three translations are zero on a face, edge or vertex
On cylindrical face	The cylindrical coordinate displacements and rotations normal to and/or on the cylindrical surface are given
On flat face	Displacements and rotations normal to and/or tangent to the flat face are specified.
On Spherical face	The spherical coordinate displacements and rotations normal to and/or on the spherical surface are given
Roller/Sliding Symmetry	Two displacements tangent to a flat face and the rotation normal to the flat face are allowed.
Use reference geometry	A face, edge, or vertex can translate and or rotate a specified amount relative to a reference plane and axis

Table 2.3: Restraints for picked-surface shell analysis

Restrain type	**Picked-surface Shell Definition**
Fixed	Translations and rotations are zero on surface edge or vertex.
Hinge	On a cylindrical face, only the circumferential displacement is allowed.
Immovable	All three translations are zero on surface, its edge, or vertex
On cylindrical face	All three translations are zero on surface, its edge, or vertex
On flat face	Displacements and rotations normal to and/or tangent to the flat face are given.
On Spherical face	The spherical coordinate displacements and rotations normal to and/or on the spherical surface are given
Roller/Sliding Symmetry	Two displacements tangent to a flat face and the rotation normal to the flat face are allowed.
Use reference geometry	A face, edge, or vertex can translate and or rotate a specified amount relative to a reference plane and axis

Table 2.4: Load conditions for solid stress analysis

Load Type	**Solid Element Definition**
Apply force	The total force on a face, edge, or vertex is given relative to a single edge or axis direction.
Apply normal force	The total force normal to a face, at its centroid, is specified and converted to an equivalent pressure.
Apply torque	The total torque on a face is specified with respect to an axis and converted to an equivalent pressure
Bearing Load	On a cylindrical surface give the total force in a Cartesian X or Y direction to convert to a sine distribution pressure
Centrifugal	The angular acceleration and angular velocity are given about an axis, edge, or cylindrical surface
Connectors	See CosmosWorks help files
Gravity	The gravitation acceleration value is given and oriented by an axis, edge, or a direction in or normal to a selected plane
Remote load	See CosmosWorks help files
Temperature	Not recommended. Transfer from thermal analysis

Table 2.5: Load conditions for mid-surface shell analysis

Load Type	**Mid-surface Shell Definition**
Apply force	The total force on a mesh face is specified. Or, given on a side face or edge to define the mid-surface edge or vertex value, respectively.
Apply normal force	The total force normal to a face, at its centroid, is specified and converted to an equivalent pressure.
Apply moment	The total moment on a mesh face is specified. Or, given on a side face or edge to define the mid-surface edge or vertex value, respectively.
Apply torque	The total torque on a face is specified with respect to an axis and converted to an equivalent pressure
Bearing Load	On a cylindrical surface give the total force in a Cartesian X or Y direction to convert to a sine distribution pressure
Centrifugal	The angular acceleration and angular velocity are given about an axis, edge, or cylindrical surface
Connectors	See CosmosWorks help files
Gravity	The gravitation acceleration value is given and oriented by an axis, edge, or a direction in or normal to a selected plane
Remote load	See CosmosWorks help files
Temperature	Not recommended. Transfer from thermal analysis

Table 2.6: Load conditions for picked-surface shell analysis

Load Type	**Picked-surface Shell Definition**
Apply force	The total force on a mesh face is specified. Or, given on the picked surface edge or vertex value
Apply normal force	The total centrodial force normal to a picked surface face is specified and converted to an equivalent pressure.
Apply moment	The total moment on a mesh face is specified. Or, given on the picked surface edge or vertex value
Apply torque	The total torque on a picked surface face is specified with respect to an axis and converted to an equivalent pressure
Bearing Load	On a picked cylindrical surface give the total force in a Cartesian X or Y direction for a sine distribution pressure.
Centrifugal	The angular acceleration and angular velocity are given about an axis, edge, or cylindrical surface.
Connectors	See CosmosWorks help files
Gravity	The gravitation acceleration value is given and oriented by an axis, edge, or a direction in or normal to a selected plane.
Remote load	See CosmosWorks help files
Temperature	Not recommended. Transfer from thermal analysis

CHAPTER 3

METHODOLOGY

3.1 Introduction

This chapter will further describe the study framework for the simulation test of automotive constant velocity joint (CVJ) functionality using computer aided engineering software. This chapter will be most crucial part in completing this study course. Study flow will going to be smooth by following the right pace of progress. So, a good method of investigation is required in fulfilling the study objective thus, achieving triumphant. Not only the valuable information will help the student to complete their course also, maybe will help researcher out there in finding the answer to the problems of ours daily life.

3.2 Flow Chart of Methodology

Flowchart shown the flow work has done in this research of the simulation test of CVJ. In this chapter, the research of CVJ's is very important to get enough knowledge and information about the topic and case study. Firstly make a research on CVJ by literature review. All the information that related with CVJ was collected either from internet, journals and books. After that find out the value that are use for the experiment data from the previous researcher.

Study more detail about the type of the CVJ that can use as a model for the simulation. Beside that the, the load, rotation speed, torque and angle also will be study for this simulation. The load, rotation speed, torque and angle will be applied during the test to see the impact when the simulations begin and the result that will be generate from the test. Lastly, from the simulation result the comparison between experimental and the simulation can be obtain. If don’t have any obstacle, start with thesis writing at the end of this report.

Below is the flow chart showing a step by step of executing the investigation and detail more on will be explained later:

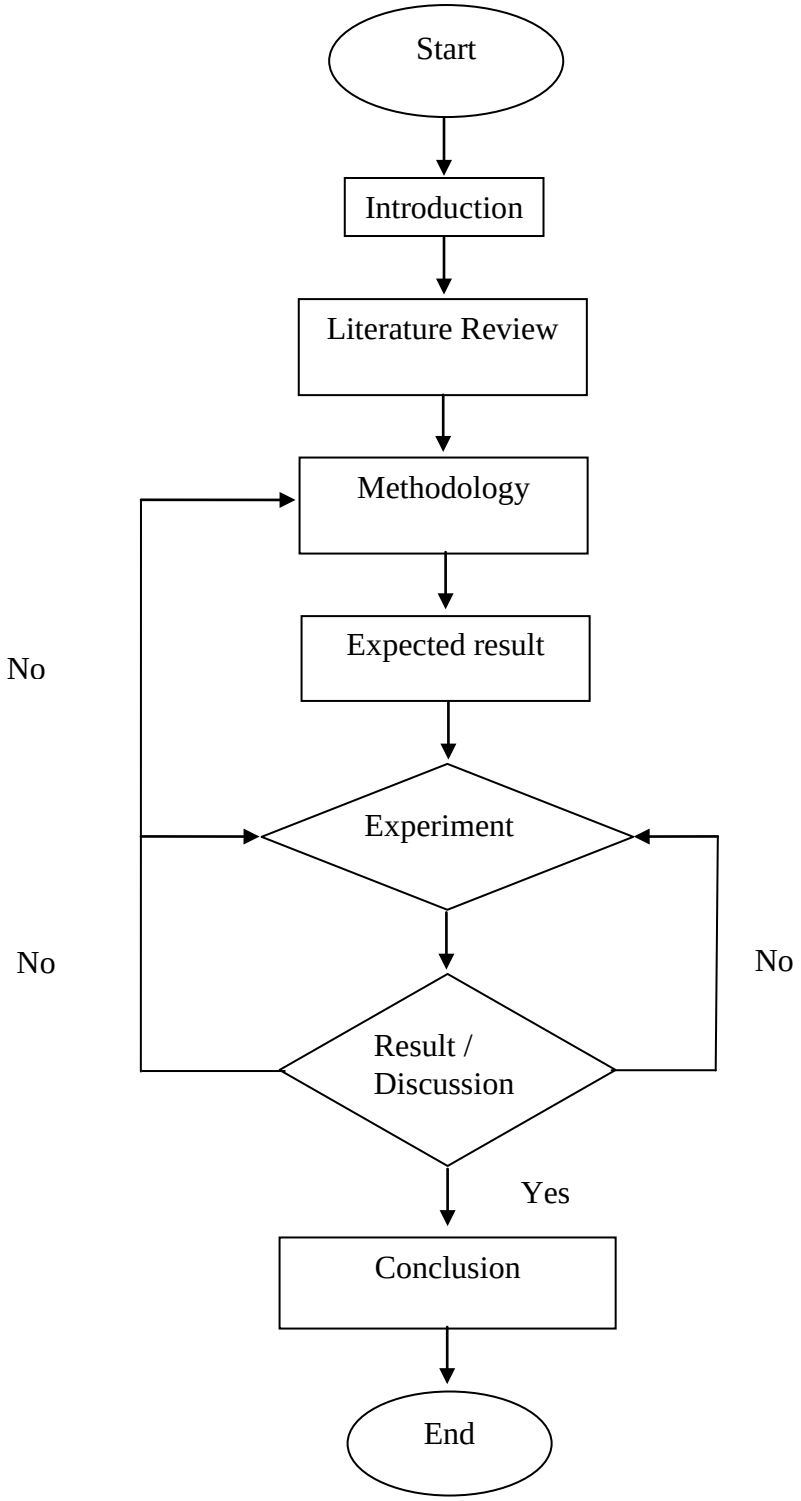

Figure 3.1: Methodology flow chart

3.3 Literature Review

In the literature review, all of the information needed is retrieved as to increase more knowledge in comprehending the subject matter that is mostly on the type of constant velocity joint (CVJ), the test and the method that has apply by the previous researcher. For an example before apply the load, angle and the rotation in the software that are using, the CVJ must be design in the SolidWork using the reverse engineering method. So an abundant resource of input has to be digested with enthusiasm. Reading books, browsing the internet, having discussion with supervisor has helped a lot in collecting the resources.

3.4 Identify process and main consent

After an ample input on has been retrieved, the processes and the main consents are identified giving a clearer view on the investigation of simulation test on the CVJ. With the help from experienced assistant, identifying processes and main consents seems easier.

3.5 Formulate aims and objective

The simulation tests will use the same material when change the parameter then formulated in term of aim and objective as to sets the scope of the investigation on the study. Than find the cause of the failure. Lastly, an exact value can be applied according to overall result and finding.

3.6 Method of investigation and Solution

After researching was done, one type of CVJ had been choosing to make the test that is Double Offset Joint. The CVJ that had chosen will be test using the method to know the failure / wear of the CVJ.

3.6.1 Drawing using SolidWork

The CVJ that have been choose need to redraw in the SolidWork using the reverse engineering method. The dimension of the CVJ has been taken using Vernier caliper. All measurement units are in millimeter (mm). For this CVJ, they all have 8 parts to draw. The parts are:

i. Cover
ii. Outer ball hub
iii. Inner ball hub
iv. Steel ball (6 part)
v. Shaft (2 part)

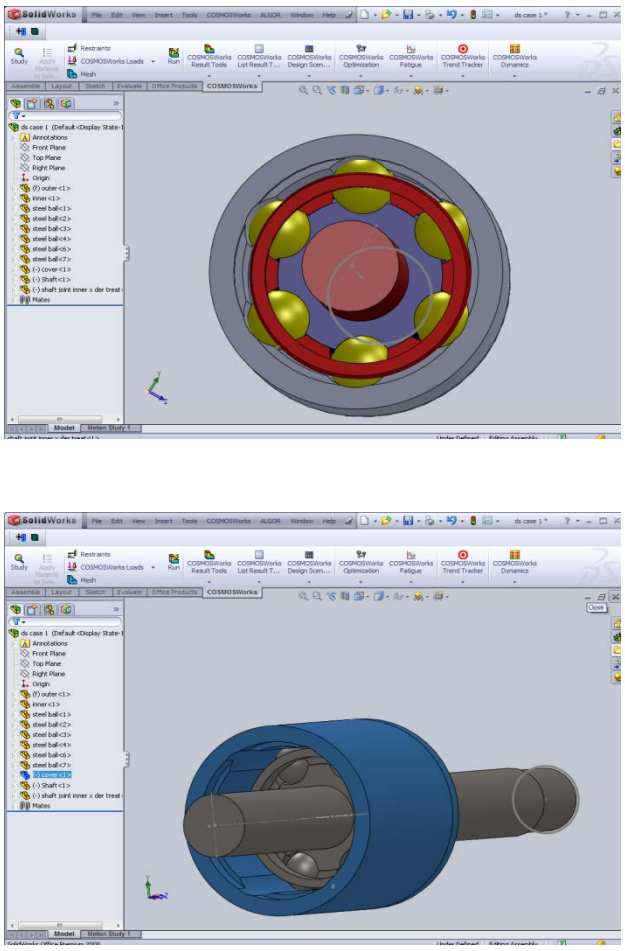

Figure 3.2: Drawing using SolidWork

3.6.2 Analysis using CosmosWork

After redraw the CVJ in the SolidWork, the pictures are import in the CosmosWork to be analyzed. The picture was saving in IGES file in CosmosWork and open in the same file in CosmosWork r to be analyzed. For the analysis in CosmosWork some parameters have been measure. The parameters are rotation speed, torque and angle. This values been taken from the previous researcher. These value will be use to analyzed the CVJ model in CosmosWork. This simulation test will give the result for the stress, displacement and strain in the CVJ when the parameter applied to the CVJ.

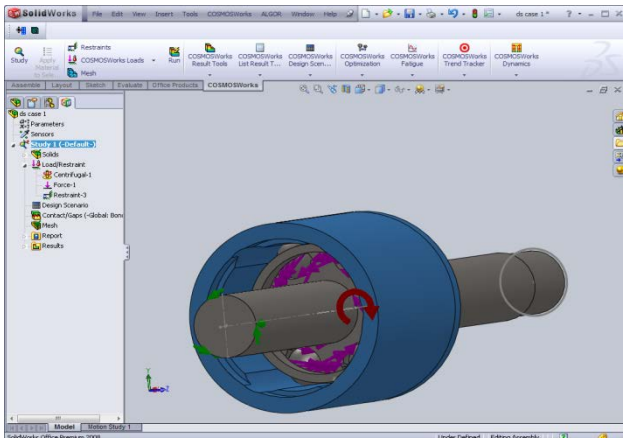

Figure 3.3: Analysis using CosmosWork

3.6.3 Type of analysis

For analyze this CVJ one method have been choose to get the result when the case is running. The method that has been chooses is a method that applying rotation speed, torque and bending angle in the shaft and also in the inner ball hub. After have applying the parameter in the CVJ, the test will be running to get the result.

3.6.4 Rotation speed

Rotation speed is used to measure the cycle of the CVJ in one minute or revolution per minute (rpm). The value range of rotation speed is between 100 to 3000 rpm. These rotation value speeds have been taken from the previous researcher. For the simulation test, 1000 rpm, 2000 rpm and 3000 rpm have been used. This value of rpm has been applied to the CVJ to run the analysis.

3.6.5 Torque

Torque (τ) or moment (of force), is a pseudo-vector that measures the tendency of a force to rotate an object about some axis [15] (center). The magnitude of a torque is defined as the product of a force and the length of the lever arm [17] (radius). Just as a force is a push or a pull, a torque can be thought of as a twist. In the previous research the values that have been used in range 0 to 1000 Nm. For the simulation test, 100 Nm, 300 Nm, 600 Nm and 1000 Nm have been used. This value has been applied to the CVJ to run the analysis for every case.

3.6.6 Angle of rotational

Angle of rotational is needed to move the shaft of the CVJ. Angle of rotation in this simulation test has been set up for 5^0, 6^0 and 7^0. From this angle of rotation, the maximum of the shaft rotation can be estimate during the rotation.

3.7 Running the simulation of the CVJ

After all parameters that should be considers has satisfied, the simulation will be running in CosmosWork software to get the results. The results are important in order to make comparison of both bumper beams.

3.8 Data Collection

The data will be collected while doing the simulation test and graph will be done after the simulation base on the result from the simulation. After doing the simulation test, the data and graph that had been collected will be analyzed and scrutinized. The discussion and comparison will be done based on the result occur.

Table 3.3: Example of data collection table

1. 100 Nm

Speed, RPM	Angle (Degree)	Von Misses Stress (MPa)
1000	5	
2000	6	
3000	7	

2. 300 Nm

Speed, RPM	Angle (Degree)	Von Misses Stress (MPa)
1000	5	
2000	6	
3000	7	

3. 600 Nm

Speed, RPM	Angle (Degree)	Von Misses Stress (MPa)
1000	5	
2000	6	
3000	7	

4. 1000 Nm

Speed, RPM	Angle (Degree)	Von Misses Stress (MPa)
1000	5	
2000	6	
3000	7	

3.9 Result analysis

The collected data will be analyzed since the objective of this thesis is to proof that the load that had been apply to the CVJ will be effect the nature of the CVJ or not. This is the most important part in this thesis because it will show if this thesis success or not.

3.10 Conclusion

The conclusion will be build base on the results of the analysis that was done in CosmosWork software. The recommendation for this simulation test will be done to improve the CVJ result.

CHAPTER 4

RESULT AND DISCUSSION

4.1 Result

The result of analysis is carried out for 1000 rpm, 2000 rpm and 3000 rpm of rotational speed, 100 Nm, 300Nm, 600Nm and 1000Nm of torque and 5^0, 6^0 and 7^0 degree of angle. The analysis is done using the CosmosWork when applied all the parameter in the CVJ.

4.1.1 Result for analysis at 100 Nm (1000 rpm, 2000rpm and 3000 rpm at 5^0, 6^0 and 7^0 of angle)

a) 5 deg

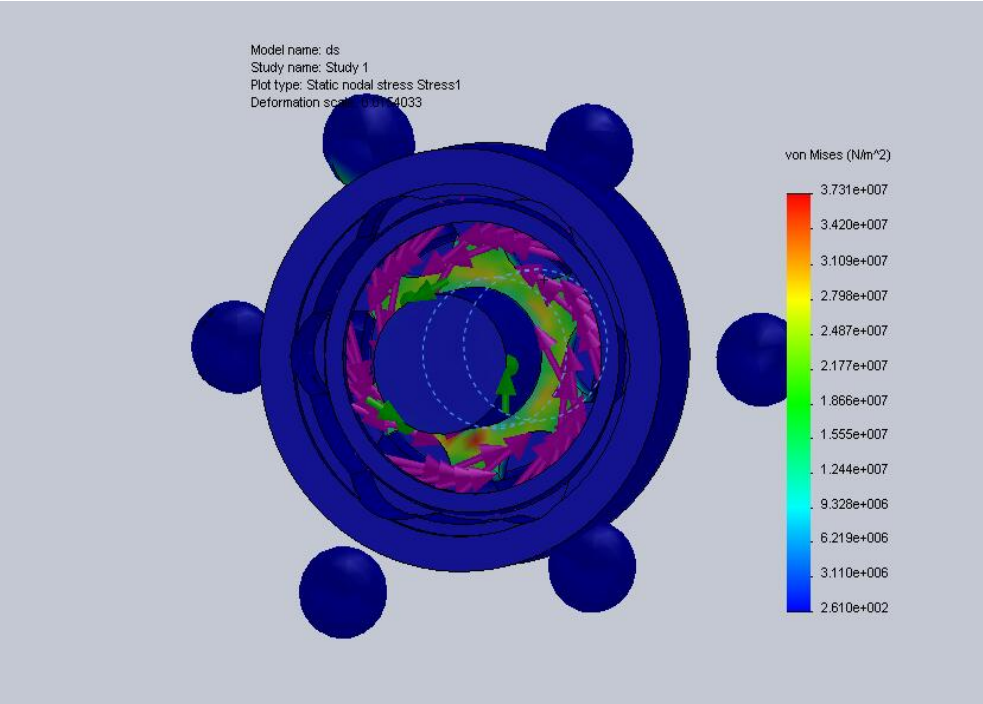

b) 6 deg

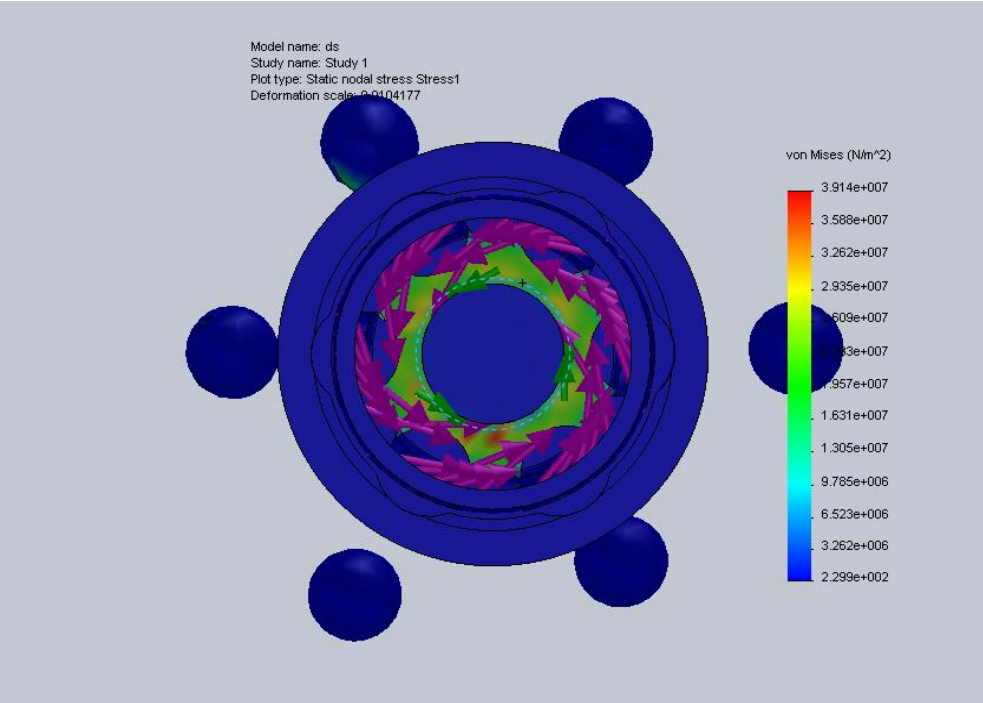

c) 7 deg

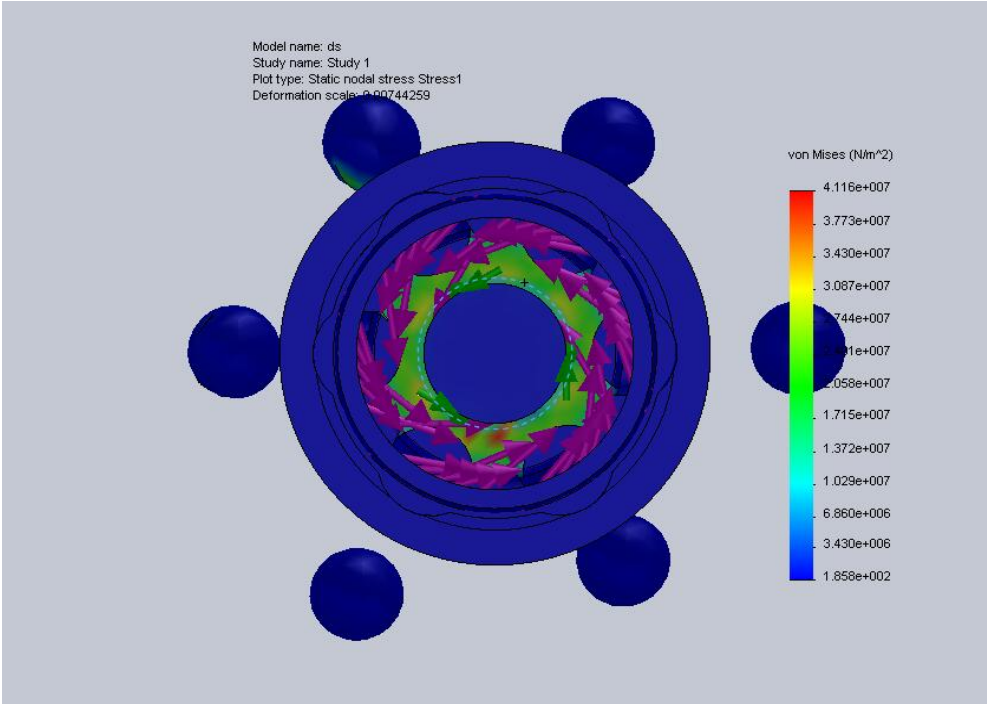

Figure 4.1 Location of maximum stress concentration on red color on inner ball hub when 100Nm torque apply for 1000 rpm, 2000rpm & 3000 rpm at 5^0, 6^0 and 7^0 of angle applied

4.1.2 Result for analysis at 300 Nm (1000 rpm, 2000rpm and 3000 rpm at 5^0, 6^0 and 7^0 of angle)

a) 5 deg

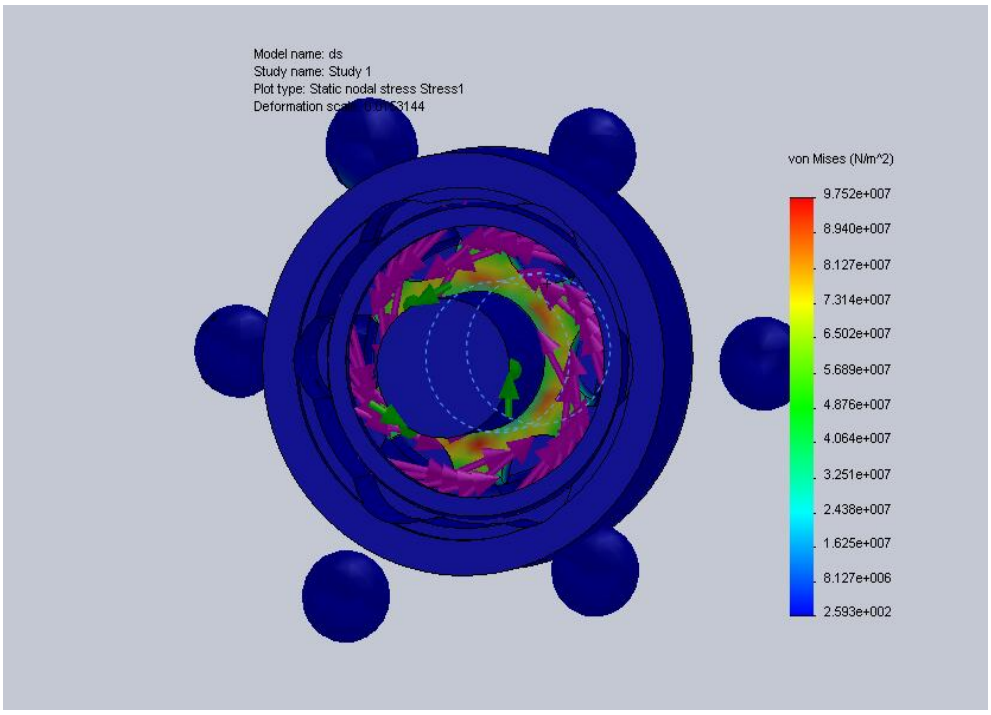

b) 6 deg

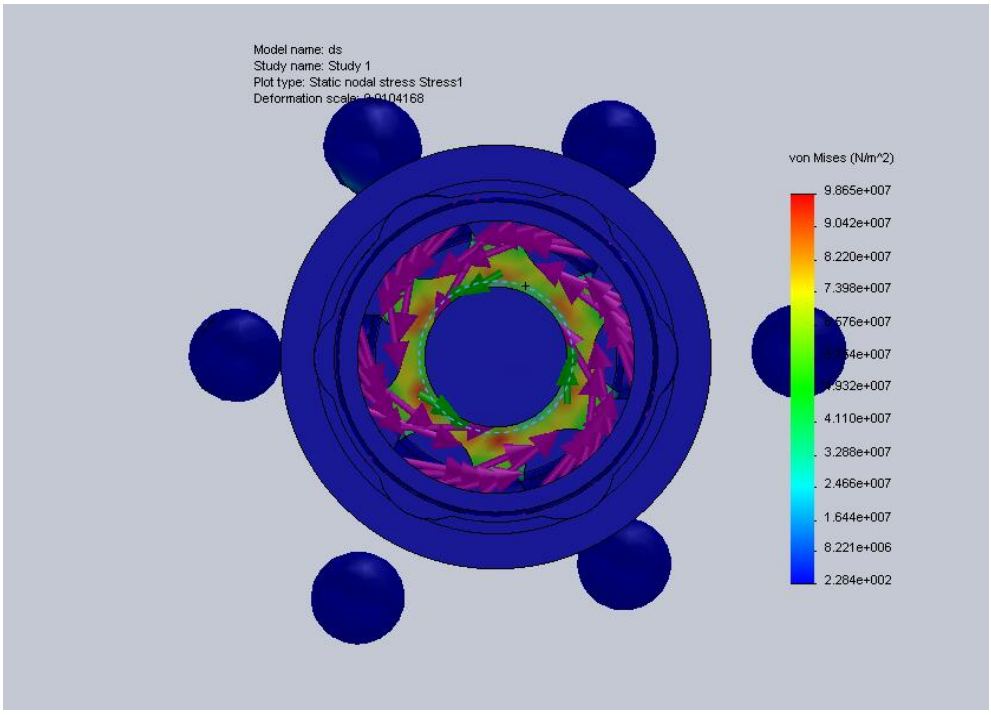

c) 7 deg

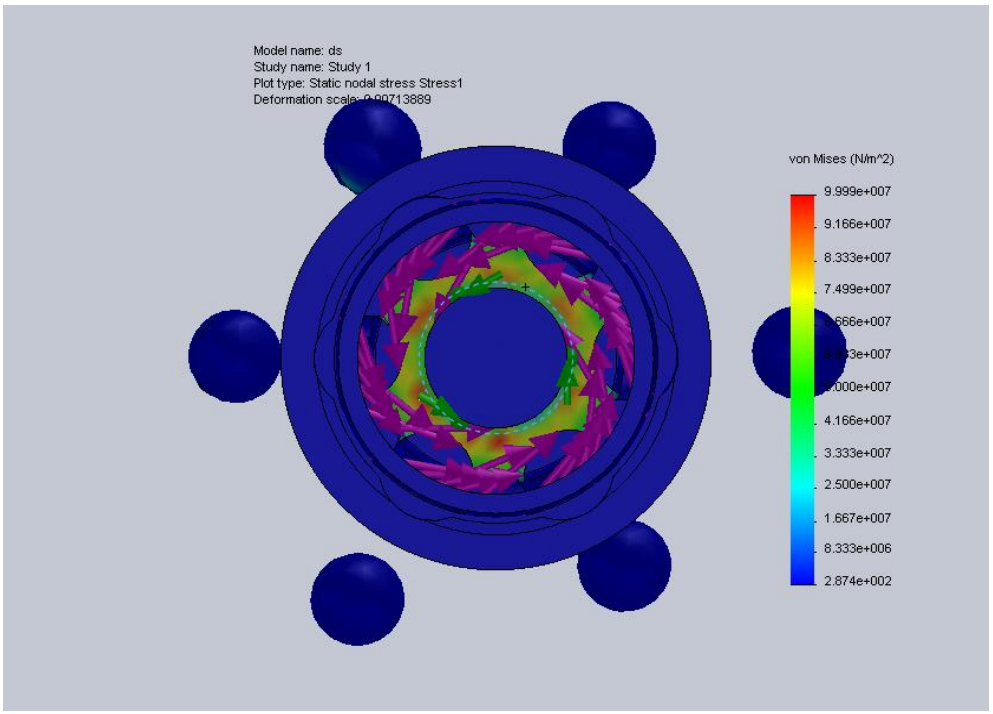

Figure 4.2 Location of maximum stress concentration on red color on inner ball hub when 300Nm torque apply for 1000 rpm, 2000rpm & 3000 rpm at 5^0, 6^0 and 7^0 of angle applied

4.1.3 Result for analysis at 600 Nm (1000 rpm, 2000rpm and 3000 rpm at 5^0, 6^0 and 7^0 of angle)

a) 5 deg

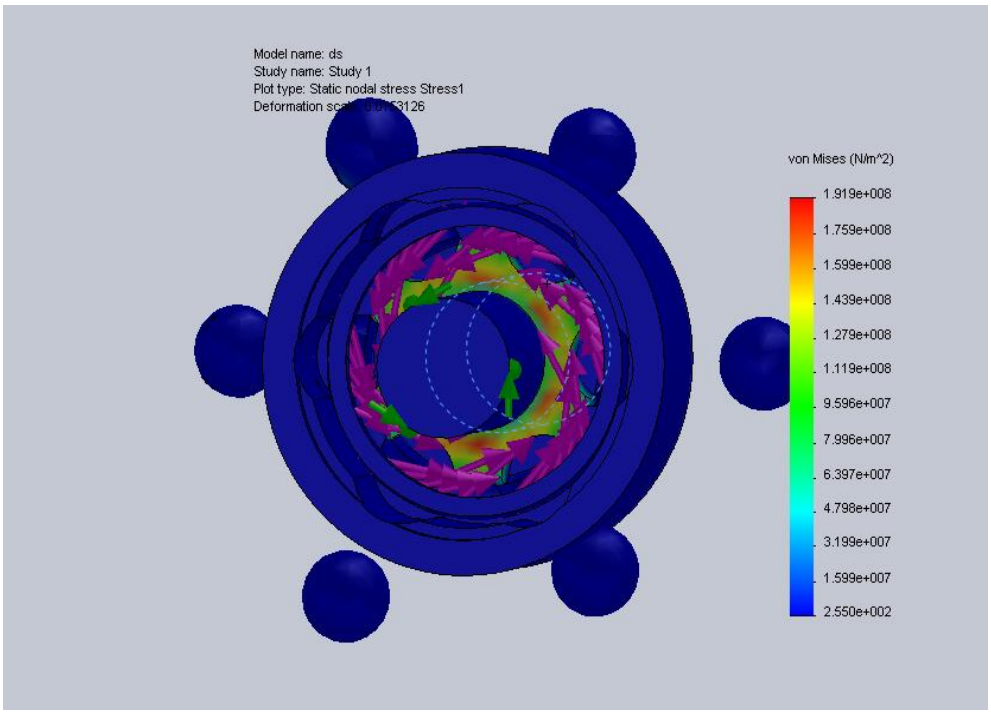

b) 6 deg

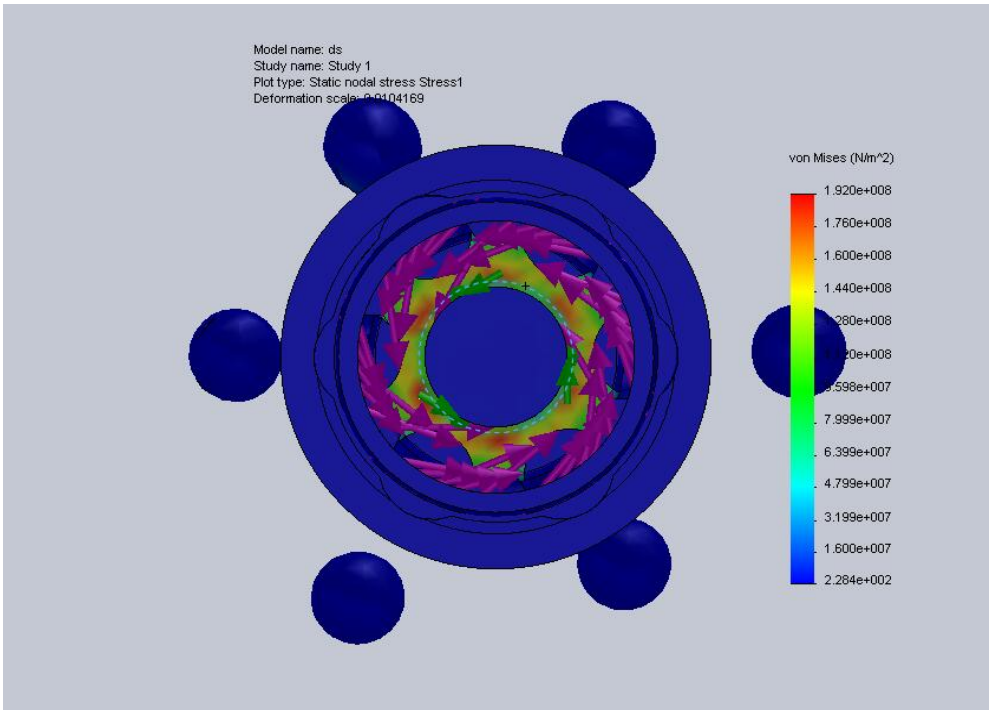

c) 7 deg

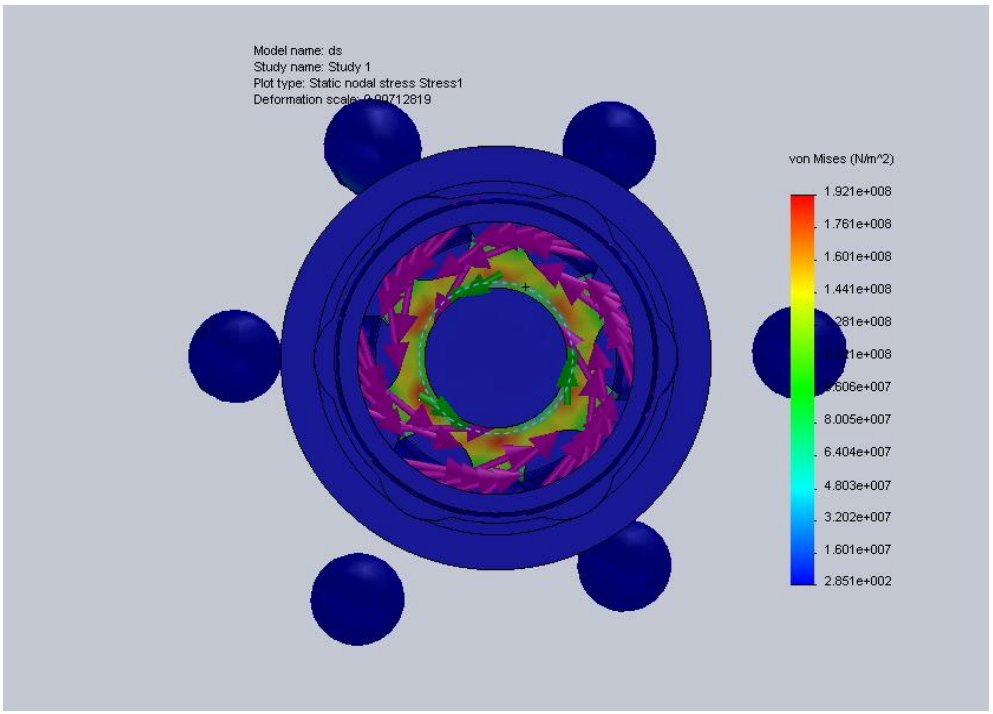

Figure 4.3 Location of maximum stress concentration on red color on inner ball hub when 600Nm torque apply for 1000 rpm, 2000rpm & 3000 rpm at 5^0, 6^0 and 7^0 of angle applied

4.1.4 Result for analysis at 1000 Nm (1000 rpm, 2000rpm and 3000 rpm at 5^0, 6^0 and 7^0 of angle)

a) 5 deg

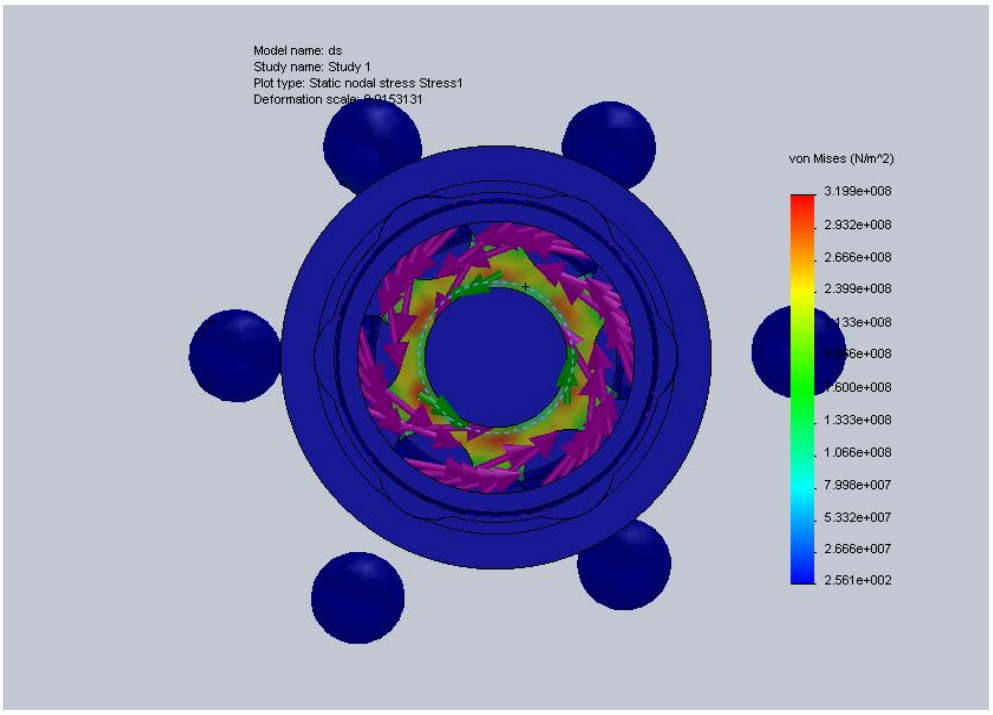

b) 6 deg

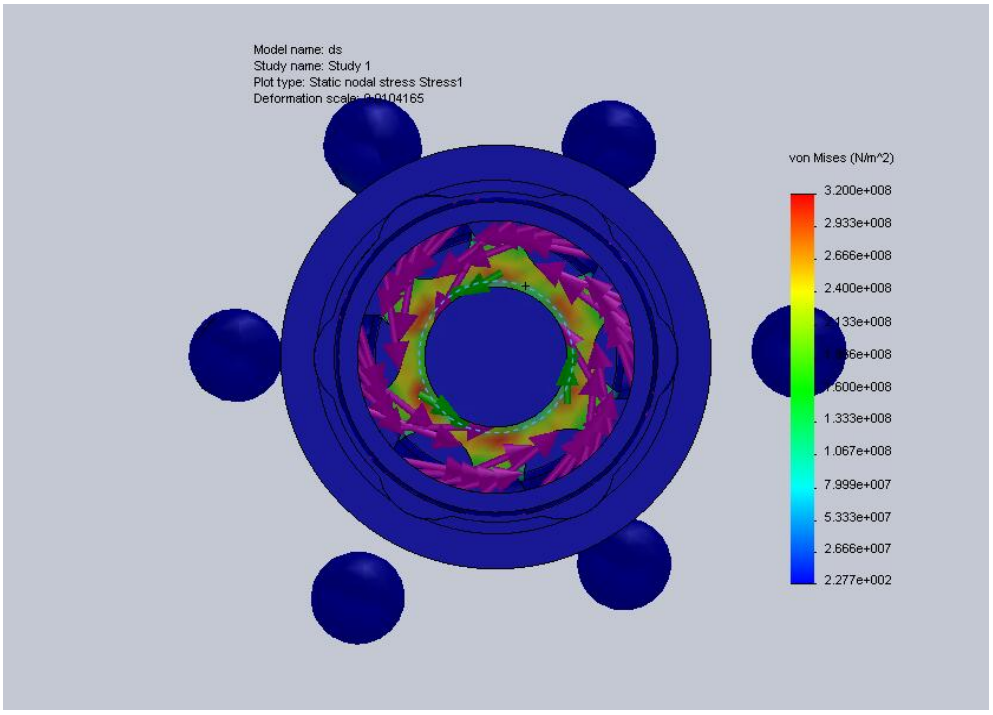

c) 7 deg

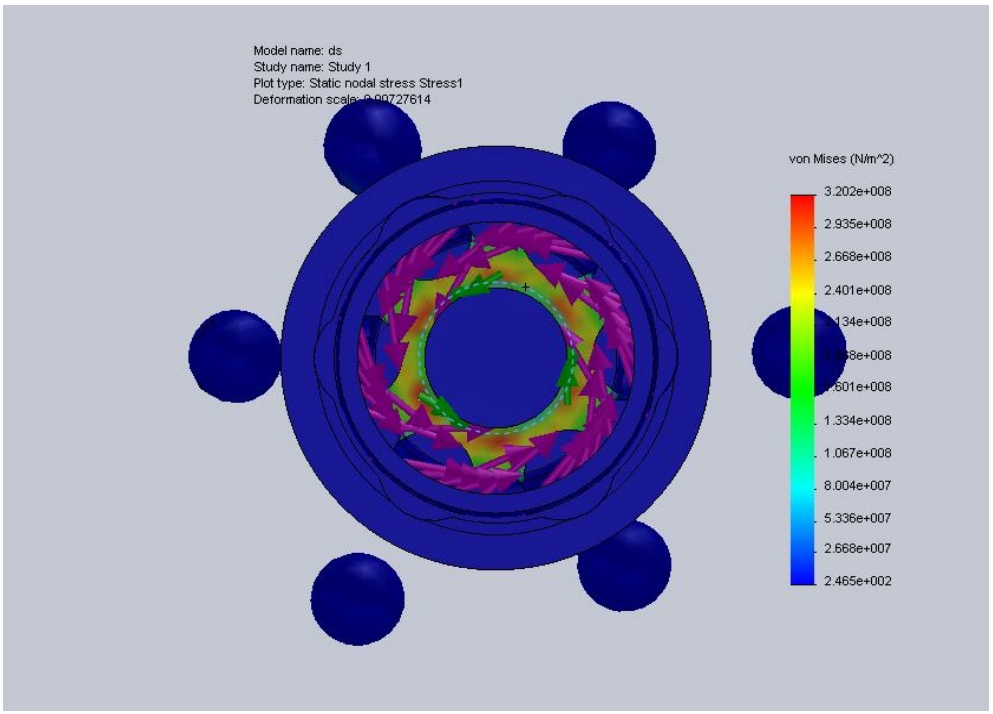

Figure 4.4 Location of maximum stress concentration on red color on inner ball hub when 1000Nm torque apply for 1000 rpm, 2000rpm & 3000 rpm at 5^0, 6^0 and 7^0 of angle applied

4.2 Discussion

The results that obtain from the CosmosWork show the different for every case that have been applied. Every case has been different value of torque, rotational speed and angle off rotation. For this test, it has 4 cases that have been analyze. For case 1, the torque that has apply is 100 Nm, case 2 is 300Nm, case 3 is 600 Nm and case 4 is 1000Nm. For the rotational speed and angle of rotation is same for every case that is 1000 rpm, 2000 rpm and 3000rpm for rotational speed and for angle rotation is 5^0, 6^0 and 7^0.

From the result obtain, the pattern of the result is almost the same. These situations happen because the test that had been done is static analysis not dynamic analysis. The result will be same pattern until it reaches the UTS for that material than it will break/ fail to operation.

4.2.1 Result

Table 4.1: Result for 100 Nm

Speed, RPM	Angle (Degree)	Von Misses Stress (MPa)
1000	5	37.121
2000	6	39.138
3000	7	41.161

Table 4.2: Result for 300 Nm

Speed, RPM	Angle (Degree)	Von Misses Stress (MPa)
1000	5	97.524
2000	6	98.645
3000	7	99.990

Table 4.3: Result for 600 Nm

Speed, RPM	Angle (Degree)	Von Misses Stress (MPa)
1000	5	191.911
2000	6	191.969
3000	7	192.110

Table 4.4: Result for 1000 Nm

Speed, RPM	Angle (Degree)	Von Misses Stress (MPa)
1000	5	319.909
2000	6	319.960
3000	7	320.156

Graph 4.1: Von Mises Stress Vs Torque

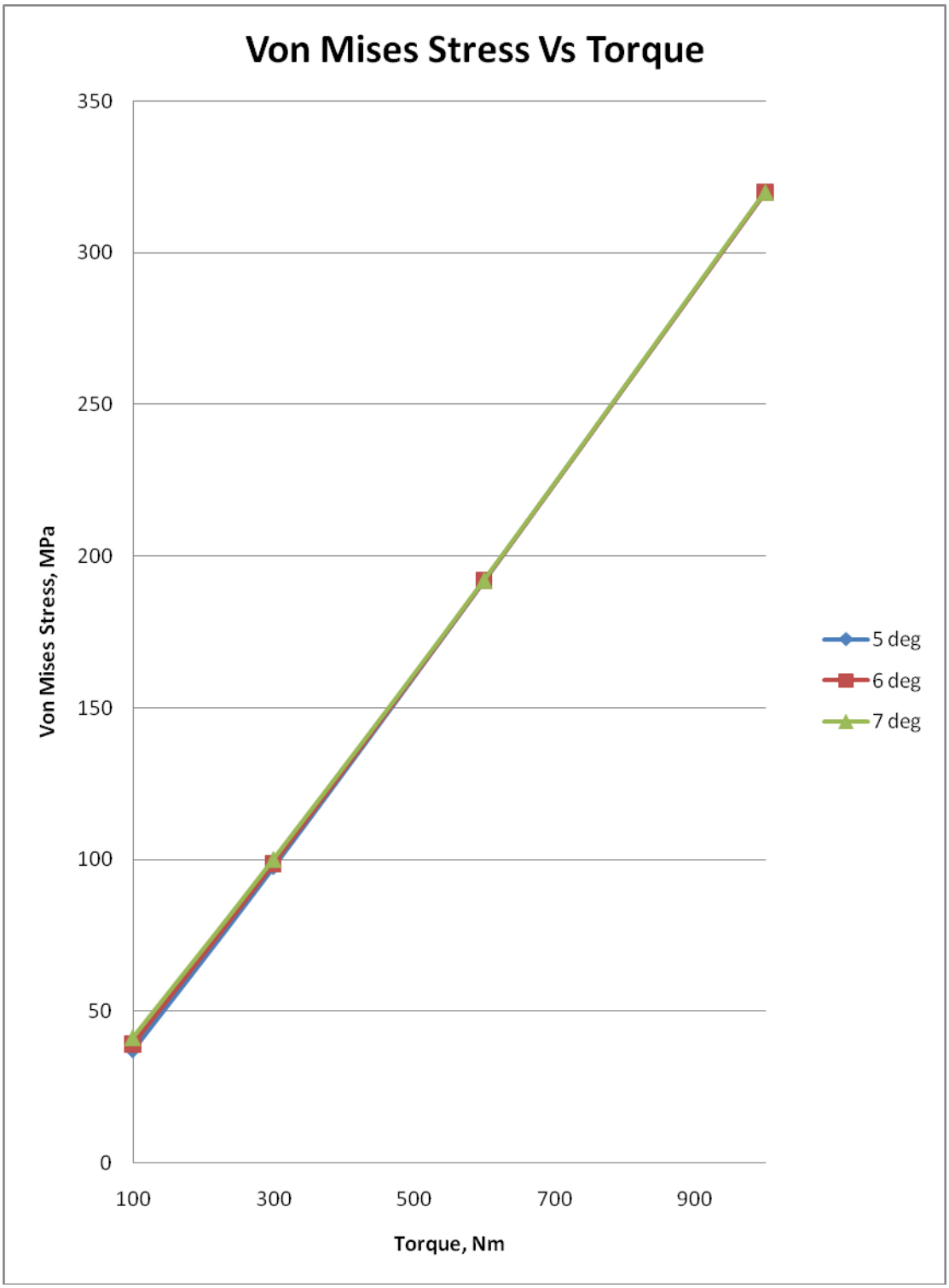

Graph 4.2: Von Mises Stress Vs Rotational Speed

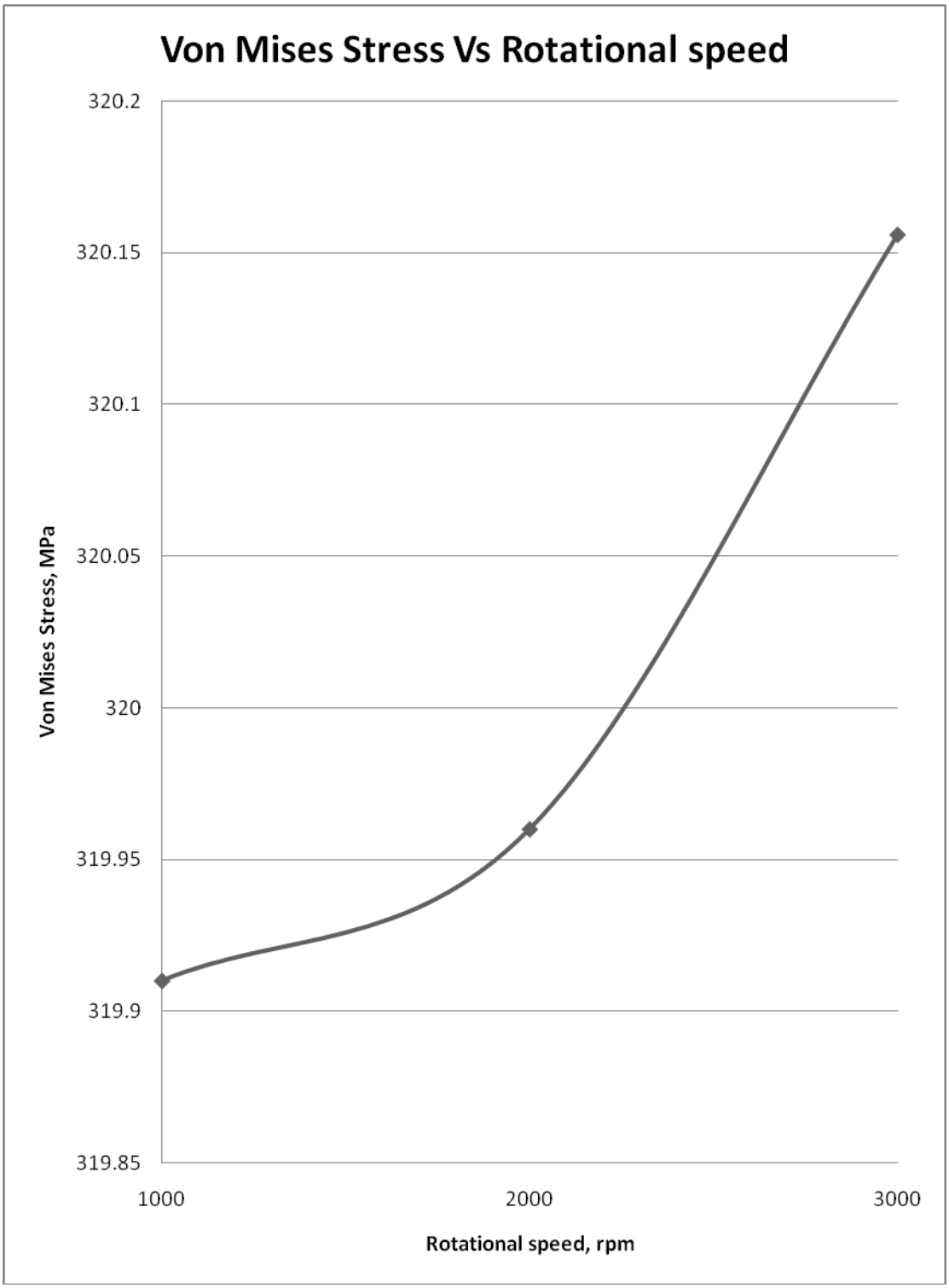

Graph 4.3: Von Mises Stress Vs Angle

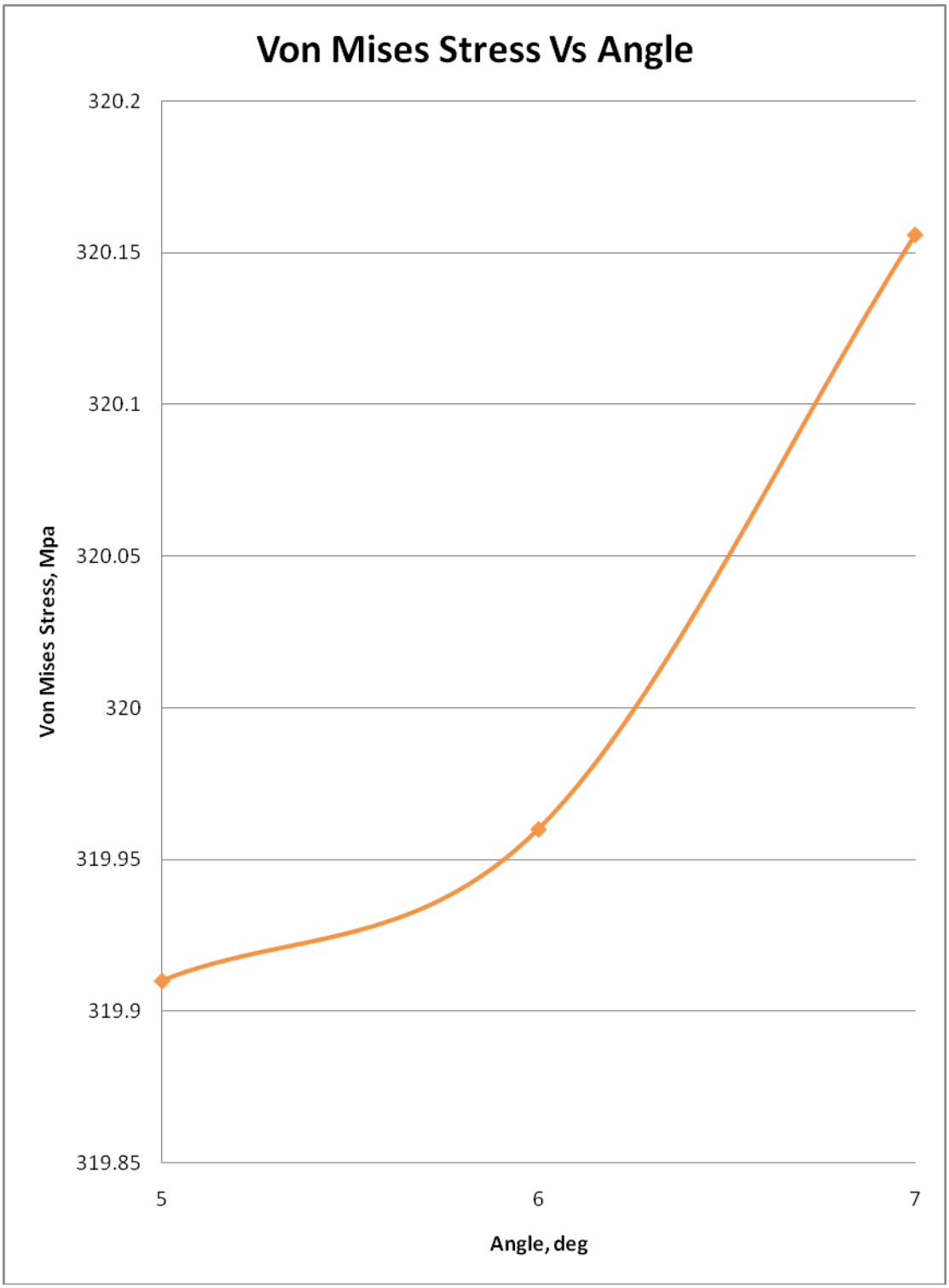

Graph 4.4: Torque & Rotational Speed

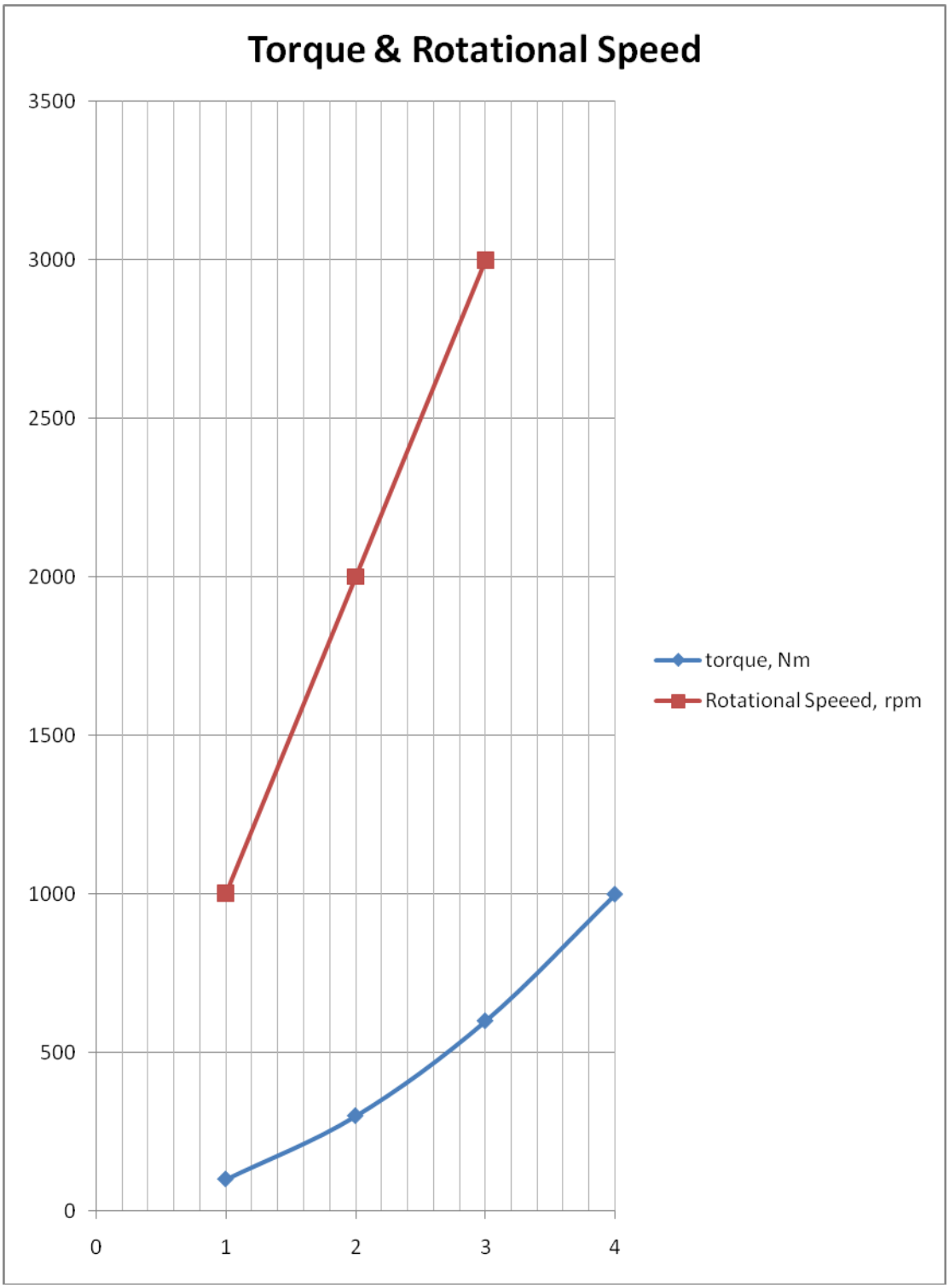

When the torques increases, the Von Mises stress also increase. This situation can be seen in the every graph. This is because it is directly proportional to the stress.

From the graph, the maximum stress occur at every maximum value of rotational speed which is in this simulation is 3000 rpm, maximum angle which is 7 degree and the maximum torque which is 1000 Nm which is the Von Mises stress is 320.165 MPa.

This is because, when the part or component that have rotate or move at high torque, rotational speed and angle , the component will be wear and it will reduce the life of that component.

From the simulation test, when the angle of the rotation is increase, automatically the value of Von Mises stress also will be increase. This is because, when the angle of the rotation is increase, the stress of component or part will increase because at the high value of angle, the possibility of the part to be breaks very higher. As can seen in the graph stress vs angle, the gradient of line between 6^0 to 7^0 is more higher compare to gradient 5^0 to 6^0. From that it proof that at the higher angle the stress also higher because in this part the possibility the part to break or wear is very high.

In this simulation test, torque and rotational speed is directly proportional to each other. This happen because, from the simulation test that have been done, when the rotational speed is increase, the torque is also increase because in generally it true that when the torque increase so the rotational speed also increase and until one stage, this can make the component failure to make the operation. The component will reach this stage when it reach the UTS (ultimate tensile stress) of the material that is when it reach 586 MPa for Cast Stainless Steel and 550 MPa for Steel AISI 1020.

The stress is higher at the inner ball hub because the moments are applied at the shaft, so the maximum stress will occur at the joint that connect the shaft and the CVJ. In the red area is very high stress occurring and at this point also will be the high possibility to wear. For every cases that have been test, the stress occur in the same place that is inner ball hub. For case 1 that is 100 Nm the maximum Von Mises stress is 41.161 MPa, for case 2 that is 300 Nm is applied the maximum Von Mises stress is 99.990 MPa. For case 3 and case 4 which the torque is 600 Nm and 1000 Nm, the maximum Von Mises stress is 192.110 MPa and 320.156MPa.

For every cases that had been simulated, the data from the simulation test have been compare with the actual data that have been taken from the other researcher and latest discussion with the engineer from the industries. The data for the maximum Von Mises stress from other researcher and latest discussion is 307.2 MPa compare with the simulation test is 320.156 MPa. The different between this data is about 4.2%. This happen because the different type of material in term of the properties. Besides that, the different happen because of the software that has been used in simulation test and the researcher, for this simulation test the software that has been used is CosmosWork software but the researcher has used ADAMS software.

For the rotation angle, the different is about 30%. From the other researcher and the latest discussion with the engineer, the rotation angle that the component can reach is 10^0 but during the simulation test, the maximum rotation angle that the component can be reach is only 7^0.

4.2.2 Problem occur during the simulation test

- During the simulation test there have been many problem occur. There are included the design using the SolidWork, the analysis of the component and other.

- Using the SolidWork

    - During the design of the CVJ there have a lot problem occur. Example of the problem is the complexity of the CVJ that need to design. These need the skill to design the CVJ using the SolidWork.

    - Beside that the problem also occurs during the mate section. Mate is use to combine the part or component that have been draw/design to get the actual shape of the part. Mate is very important because the part will be analyzed after it had been mate with each other.

- Using FEA software

    - After design stage is finish, the model will be import from SolidWork to CosmosWork. Firstly the design will be save in IGES file than open in CosmosWork using the same type of file.

    - It is recommended to use ALGOR software in order to get the best result.

    - A few problems encountered during software application as meshing problem and geometry error.

    - The problem is the design cannot be mesh because the part or the component in the CVJ is to complex wish every part needs the different value number of mesh. But the ALGOR only can give one value during mesh for the whole component.

    - After further discussion, it is recommended to use CosmosWork as working software.

- CosmosWork is other one of FAE software that commonly used to analyze the stress, strain and displacement when the load, torque, moment and etc are apply to the component.

CHAPTER 5

CONCLUSION AND RECOMMENDATIONS

5.1 Conclusion

As a conclusion, for the determination of stress concentration, the analysis is done by using CosmosWork software. Static mode is used to approximate locate the maximum stress concentration.

The analysis is carried out in 4 cases where the parameters for each case are different. This analysis is done in 100 Nm, 300 Nm, 600 Nm and 1000 Nm for torque. For rotational speed, 1000 rpm, 2000 rpm and 3000 rpm have been applied. 5^0, 6^0 and 7^0 for angle of rotational that had been applied in CVJ.

Based on the simulation test that have been done in the CVJ, the stress will be occur in the inner ball hub when the moment, rotational speed and angle of rotational are apply in the shaft that connect the ball hub. The stress is maximum at moment 1000 Nm, rotational speed 3000rpm and rotational angle 7^0 that is 320.156 MPa.

The result that have obtain from the simulation test is valid compare to the previous researcher that is the maximum value for the stress is 320.156 MPa compare to previous researcher is 307.2 MPa and the different between this two value is 4.2 %. The different occur because many factor. The main factor why this situation happen because the different value of the material properties that can be a little different when the result obtain. Beside that the different also happen because the load that have been applied in the CVJ not at the accurate place that the previous researcher put

5.2 Recommendations

There are several steps and procedures that could have been taken to improve the result thus, obtaining more accurate and reliable data before the experiment execution. The following steps and procedures are recommended:

1. Use the different software that can be analyzing the stress like ALGOR, ADAMS and other to get the accurate value of stress during the experimental.
2. Beside that to get the actual result of the stress in CVJ, the actual experiment of CVJ needs to be done. Then compare the result from the actual data and the simulation.
3. Make the simulation test using the dynamic test to get the actual and accurate data from the simulation test.

References

[1] A.H. Rzeppa, Universal joint. (13 August 1935) *US Patent 2 010 899* granted .

[2] A. Palmgren, Ball and roller bearing engineering. *SKF Industries Rep.* (1946), pp. 215–223 Philadelphia, PA.

[3] Automotive Engines and Powertrains: Autotech'97/ by automotive devision of the institution of the engineers/ publish by IMechE Seminar publication 1997-6 (page 85, 87)

[4] B.E Wolcher, The qualifications of wear in constant velocity joint components. *M.S. Thesis.* University of Illinois at Urbana-Champaign, 1994, chp 1 6

[5] D.R. Pankolw. The measurement of constant velocity joint wear. M.S. *Thesis,* University of Illinois at Urbana-Champaign, 1993.

[6] F.F. Miller, CV universal ball joints—their application in wheel drives. *SAE Trans. and What's New in Drivelines. Paper 650010 (958A)* (1996), pp. 1–13.

[7] H.H Mabie , Constant velocity joints,., how and why they operate as they do, *Much. Des. (1948)* 10t-105.

[8] K. Tamiyama, S. Kubo and T. Tanignchi. Effect of dimensional factors on the life of Rzeppa universal joint, SAETrans, Section 2, SAE Paper 850 355 (1985)25-35

[9] K. Taniyama, S . Kubo and T. Tanigachi. Effect of dimensional factor on the life of Rzeppa universal joint. *SAETrans.. Section2, SAEPaper* 850 333 (1985) 25-32,

[10] M.L Philpott, B.P Welcher, D.R Pankow and D Vandenberg, A two phase circular regression algorithm for quantifying wear in CV joint ball race tracks. University of Illinois at Urbana-Champaign,*1995*

[11] M.L Philpott, B.P Welcher, D.R Pankow and D Vandenberg, Method and Means for Measuring Wear in Constant Velocity Joints University of Illinois at Urbana-Champaign,*1995*

[12] M. Shiraishi, Y, Tomano and K. Fumuo. A Study of durability of sealing bellows beets for CV joints, *SAE Trans.. Section 2 (1987)* 2608 – 2616

[13] P. Eschmann, L. Hasbargen and J.B. Weigand, Bail and Roller Bearings Theory. Design and Application. In: , Wiley, New York (1985), pp. 342–355.

[14] P. Klevann & J. Park, Double Offset CV Joint Analysis Program Basic On ADAMS, Dana Corporation & Mechanical Dynamic Inc

[15] R. A Serway and J.W. Jr Jewett (2003). *Physics for Scientists and Engineers*. 6th Ed. Brooks Cole. ISBN 0-53440-842-7.

[16] T.Birch, C.Rockwood, Manual Drivetrains and Axles (fourth edition), Pearson Prentice Hill

[17] Tipler, Paul (2004). *Physics for Scientists and Engineers: Mechanics, Oscillations and Waves, Thermodynamics (5th ed.)*. W. H. Freeman. ISBN 0-7167-0809-4.

Appendix A

Material Properties

Material	**Properties**
AISI 1020	Yield Strength (YS) **550 MPa** Ultimate Tensile Strength (UTS) **630 MPa**
Cast Stainless Steel	Yield Strength (YS) **241 MPa** Ultimate Tensile Strength (UTS) **586 MPa**

Appendix B

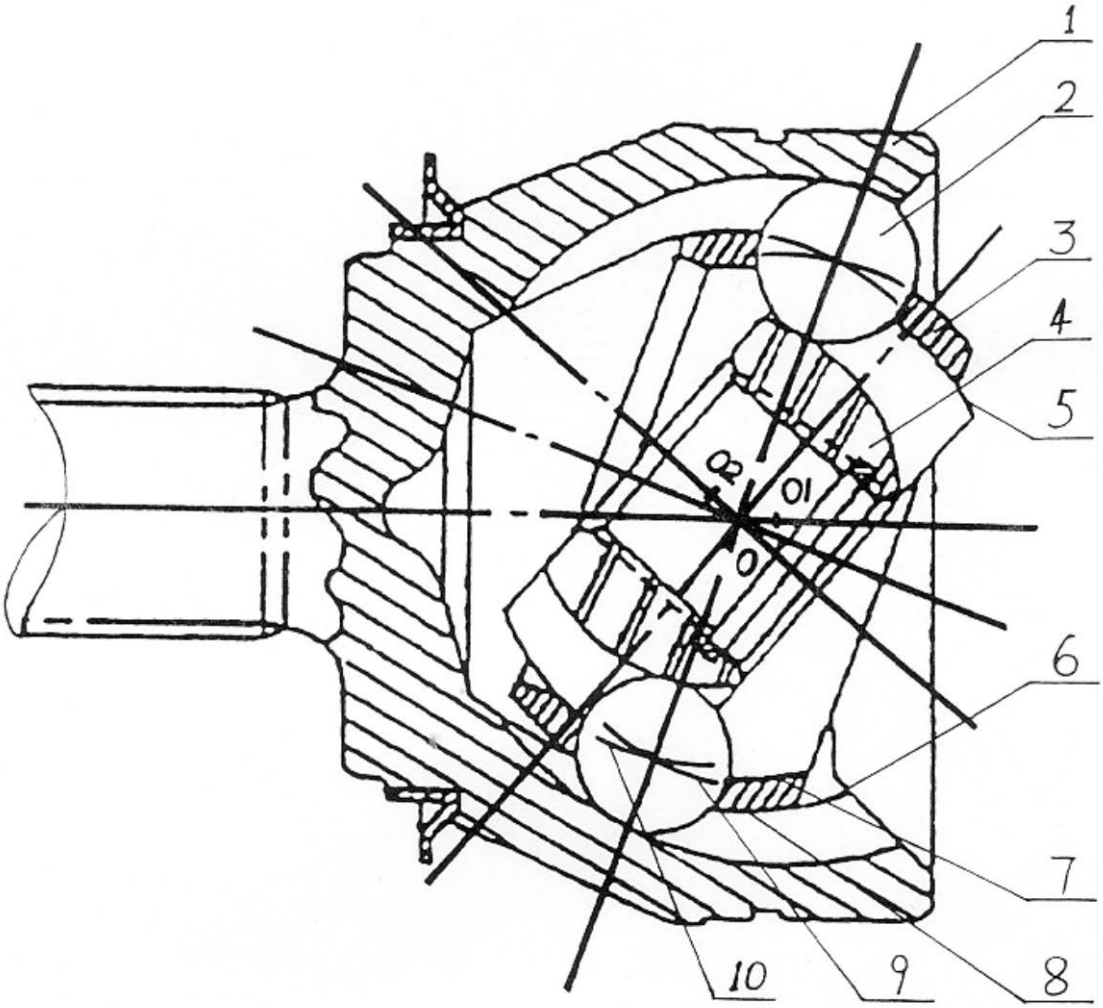

1 Outer Race
2 Ball
3 Cage
4 Inner Race
5 I.R. Sphere
6 O.R. Sphere
7 Cage ID Sphere
8 Cage OD Sphere
9 Ball Ctr. Trace in O.R. Groove
10 Ball Ctr. Trace in I.R. Groove

Figure A – 1: Rzeppa Joint

Appendix C

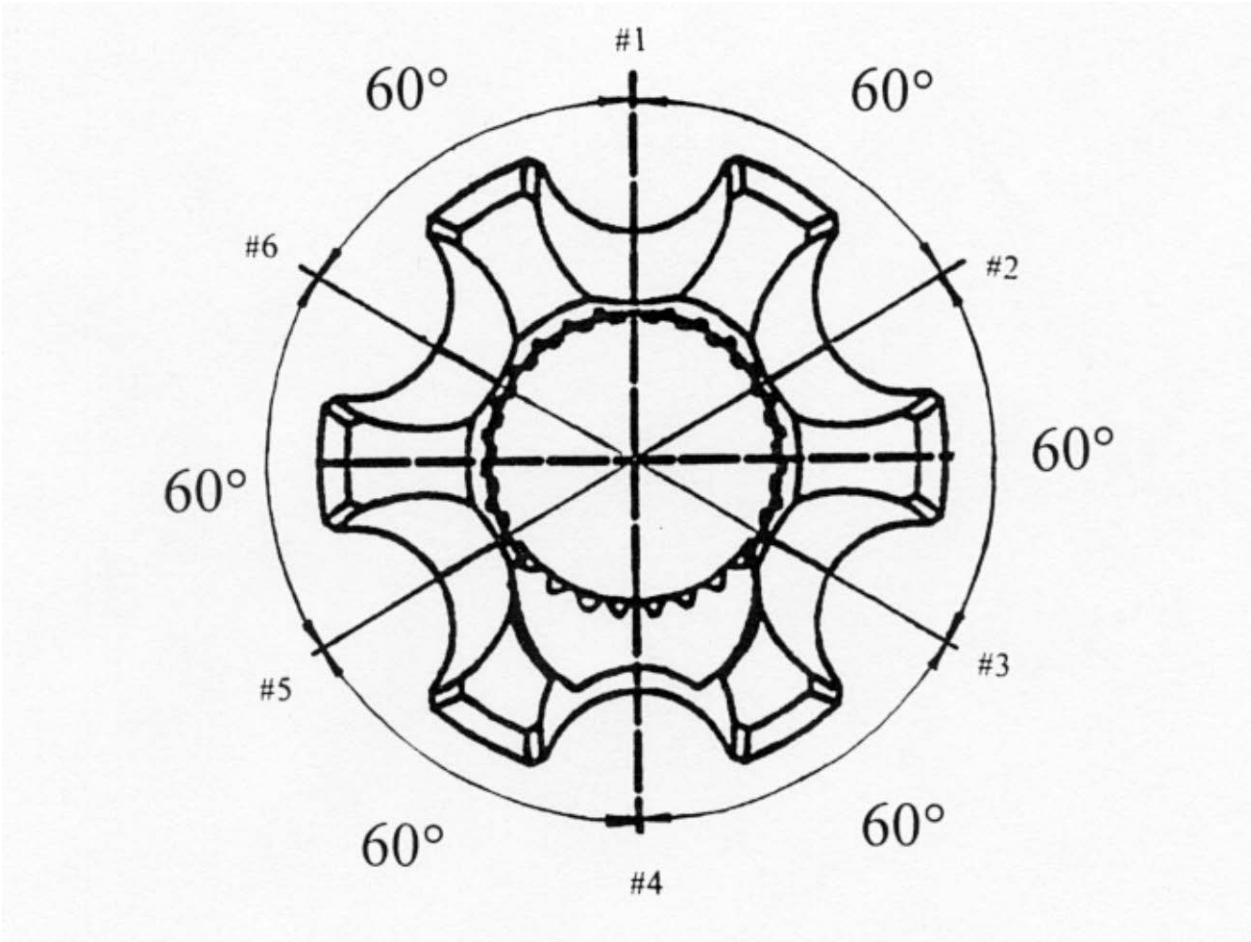

Figure A – 2: The Ideal spacing

Appendix D

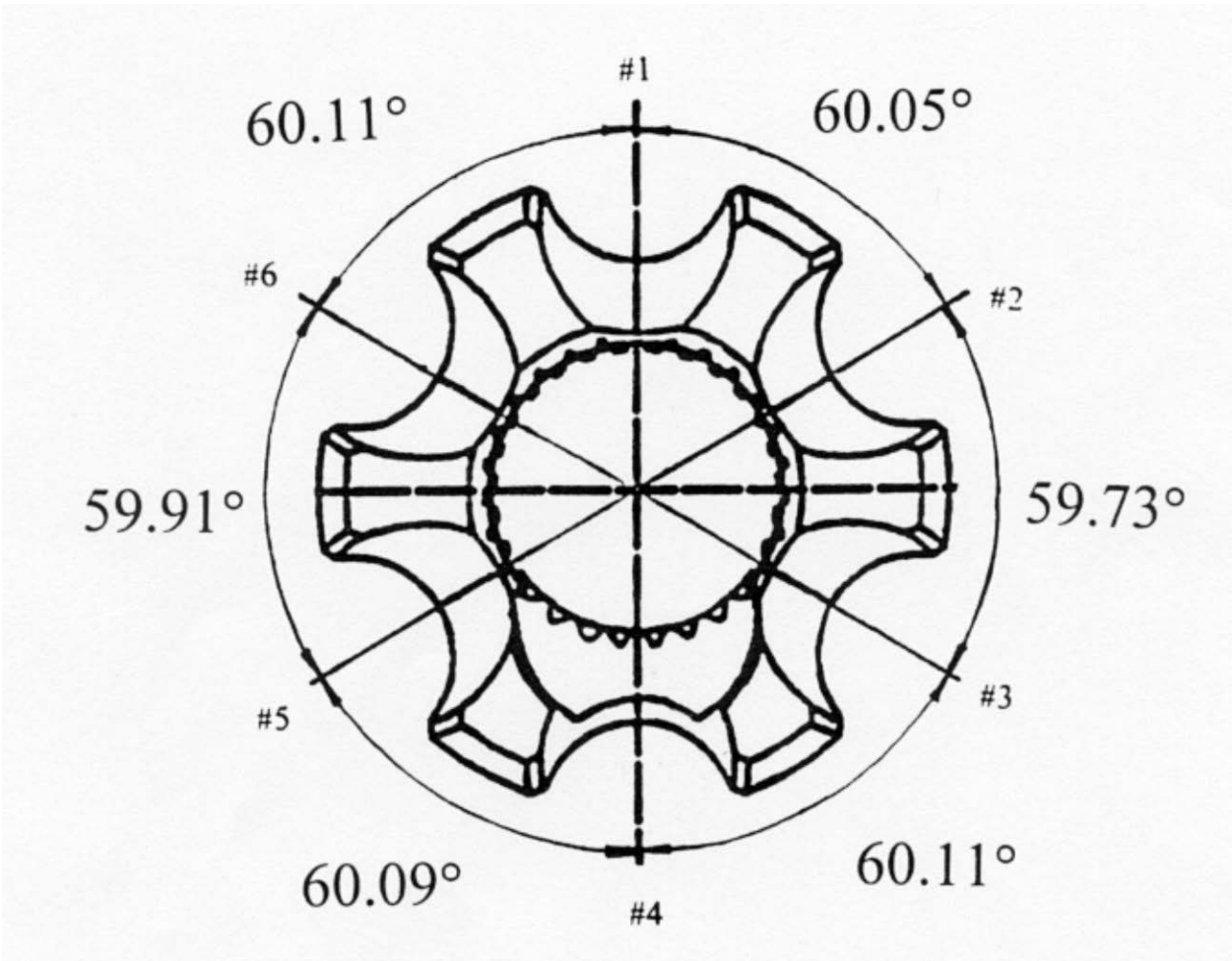

Figure A – 3: The inspected spacing