UNIVERSITI MALAYSIA PAHANG

BORANG PENGESAHAN STATUS TESIS

JUDUL: DESIGN AND FABRICATE ANTITHEFT LOCK FOR MOTORCYCLE

SESI PENGAJIAN: 2007/2008

Saya, **WAN MOHD HAZWAN BIN WAN ARIFF (880312-11-5199)**
(HURUF BESAR)

mengaku membenarkan tesis Projek Tahun Akhir ini disimpan di perpustakaan dengan syarat-syarat kegunaan seperti berikut:

1. Tesis ini adalah hakmilik Universiti Malaysia Pahang (UMP).
2. Perpustakaan dibenarkan membuat salinan untuk tujuan pengajian sahaja.
3. Perpustakaan dibenarkan membuat salinan tesis ini sebagai bahan pertukaran antara institusi pengajian tinggi.
4. **Sila tandakan (√)

[ ]	**SULIT**	(Mengandungi maklumat yang berdarjah keselamatan atau kepentingan Malaysia seperti yang termaktub di dalam AKTA RAHSIA RASMI 1972)
[ ]	**TERHAD**	(Mengandungi maklumat TERHAD yang telah ditentukan oleh organisasi / badan di mana penyelidikan dijalankan)
[√]	**TIDAK TERHAD**	

Disahkan oleh:

_____
(TANDATANGAN PENULIS)

_____
(TANDATANGAN PENYELIA)

Alamat Tetap:
778-I, Kg Losong Bukit Tangki Air,
Losong,
21000 Kuala Terengganu
Terengganu Darul Iman

MOHAMMAD KHALID BIN WAHID
(Nama Penyelia)

Tarikh:

Tarikh:

CATATAN: * Potong yang tidak berkenaan.

** Jika tesis ini SULIT atau TERHAD, sila lampirkan surat daripada pihak berkuasa/organisasi berkenaan dengan menyatakan sekali tempoh tesis ini perlu dikelaskan sebagai SULIT atau TERHAD.

◆ Tesis dimaksudkan sebagai tesis bagi Diploma secara penyelidikan atau disertai bagi pengajian secara kerja kursus.

DESIGN AND FABRICATE ANTHEFT LOCK FOR MOTORCYCLE

WAN MOHD HAZWAN BIN WAN ARIFF

A project report submitted in partial fulfillment of the requirements
for the award of the
Diploma of Mechanical Engineering

Faculty of Mechanical Engineering
UNIVERSITI MALAYSIA PAHANG

NOVEMBER 2008

SUPERVISOR'S DECLARATION

I hereby declare that I have read this thesis and in my opinion this thesis is sufficient in terms of scope and quality for the award of the diploma of Mechanical Engineering.

Signature : …….

Name of Supervisor : MOHAMMAD KHALID BIN WAHID

Date :

STUDENT'S DECLARATION

I declare that this thesis entitled "Design and Fabricate Antitheft lock for motorcycle" is the best result of my own research except as cited in the references. The thesis has not been accepted for any Diploma and is not concurrently submitted in candidature of any other diploma.

Signature : ……..

Name : WAN MOHD HAZWAN BIN WAN ARIFF

Date :

To my beloved parent and friends

ACKNOWLEDGEMENTS

First of all I would like to thank and express my fully gratitude to Allah SWT for giving me the chance to complete my final year project in this semester (2008). During this project, there were many obstacles starting from the beginning until the end with helps from Allah I can finish all successfully. To my previous supervisor, Mr. Mohammad Khalid bin Wahid, thanks for giving me this task and the challenging project. I was learning so many things from you to settle down the entire problem that was have from starting until the end. To all lectures, JPs and PJPs thank for your help whenever I am lost. Dear all my friend from DMM, your comment and your idea that was given to me, I was so appreciated because from you all, that is given to me good benefit and helps me. Special thanks to both my family starting from my mother, my brother and sister for their support and pray to ensure my successful. Thank you so much for each of you all. I appreciate your helps and support and may Allah bless you all.

ABSTRACT

Using from the stolen motorcycle problem because did not have more lock security for motorcycle that's really give high protection, a high protection security lock for motorcycle was design and build up. For make sure this product really high protection security antitheft lock, this product was developed after research another lock at the market. This product has two system of lock. First is for the rod as a main lock for this product. This rod will be lock at rim tire to make sure it cannot move. Second is steel cable wire. This cable is a flexible lock system that can lock at anywhere example at another motorcycle or at mast. To make sure this product really strength, welding joint use it to joint each part. This product actually can make another alternative for customer motorcycle to protect their motorcycle from theft. This product actually obtains the objective although it not easy to bring anywhere.

ABSTRAK

Melihat masalah kes kecurian motosikal yang semakin membimbangkan kerana kurangnya kunci yang benar-benar memberikan perlindungan kepada motosikal daripada dicuri, sebuah kunci motosikal yang mampu memberikan perlindungan dengan lebih tinggi dan diyakini telah direka dan dicipta. Untuk memastikan motosikal benar-benar selamat, kunci ini telah diubahsuai daripada kunci motosikal yang sedia ada di pasaran hasil penelitian dan kajian. Kunci ini mempunyai dua kali perlindungan daripada kunci motosikal biasa iaitu dengan diletakkan dua perlindungan kunci. Pertama ialah batang rod yang merupakan kunci utama pada produk ini. Rod ini berfungsi memegang dan mengunci rim tayar daripada bergerak. Kemudian diketakkan pula kunci kedua iaitu kabel besi. Kabel besi ini merupakan kunci kedua dan ia berfungsi secara fleksibel. Maksudnya, kabel ini bole dikuncikan dimana-mana tempat yang diingini seperti pada motosikal lain, dan pada tiang. Dengan menggunakan sambungan kimpalan, ia merupakan kunci yang kukuh dan sukar untuk dibuka atau dirosakkan. Secara keseluruhan projek, produk ini mampu memberikan harapan baru kepada pengguna motosikal daripada ancaman pencuri. Projek ini berjaya mencapai objektifnya walaupun ia agak sukar dibawa kemana-mana.

TABLE OF CONTENTS

LIST OF FIGURES

LIST OF TABLES

Chapter 1

INTRODUCTION

1.1 Project background

My project title is Design and fabricates antitheft lock for motorcycle. As the Diploma final year project allocates the duration of 1 semester, this is large main-hour project therefore requires significant number of students to participate.

These projects are supervised by Mr. Mohammad Khalid bin Wahid who give me an advice when problem to occur and about planning of project. The project actually focus on how prevention in motorcycle theft problem. I have 14 weeks to make sure this project was done and after that, it must be tested at motorcycle in order work properly. This project is begin and start with investigation make duration in research literature review via internet, my supervisor, discussion with other friend and other relevant material that related for this project.

Statistic about stolen motorcycle problem in Malaysia was in under control. For example at Perak article from Utusan online date 25 August 2008, statistic motorcycle stolen case was recoding 37 % for 7 month this year. From January until July 2008, 2,648 cases were recoded but in other hand, 2,632 cases were recoded in statistic criminal journey at same time last year. For this example like Perak only, that it can be assumed at another state the stolen motorcycle case is have high statistic case.

That's why my project is to produce an idea on how to solve this problem. Antitheft lock is must be in a high performance and in a high security to make guaranties to people or customer that their motorcycle was not easy to be stolen.

1.2 Project objectives

The objective of my project as bellow:

i) To design and fabricate the new concept of antitheft lock for motorcycle which can give more security.
ii) To make sure this product must be user friendly and portable.

1.3 Project scope

There is several scope of my project:

i) Design the antitheft lock using with sketch and draw by using Solidwork software.
ii) Fabricated and assembled the parts.
iii) Choose the suitable material
iv) Can use any types of motorcycle

1.4 Problem statement

There are several problems why I must design this lock:

i) Difficult to find the best lock motorcycle at market that have high security.
ii) Lock product at the market are not effectiveness.

1.5 Gant Chart

PROJECT ACTIVITIES	W 1	W 2	W 3	W 4	W 5	W 6	W 7	W 8	W 9	W10	W11	W12	W13	W14	W15
Discuss and get the title of project															
Find the information															
Make idea and sketching															
Build in solid work software															
Preparation for mid semester presentation PTA															
Start fabricate the component															
Make the report															
Submit the thesis															

Figure 1.5: Gant Chart

Chapter 2

LITERATURE REVIEW

2.1 Introduction

For this chapter, generally main article or information is about how to joint each part with welding process and what is the procedure or information to be selected material for this project. That's because, main point to make sure this project succeed is about how to joint each part and the selected material that can be this product in a good hardness and good strength.

First method will be used is about welding. Welding is an efficient, dependable, flexible, and economical means of fabrication. Welding is widely used in industry as a principal means of fabricating and repairing metal product. Welding can lower production cost by simplifying design and eliminating costly patterns and machining operations. Welding can also be used in repair operations and adding new metal to worn parts.

Welding is the coalescence or joining together of metal, with or without a filler metal, using heat, and/or pressure. Bonding of metals during welding occurs through localized melting or micro structural changes at the interface between the metals. Welding is used throughout industry in building construction, aircraft manufacturing, and for automobile production.

Second method must be review and study is about the suitable material. As a product for security, the hardness and strength material must be consider in a high

performance. That is a main structure for this product to give answer at the end that it is high security or not.

2.2 History of Lock

Securing one's property has long been a concern of people throughout the world. Beyond hiding the objects or constantly guarding them the most frequently used option is to secure them with a device. Early solutions included knots to either detect, like the Thief knot, or hamper, like the Gordian knot. Locks may be entirely mechanical, or electromechanical. They may be operated by turning some form of removable key, by keying or dialing in a combination which directly or via electromechanical means operates the lock, with some form of magnetic or other card reader, or by moving a part on a safety lock intended to prevent accidental operation rather than to prevent unauthorized access.

Began this modern year, lock more effectiveness to protection some asset from theft to be stolen. For motorcycle, the stolen problem always given people fear and shirk. The engineer always improvement the lock of motorcycle every year to settle down this problem. From the basic lock until the modern lock, the motorcycle stolen problem never settles until now.

Figure 2.2(a): example motorcycle lock

The lock usually uses the high and hardness material. This is because for the good material, it will be some advantages to the lock. For example it will not be easy to be cut or something uses it to break the lock.

Figure 2.2(b): lock

After select the good material, the lock must be joined each part or component using some method. Always to get the good joint, weld method use it because weld process is the best joint method to give high hardness and high strength to the product.

2.3 History of weld

Modern welding process evolved from discoveries and inventions dating back to the year 2000 B.C. when forge welding was first used as a means of joining metal by heating and hammering until the objects where fused together. Today, forge welding is used only limited application.

Acetylene gas was discovered in 1836 by Edmund Davy. When combined with oxygen, acetylene produced a flame suitable for welding and cutting. The application of heat generated from electric arc between carbon electrodes was the basis for the arc welding process. Resistance welding, which also uses electricity, was also developed in the late 1800s and first used in the early 1900s.

One of the most significant developments at the time was the invention of an electrode that is consumed into the weld while providing heat from an arc (the shield metal arc welding process). Modification to the coating applied on the consumable electrode allowed greater applications for arc welding.

Another improvement in the arc welding process was the addition of an inert shielding gas to protect the weld area from atmospheric contamination (the gas tungsten arc welding process). This proved to be an especially important process in welding

magnesium and aluminum on World War II fighter planes. The electrode used was made out of tungsten and was not consumed into the weld. Originally, helium was used as a shielding gas, but was later replaced by the less expensive argon.

New developments in the field continue to address new requirements and applications in industry. Current welding processes are the product of continued refinements and variations of the welding processes discovered in the 1800s.

2.3.1 Welding Processes

The demands of a growing industrial economy during the 1800s spurred the development of modern welding processes. The welding process to be used for a particular job is determined by the following:

- Type of metals to be joined
- Cost involved
- Nature of products to be fabricated
- Production techniques used
- Job location
- Material appearance
- Equipment availability
- Welder experience

Welding processes used today are commonly classified as oxyfuel welding, arc welding, and resistance welding.

2.3.2 *Oxyfuel welding*

Oxyfuel welding (OFW) is a group of welding processes that use heat from the combustion of a mixture of oxygen and fuel for welding. Acetylene, methylacetylene-propadiene stabilized (MAPP) gas, propane, natural gas, hydrogen, or propylene may be used. The heat is obtained from the combustion of a combustible gas and oxygen.
OFW welding processes are used with or without filler metal. If filler is not used in the joint, the weld is autogenous. An autogenous weld is a fusion weld made without filler metal.

Oxyacetylene welding is the most commonly used oxyfuel process. Oxyacetylene welding (OAW) is an oxyfuel welding process that uses acetylene as the fuel gas. Because of its flexibility and mobility, oxyacetylene welding is used in all metalworking industries, but is most commonly used for maintenance and repair work.

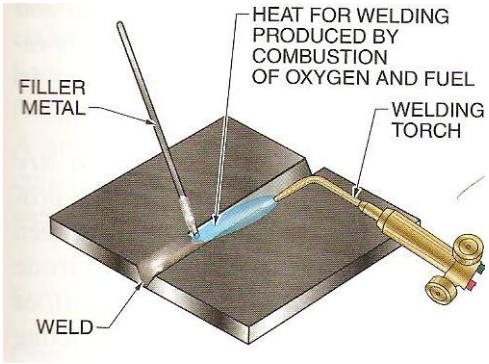

Figure 2.3.2: Oxyfuel Welding (OFW)

2.3.3 *Arc Welding*

Arc Welding (AW) is a group of welding processes that produce coalescence of metals by heating them with an electric arc. The arc is struck between a welding electrode and the base metal. The welding electrode is a component of the welding circuit that

terminates at the arc. The joint area is shielded from the atmosphere until it is cool enough to prevent the absorption of harmful impurities from the atmosphere.

AW is the most common method of welding metals. AW processes included metal arc welding (SMAW), gas tungsten arc welding (GTAW), gas metal arc welding (GMAW), flux cored arc welding (FCAW), submerged arc welding (SAW), and plasma arc welding (PAW).

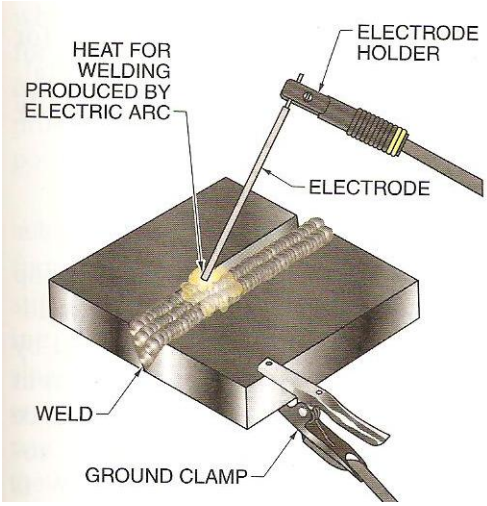

Figure 2.3.3: Arc Welding (AW)

2.3.4 *Shielded Metal Arc welding*

Shielded metal arc welding (SMAW) is an arc welding process in which the arc as shielded by the decomposition of the electrode coating. The electrode is consumed into the weld while providing heat from an electric arc. Variations in composition of the electrode coating allow different applications of the SMAW process.

Common applications of SMAW are in the fabrication of machinery and structural steel for buildings and bridges. SMAW is considered ideal for making storage and pressure vessels as well for production-line products using standard commercial metals. SMAW is also used in repair work and in welding large structures.

2.3.5 *Gas Tungsten Arc Welding*

Gas tungsten arc welding (GTAW) is an arc welding process in which a shielding gas protects the arc between a nonconsumable (does not become part of the weld) tungsten electrode and the weld area. GTAW uses a nonconsumable tungsten electrode and a shielding gas, usually helium or argon, for welding. The GTAW process can be used to weld using filler metal, or without filler metal to form an autogenous weld. GTAW is widely used for joining thin-wall tubing and depositing the root pas in pipe joints. GTAW produces a very high-quality weldment.

2.3.6 *Gas Metal Arc Welding*

Gas metal arc welding (GMAW) is an arc welding process that uses an arc between a continuous wire electrode and the weld pool. Argon is used as a shielding gas for non-ferrous metals such as aluminum, and carbon dioxide/carbon dioxide mixtures with argon are used as a shielding gas for steels. The GMAW process uses a continuously fed consumable wire, eliminating the need to stop and change electrodes. This has increased the popularity of GMAW in manufacturing

2.4 Joint design and welding terms

2.4.1 Welding Terminology

Before proceeding with any welding operation, welders must understand common welding terms. The base metal is the metal or alloy that is to be welded. An electrode is a component of the welding circuit that conducts electrical current to the weld area. Electrodes may be consumable or nonconsumable, depending on the welding process. Some electrodes, such as those used in shielded metal arc welding, are covered with a flux coating.

A weld bead is that results from a weld pass. A weld is a single progression of welding along a weld joint. A single pass weld requires only one weld pass. When laying a bead in a multiple-pass weld, each weld pass builds on the previous pass. The movement of the heat source creates ripples as the weld bead is deposited. A ripple is the shape within the deposited bead caused by the movement of the welding heat source. A crater is a depression in the base metal that is made by the welding heat source at the termination of the weld bead. Joint penetration measurement does not include the weld reinforcement measurement. Weld reinforcement is the amount of weld metal in excess of that required to fill the joint. Root reinforcement is reinforcement on the side opposite the one on which welding took place. Face reinforcement is reinforcement on the same side as the welding.

The root face is the portion of the groove face within the joint root. The root opening is the distance between joint members at the root of the weld before welding. The root opening must be accurate so that excess welding is not necessary. Weld width is the distance from toe to toe across the face of the weld. The weld toe is the point where the weld meets the intersection of the base metal and the weld face. The toes are the points where the base metal and weld metal meet. The weld face is the exposed surface of the weld, bounded by the weld toes on the side on which welding was done. The face

may be either concave or convex. The weld root is the area where filler metal intersects the base metal and extends the furthest into the weld joint.

The actual throat is the shortest distance from the face of a fillet weld to the weld root after welding. The effective throat is the minimum distance, minus convexity, between the weld face and the weld root. A weld leg is the distance from the joint root to the weld toe. The weld leg is the size of a fillet weld made in lap or T-joints.

Filler metal is metal deposited in a welded, brazed, or soldered joint during the welding process. Fusion welding is welding that uses fusion of the base metal or base metal and filler metal to make a weld. Fusion welding is the most common method of joining metals. Welding progression concern the addition of filler metal in a weld joint root and beyond. A joint root is the portion of a weld joint where joint members are the closest to each other. A joint root may be a point, a line, or an area. A root bead is weld beads that extends into or includes part the entire joint root. A root pass is the initial weld pass that provides complete penetration through the thickness of the joint member. Several weld beads (multiple-pass weld) may be required to complete a weld. A multiple-pass weld contains two or more weld beads.

2.4.2 Weld joints

A weld joint is the physical configuration at the juncture of the workpieces to be welded. Weld joints must be correctly designed and have adequate root openings to support the loads transferred from one workpiece to another through the welds. The following are some basic considerations in the selection of any weld joint:

- Whether the load will encounter tension, compression, bending, fatigue, or impact stresses.
- How the load is to be applied to the joint, i.e., whether the load is a static, impact, cyclic, or variable load
- The displacement of the load in relation to the joint
- The direction from which the load is to be applied to the joint.
- The cost of preparing the joint.

Weld joint design is based on the strength of the joint, safety requirements, and the service conditions under which the joint must perform. Additionally how stresses are to be applied during service, and whether tension, bending, or torsion is a factor, must be considered in joint design. Joint design requirements vary depending on whether the load is static, cyclic, or variable. Joints are also designed for economy or accessibility during construction and inspection. The five basic weld joints used are:

1- Butt
2- T
3- Lap
4- Corner
5- Edge

2.5 Selecting Electrodes

An electrode is a component of the welding circuit that conducts electrical current to the weld area. When current from a welding machine flows through the circuit to the electrode, an arc is formed between the end of the electrode and the work. The arc melts the electrode coating, electrode metal, and the base metal. The molten metal of the electrode flows into the crater and forms a solidified bond between the two pieces of metal being joined. As the weld solidifies, it forms a slag that shows the cooling rate of the deposited metal.

Electrodes are manufactured to weld different metals, and are also designed specifically for DC or AC welding machines. A few electrodes work equally well on either DC or AC. Electrodes usage also depends on the welding position. Some electrodes are best suited for flat position welding and horizontal fillet welding, while other types may be used in any position.

2.6 Material

Most important to design and manufacture this project is about the selecting of material that will be used it.

When selecting material for products, first consider is their mechanical properties like strength, toughness, hardness, elasticity, fatigue, and creep. The strength-to-weight and stiffness-to-weight ratios of materials are also important. There are three basic crystal structures in metal, body-centered cubic (bcc), face-centered cubic (fcc), and hexagonal close packed (hcp).

An ever-increasing variety of material is now available, each having its own characteristics, applications, advantages, and limitation. The following are the general types of materials used in manufacturing today, either individually or in combination.

Chapter 3

METHODOLOGY

3.1 Flow progress of the project

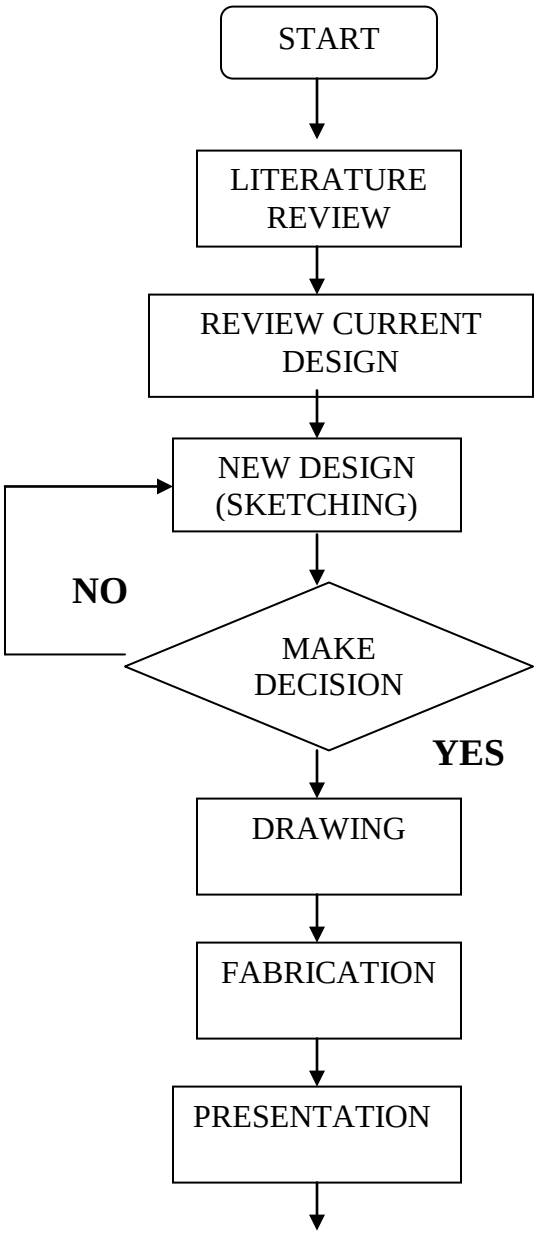

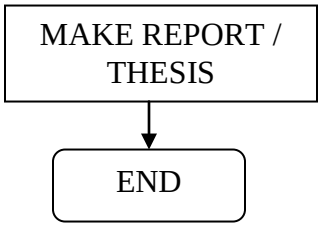

Figure 3.1(a): flow chart

3.2 Introduction

In order to obtain a smooth research flow, a research flow chart is drafted. The flow chart is the guidance on how the research is conducted. With helps, ideas and information from supervisor and my own research, all of the processes required to finish the lock are selected. The process started with literature review about the title of my project. Then review current design from sketching or picture on the internet. After that, make the own design to selected. Next, the new design will be discussion with supervisor to make the good decision. Then, all of the parts and equipments are put together to build the lock motorcycle in the fabrication process. The entire problem occurs are fixed when the process going back to design. The process continues after everything done and the lock will be presented and demonstration to the panel in final presentation.

3.3 Design

To design a good product, there are several factors must be consider before designing the new product. This factor is concluding all aspect of the principle in the design. The factors are:

1-ergonomic
2-strength
3-material
4-cost
5-environment (suitable)

3.4 Concept and Selection

This method used to make idea how to select best concept. Actually, from sketching the designer can make more idea how to develop creative concept for the product. I was make 4 concept to continue selection method.

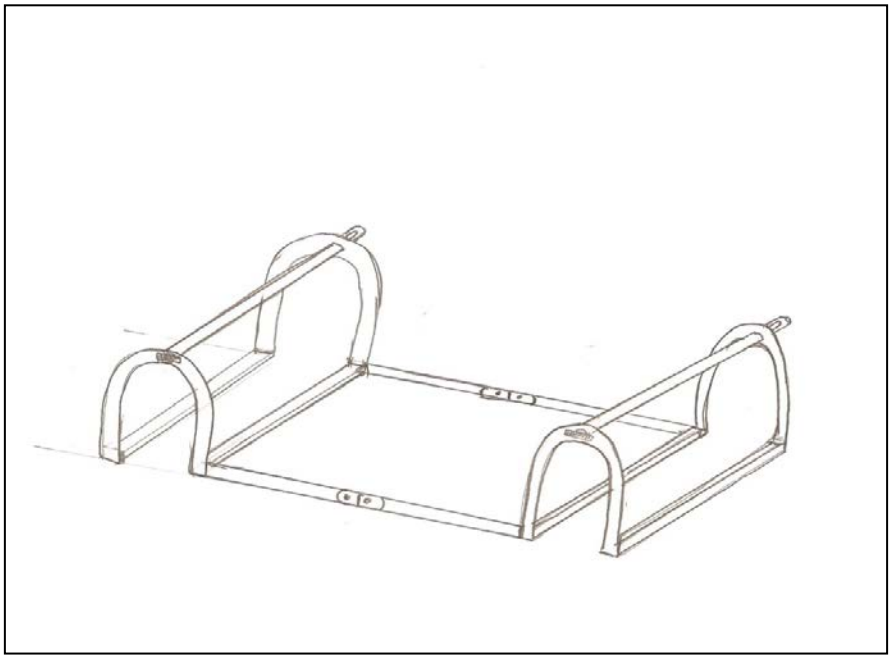

Figure 3.4.1: sketch concept 1

Advantage	Disadvantage
-can bend (flexible) -tire cannot move	-need more area -difficult to bring any ware

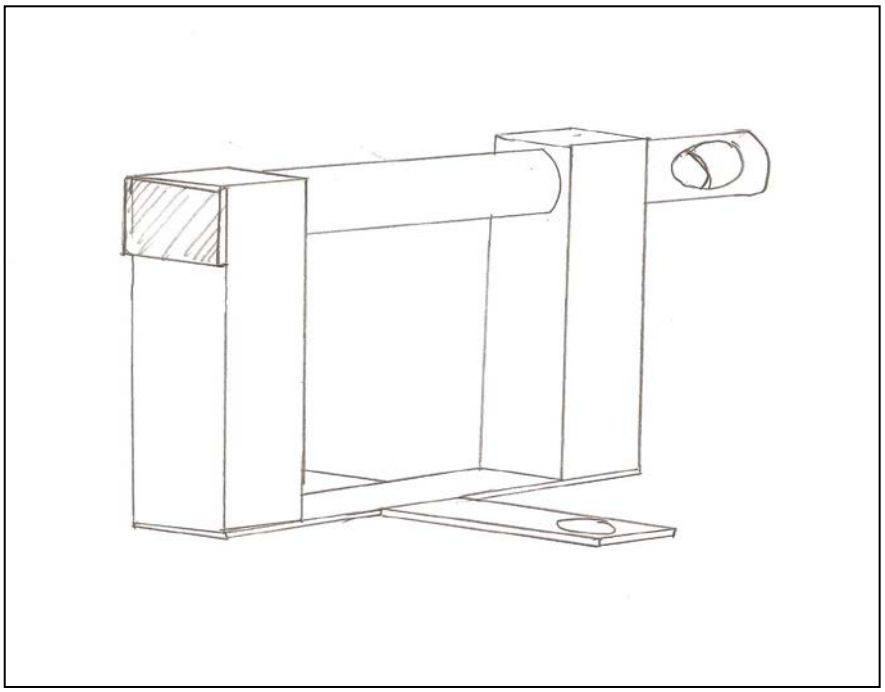

Figure 3.4.2: sketch concept 2

Advantage	Disadvantage
-easy to use -portable with all motorcycle -easy to bring it.	-little weight and easy to move

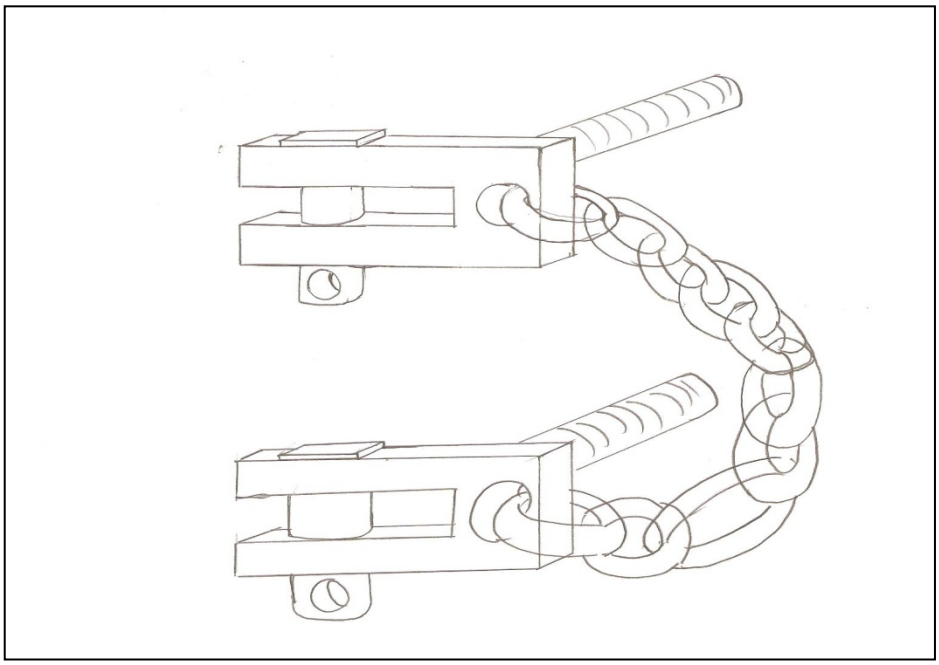

Figure 3.4.3: sketch concept 3

Advantage	Disadvantage
-can lock front and back tire in same time.	-the connection can cut easy

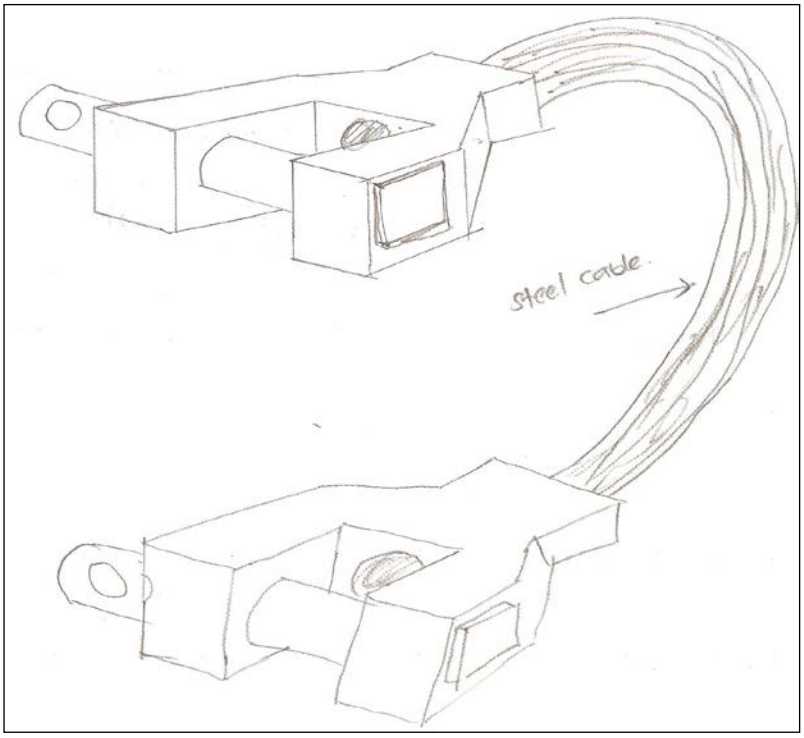

Figure 3.4.4: sketch concept 4

Advantage	Disadvantage
-suitable for all motorcycle. -more strength and protection	-the lock is heavy

3.5 METRIC CHART

For this analysis using the metric chart, it can make the data about to choose what the best concept that can be developed. Below is the data analysis from discussion with 5 people random.

*= no good	**= ok	***= not bad	****= good	*****= very good

Table 3.5: metric chart diagram analysis

Criteria		CONCEPT			
		1	**2**	**3**	**4**
Having little weight		***	**	***	*****
Easy to bring		****	***	****	****
Top security		*****	*****	***	***
More strength		****	****	***	*
Danger use it		*	**	**	**
Easy to keep		*****	***	***	***
Suitable cost		***	***	***	***
Suitable long		****	****	***	****
Suitable design (interesting)		****	*	*	**
Suitable size		****	*	***	***
	Very good	2	1	0	1
	Good	5	1	1	2
	Not bad	2	3	7	4
	Ok	0	2	1	2
	No good	1	2	1	1

Discussion:

From this chart, I have several concepts to meet. I have chosen concept 1, 2, 3, and 4 I use this chart to classify which concept of lock have made a good point with my criteria from my objectives project. From my observation and this analysis data, concept 1 locks have met the criteria. This show that this concept lock is a good product although some of it specifications did not made a good marks.

The criteria that used for this table is a generally and commonly criteria for some product. If that can see, for concept 1 until concept 4 the result for very good and good criteria was higher at concept 1. This maybe the concept and design for concept 1 is simpler than other concept. But it has the good hardness and high strength.

For concept 2, 3 and 4, basically it is the best design. But maybe for the function to lock motorcycle it is not necessary to used it. After make the decisions, concept 1 was selected and will be improvement for this project.

3.6 Computer Aided Design Drawing

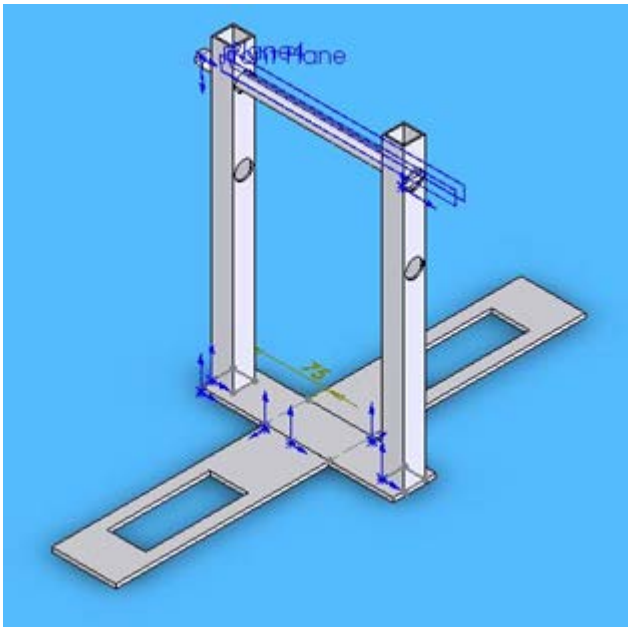

Figure 3.6: Isometric view

3.7 Fabrication process

In the fabrication, there are many process involve to develop the product. This is some several instruments that were used to fabricate this product:

1-Steel ruler

2-flexible ruler

3-hammer

4-file (smooth and bastard)

5-vertical band saw

6-drilling machine

7-Cold chisel

8-TIG weld machine

9-Hand grinding machine

Figure 3.7.1: material view

Firstly, selected the suitable material from studying in literature review. The material that will be used is mild steel. Before selected material, must consider about the hardness and the strength of this material to make sure the product in a good qualification.

Figure 3.7.2: measurement and marking

Second step is about measurement process. This process must be referring from sketching and design product. Used flexible ruler to mark the dimension of material. To measure must be precise the dimension to avoid error. After that, mark the dimension at material.

Figure 3.7.3: vertical band saw

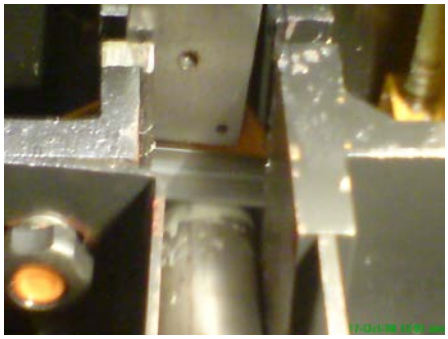

Figure 3.7.4: cutting process

Next is a cutting process use the vertical band saw machine to get the accurate dimension of material.

Figure 3.7.5: make hole at main rod lock

First used the file than grind at marking center of circle. After that drill at center point using drill machine. Firstly used small diameter tool drill to make some hole. Than continue the process with circle file to finish the process.

Figure 3.7.6: make hole at supporting main structure

Used same process for main structure. Actually I make two holes that can give the option to lock after finish all process.

Figure 3.7.7: removing material process

Next step is to remove some material for low heavy of product. First step is make holes at the marking line using drilling machine. Than used cold chisel and hammer to punch and break each joint of small hole. After finish all process, finishing the surface of material using Bastard File and Smooth File.

Figure 3.7.8: welding process

Used TIG weld machine to joint each part. For this process, make sure the voltage was given to welding is necessary and compulsory. If not, it can make the joint not fast and strong.

Figure 3.7.9: grind process

Then, used hand grind machine to remove the mold of joint.

Figure 3.7.10: painting process

Last process is painting the product. For give best result, made 3 layers of colors. This process is to give protection at product from water that can be product rusty. After painting, dry it in a time.

Chapter 4

RESULT AND DISCUSSION

4.1 Introduction

This chapter is show all the result after finished all the fabrication process. For security product, the main analysis is about the joint system and the hardness of material. That’s why for this chapter, the product was tested how much hardness and security that it can be using a real motorcycle.

4.2 Function of part

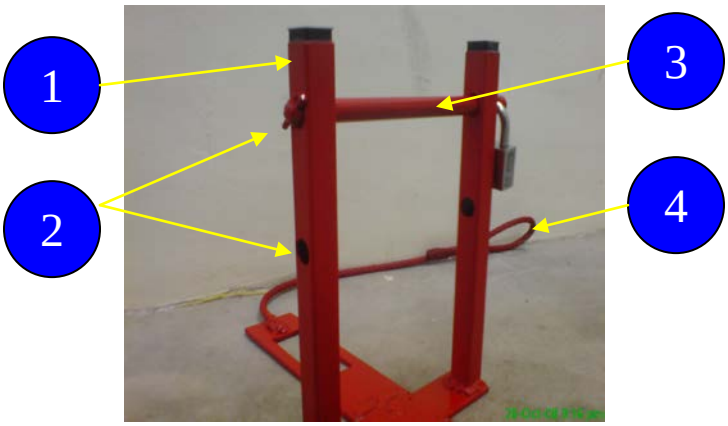

Figure 4.2(a): product view

Table 4.2(b): Explanation table

Number of part	**Function**
1	This is main structure of product. This part is to put the tire of motorcycle
2	Have two hole to give the option to customer which hole that want to be lock
3	Main lock for lock at rim tire
4	Have two steel cables to lock. This cable is a flexible function to at anywhere like at another motorcycle.

Figure 4.2(c): how to bring it.

4.3 Testing product

After finish all process, this product was testing at real tire motorcycle. This process to conform that this product is in a good condition or not.

Figure 4.3(a): front tire testing

Figure 4.3(b): back tire testing

4.3 Result of testing process

Table 4.4: result and analysis data

test / result	method				hardness	Strength
	push	**knock**	**attract**	**cut**		
Front tire	Not move	Not move	Not move	Cannot	yes	yes
Back tire	Not move	Not move	Not move	Cannot	yes	yes

4.5 Analysis cost

Table 4.5: analysis cost

No	Material	Quantity / size	cost (RM X / each)	(X) x quantity
1	cable steel	2 m	RM 15.00	RM 15.00
2	hasp	2	RM 1.00	RM 2.00
3	rubber cap	2	RM 0.30	RM 0.60
4	lock	2	RM 10.00	RM 20.00
5	mild steel		RM 25.00	RM 25.00
6	spray paint	1	RM 5.00	RM 5.00
			Total	**RM 67.60**

Chapter 5

CONCLUSION AND RECOMMENDATION

5.1 Introduction

In this chapter overall project is conclude and some recommendation recognize. These recommendations based on the project ant it use for the study or future development of this project**.**

5.2 Conclusion

For this project, it is concluding that my project was succeeding to the objective target. The objective is about:

1-design and fabricate the new concept of antitheft lock for motorcycle with high security.

2-Must be deportable and user friendly.

Beginning first week until fifteen weeks included almost all steps of the report such as literature review, design, fabrication process and others was done.

5.3 Recommendation

The new concept of security antitheft lock needs some improvement to make it much better. For the future study in this project, some recommendation had identified. The improvement will affect the performance and operation of in high security lock. The idea to improve the product is to make it reliable in the situation and make it better in performance. The recommendation for the future study on this project is as below:

- The production on the material must less heavy to make it can bring and portable user
- More security if the system of lock use the alarm system, and code number lock system

Through these recommendations, the new generation antitheft lock system will be improves either at appearance or at the performance itself. The improvement of the product will satisfy its user and compatible with other antitheft lock in the current market

REFERENCE

- Manufacturing Engineering and Technology (fourth edition)
  By Serope Kalpakjian and Steven R. Schmid

- Welding Skills (third edition)
  By B.J. Moniz and R.T. Milller

- http://en.wikipedia.org/wiki/Material_selection
- http://en.wikipedia.org/wiki/Anti-theft_system

APPENDIX A

Solid Works 2D Drawing

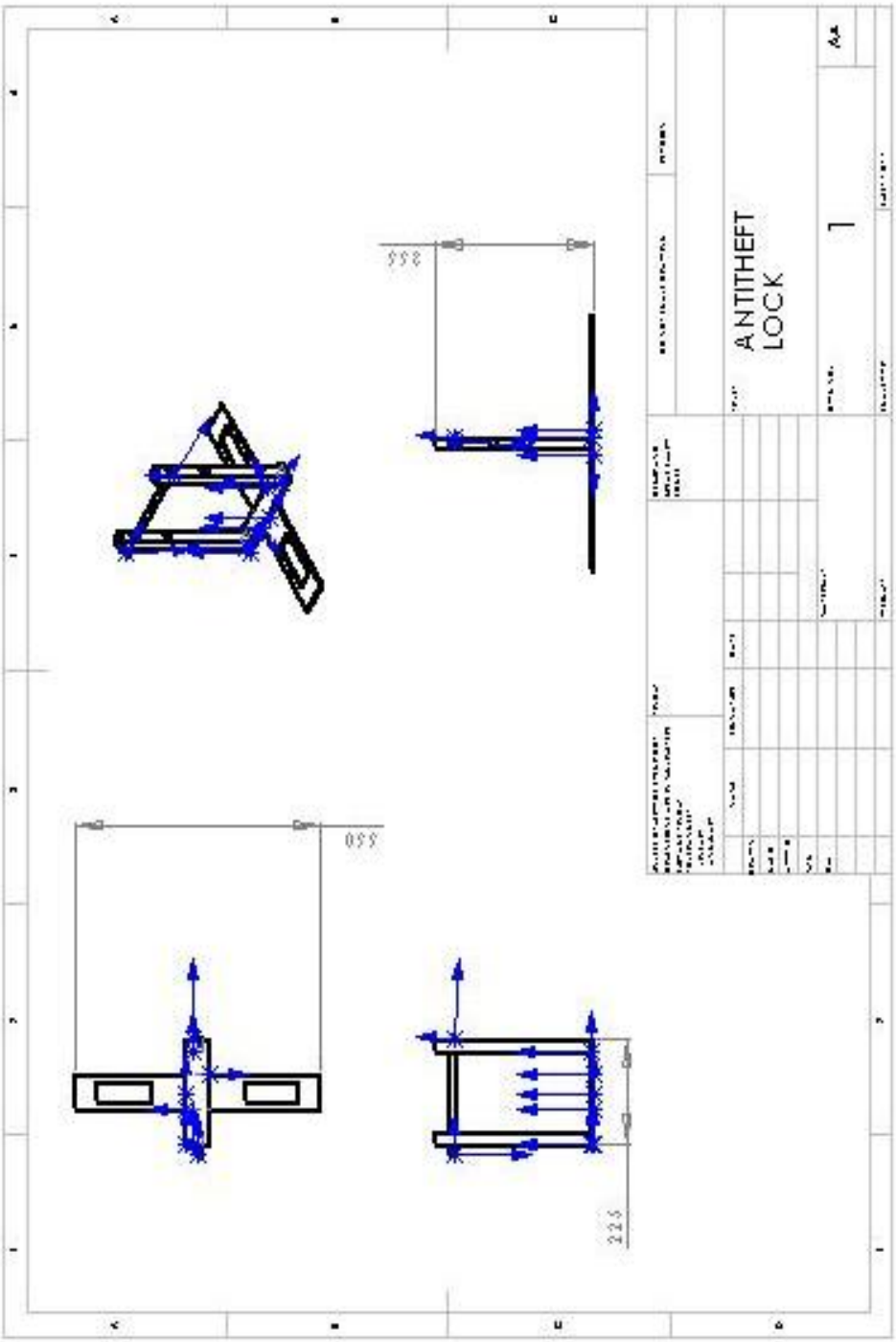

APPENDIX B

Solid Works 2D Drawing

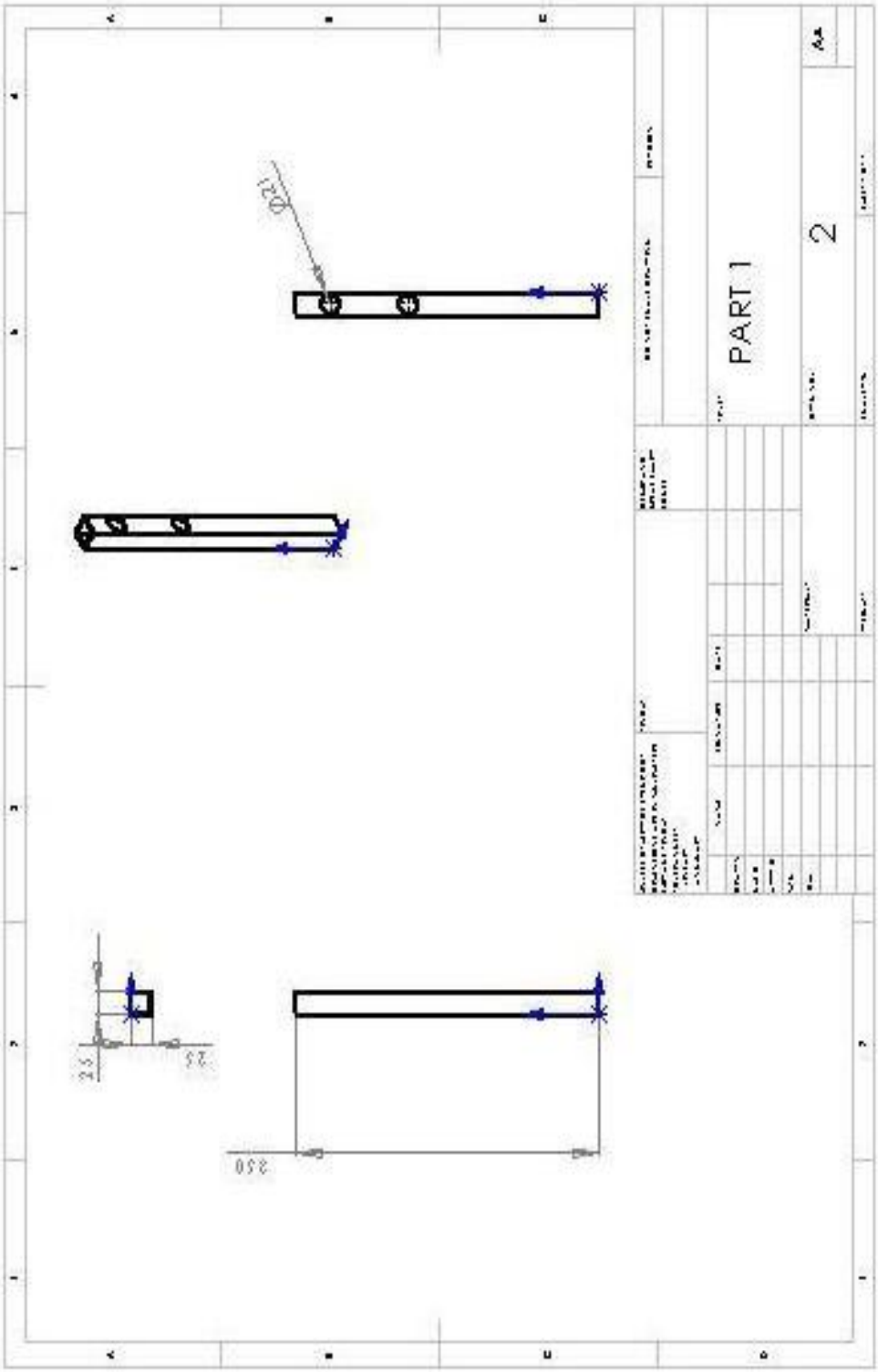

APPENDIX C

Solid Works 2D Drawing

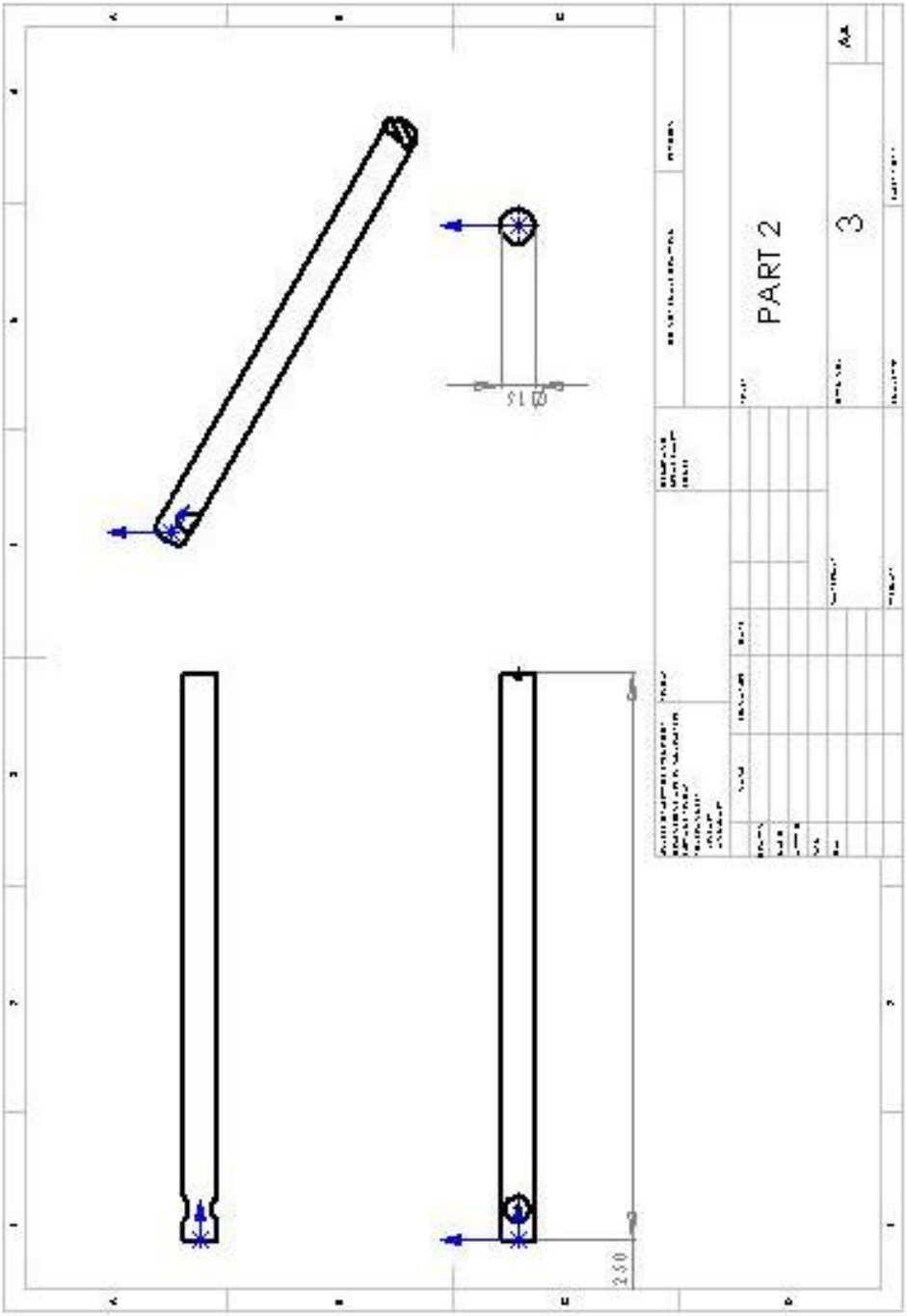

APPENDIX D

Solid Works 2D Drawing

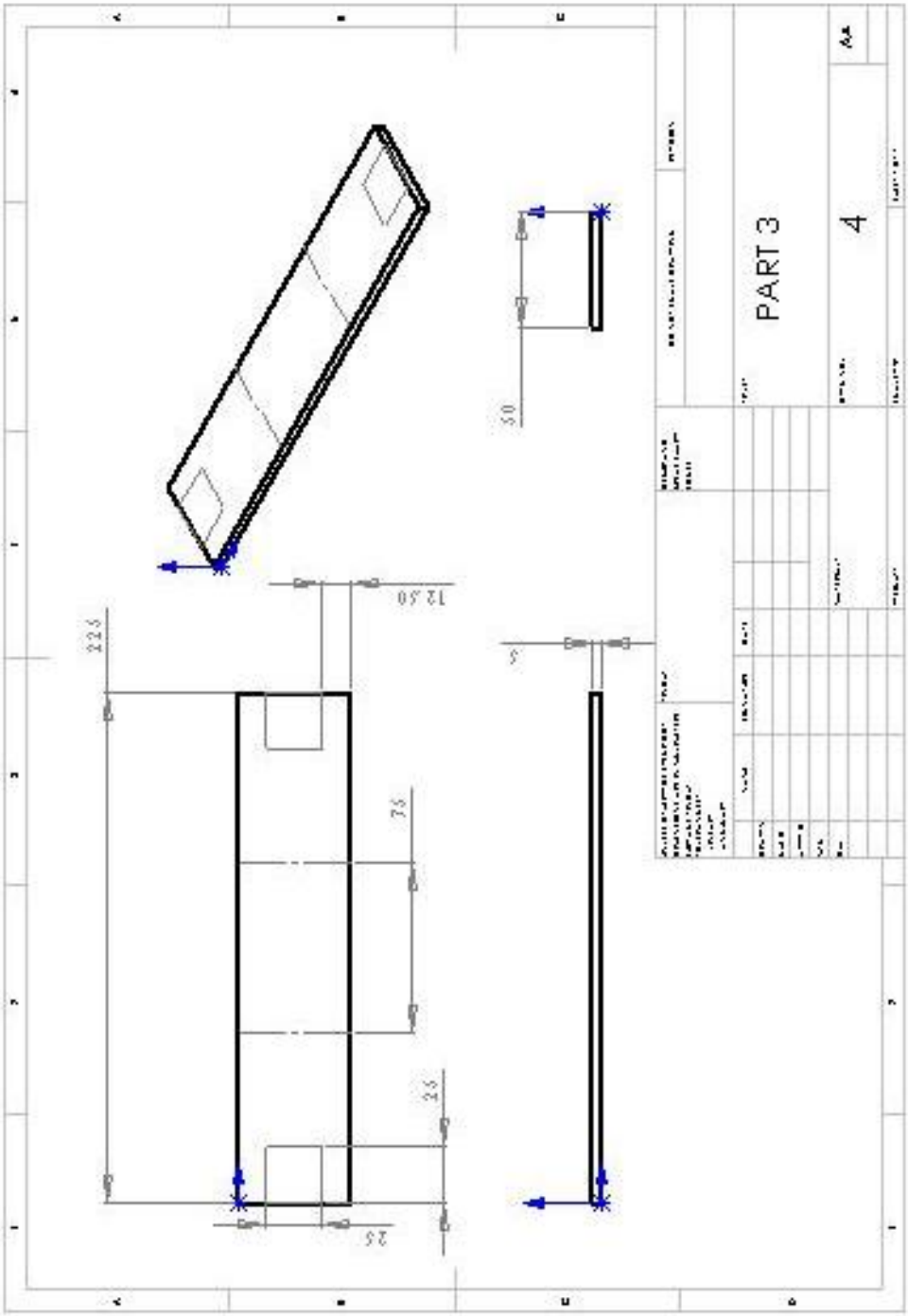

APPENDIX E

Solid Works 2D Drawing

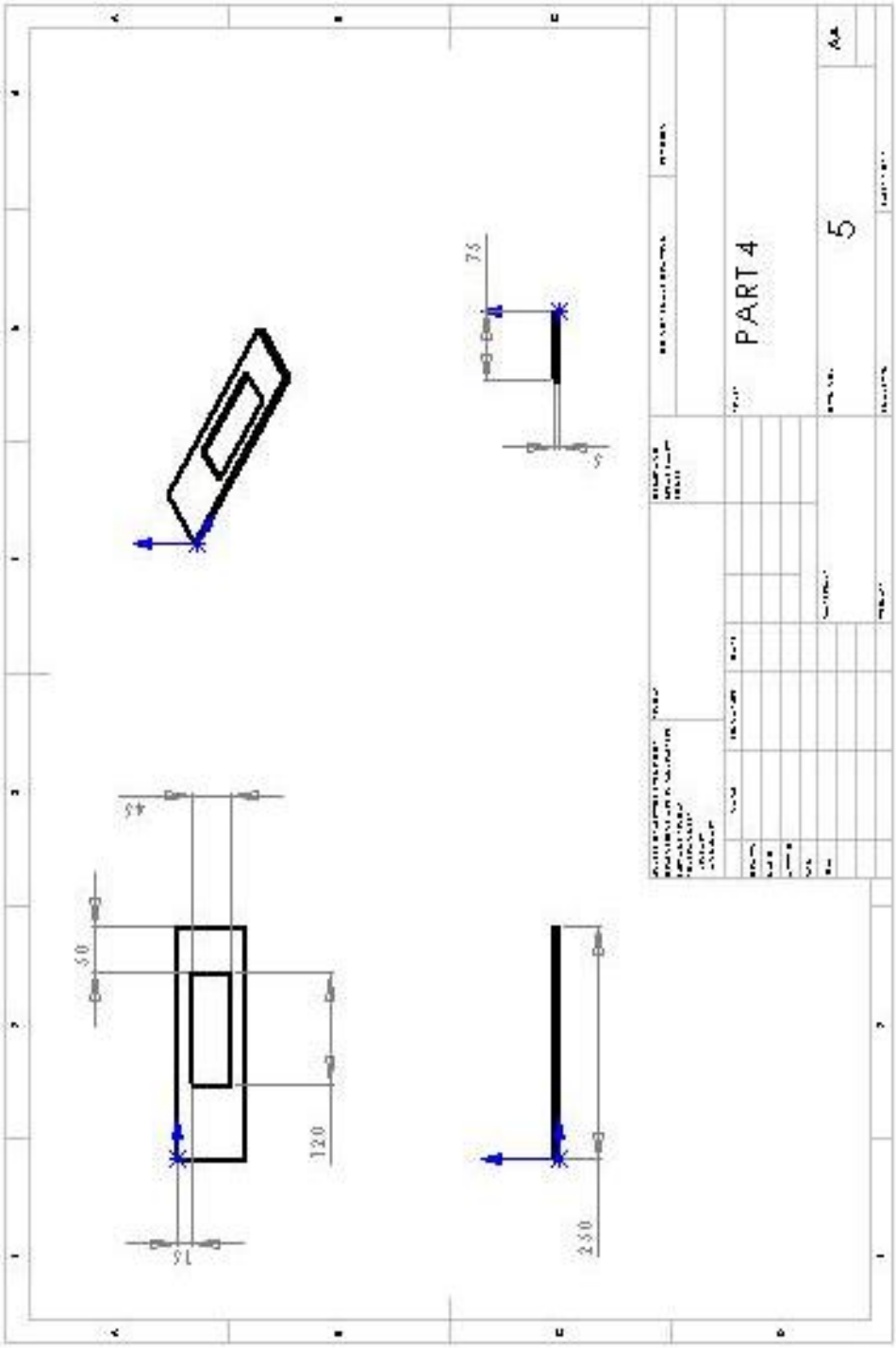

APPENDIX F

Solid Works 2D Drawing