MODIFICATION OF EXISTING WATER TURBINE SYSTEM FOR APPLICATION AT LOCAL RIVER

AHMAD MAKHZAN BIN AHMAD KAMAL

BACHELOR OF ENGINEERING

UNIVERSITI MALAYSIA PAHANG

2010

UNIVERSITI MALAYSIA PAHANG

BORANG PENGESAHAN STATUS TESIS♦

JUDUL: **MODIFICATION OF EXISTING WATER TURBINE SYSTEM FOR APPLICATION AT LOCAL RIVER**

SESI PENGAJIAN: **2010/2011**

Saya **AHMAD MAKHZAN BIN AHMAD KAMAL (870328-03-5207)**
(HURUF BESAR)

mengaku membenarkan tesis (Sarjana Muda/~~Sarjana~~ /~~Doktor Falsafah~~)* ini disimpan di Perpustakaan dengan syarat-syarat kegunaan seperti berikut:

1. Tesis adalah hakmilik Universiti Malaysia Pahang (UMP).
2. Perpustakaan dibenarkan membuat salinan untuk tujuan pengajian sahaja.
3. Perpustakaan dibenarkan membuat salinan tesis ini sebagai bahan pertukaran antara institusi pengajian tinggi.
4. **Sila tandakan (√)

[ ]	**SULIT**	(Mengandungi maklumat yang berdarjah keselamatan atau kepentingan Malaysia seperti yang termaktub di dalam AKTA RAHSIA RASMI 1972)
[ ]	**TERHAD**	(Mengandungi maklumat TERHAD yang telah ditentukan oleh organisasi/badan di mana penyelidikan dijalankan)
[√]	**TIDAK TERHAD**	

Disahkan oleh:

(TANDATANGAN PENULIS) | (TANDATANGAN PENYELIA)

Alamat Tetap:

1422 BAUNG BAYAM,
OFF JLN YAACOBIAH, 15200
KOTA BHARU, KELANTAN.

EN AMIR BIN ABDUL RAZAK
(Nama Penyelia)

Tarikh: 6 DISEMBER 2010

Tarikh : 6 DISEMBER 2010

CATATAN:
- * Potong yang tidak berkenaan.
- ** Jika tesis ini SULIT atau TERHAD, sila lampirkan surat daripada pihak berkuasa/organisasi berkenaan dengan menyatakan sekali tempoh tesis ini perlu dikelaskan sebagai atau TERHAD.
- ♦ Tesis dimaksudkan sebagai tesis bagi Ijazah doktor Falsafah dan Sarjana secara Penyelidikan, atau disertasi bagi pengajian secara kerja kursus dan penyelidikan, atau Laporan Projek Sarjana Muda (PSM).

UNIVERSITI MALAYSIA PAHANG

FACULTY OF MECHANICAL ENGINEERING

We certify that the project entitled *Modification of Existing Water Turbine System for Application at Local River* is written by *Ahmad Makhzan Bin Ahmad Kamal*. We have examined the final copy of this project and in our opinion; it is fully adequate in terms of scope and quality for the award of the degree of Bachelor of Engineering. We herewith recommend that it be accepted in partial fulfillment of the requirements for the degree of Bachelor of Mechanical Engineering.

DR. MAISARA MOHYELDIN GASIM MOHAMED

Examiner Signature

MODIFICATION OF EXISTING WATER TURBINE SYSTEM FOR APPLICATION AT LOCAL RIVER

AHMAD MAKHZAN BIN AHMAD KAMAL

Thesis submitted in partial fulfillment of the requirements
for the award of the degree of
Bachelor of Mechanical Engineering

Faculty of Mechanical Engineering
UNIVERSITI MALAYSIA PAHANG

NOVEMBER 2010

SUPERVISOR'S DECLARATION

I hereby declare that I have checked this project and in my opinion, this project is adequate in terms of scope and quality for the award of the degree of Bachelor of Mechanical Engineering.

Signature
Name of Supervisor: MR AMIR BIN ABDUL RAZAK
Position: LECTURER
Date: 6 DECEMBER 2010

STUDENT'S DECLARATION

I hereby declare that the work in this project is my own except for quotations and summaries which have been duly acknowledged. The project has not been accepted for any degree and is not concurrently submitted for award of other degree.

Signature
Name: AHMAD MAKHZAN BIN AHMAD KAMAL
ID Number: MA 07075
Date: 6 DECEMBER 2010

Dedicated to my beloved family & friends

ACKNOWLEDGEMENTS

I would like to express my deepest appreciation and sincere gratitude to my supervisor, Mr Amir Bin Abdul Razak, for his wisdom, invaluable guidance and professionalism from the beginning to the end in making this research possible. He has been an excellent mentor and has provided continuous encouragement and constant support throughout my project. It should be recognized that the success of this thesis was through her cooperation and assistance from the initial to the final level which enabled me to develop an understanding of the subject.

I also would like to extend my heartiest thanks to my colleagues who have rendered assistance and support in one way or another to make this study possible. I am grateful for their support and invaluable help.

Special thanks to my beloved parents and siblings whose endless support and understanding have been profound throughout the difficult times of this project. Without your love and support I am sure that I would not have been able to achieve so much. Lastly, it is a pleasure to thank those who supported me in any respect during the completion of the project. Without the generous help of these individuals, this research would not have been possible.

ABSTRACT

This thesis is about doing analysis and investigations on river flow rate in Malaysian River which focusing at Sungai Pahang. Through this analysis and investigation could obtain the potential of running a Water Turbine System (WTS). The main problem statement is on location limitation to obtain peak flow rate of river to running water turbine systems which is depending on depth and width of the river and also from the velocity of sectional area of river. Other than that, choosing most suitable water turbine system is also one of main criteria to be taken in this research. Water Turbine are one of clean renewable energy sources which holding high percentage of energy resource provider among renewable energy. The analysis and investigation are constrained from data of river volume flow rate (m^3/s) which shows there are peaks values of volume flow rate in Pahang River. This thesis will carry on with modeling a WTS that can be recommended to construct in Pahang River. The analysis on flow rate of Pahang River are done by calculating potential Power (W) that could produced based on volume flow rate data that obtain from Department of Irrigation and Drainage of Malaysia. Since water turbine could provide electricity power without affecting pollution to the environment. Water turbines systems also are cheapest resource to be obtain. Final modeling of water turbine system is completed by using SolidWorks.

ABSTRAK

Tesis ini adalah berkenaan analisis dan kajian bedasarkan maklumat aliran sungai di Malaysia yang mengfokuskan kepada Sungai Pahang. Melalui analisis dan kajian di buat, kita dapat mengenalpasti potensi untuk menjana sistem turbin air. Namun begitu permasalahan utama ialah batasan lokasi untuk mendapatkan bacaan aliran sungai yang tinggi dan seragam untuk menjalankan system turbin air yang bergantung kepada kedalaman dan kelebaran sungai dan juga halaju air dari keluasan persegi. Selain itu memilih system turbin air yang bersesuaian adalah perkara yang mesti diutamakan di didalam kajian ini. Turbin air adalah salah satu sumer pembaharuan alam sekitar yang bersih yang memegang antara peratusan tertinggi dalam penyumbang tenaga elektrik melalui sumber pembaharuan alam sekitar. Analisis dan kajian yang dibuat berdasarkan maklumat aliran sungai (m^3/s) menunjukkan saliran sentiasa di puncak di Sungai Pahang. Kajian tesis ini diteruskan dengan mereka bentuk satu system turbin air yang bersesuaian untuk di pasang di Sungai Pahang. Analisis bacaan aliran sungai dibuat dengan mengira potensi tenaga (W) yang mampu dihasilkan berdasarkan maklmat yang di peroleh dari Jabatan Pengairan dan Saliran Malaysia. Memandangkan sistem turbin air boleh menyubangkan tenaga electrik tanpa mengotorkan alam sekitar. Rekabentuk sistem turbin air di jalankan dengan menggunakan SolidWorks.

TABLE OF CONTENTS

CHAPTER 3 METHODOLOGY

CHAPTER 4 RESULTS AND DISCUSSION

CHAPTER 5 CONCLUSION

LIST OF TABLES

LIST OF FIGURES

LIST OF ABBREVIATIONS

AQUW	Low-RPM fast flow propeller

CFD	Computational fluid dynamics
GCK	Gorlov Turbine by GCK Technology
JPS	Jabatan Pengairan dan Saliran Malaysia (Department of Irrigation and Drainage Malaysia)
MCT	Marine Current Turbine
WTS	Wind Turbine System

CHAPTER 1

INTRODUCTION

1.1 INTRODUCTION

A water turbine is a rotary machine that takes energy from moving water. Hydroelectric power is widely used by many major utility suppliers in the form of large hydroelectric dams. Of course all the hydroelectric dams in the world won't help provide power to a home or village outside the reach of the electric power grid. "Micro-hydro" power is another option for gathering electric power from moving water sources. By using small water turbines fed from a river or stream, individuals can gather consistent power from the water, no matter how far from the utility power grid they may be. In this project, we will focus on usage of water turbine that suitable for low pressure head river. These system Water turbines generate very reliable power with a very simple design. Some kind of "runner" or propeller is attached to a shaft that operates an alternator to generate power when water turns the runner. There are quite a few types of turbines, but they fall into three major styles: impulse turbines, reaction turbines and submersible propeller turbines. Each is ideally suited for a different type of water supply. No matter what source of running water you have on your property, if it supplies a year-round flow of water, there is most likely a water turbine well-suited to provide electricity.

1.2 PROBLEM STATEMENT

Usually, rivers in Malaysia are more to be in low pressure head rivers because they depend on the flow rate which in meter cube per second (m^3/s). The flow rate is depending on depth and width of the river and also from the velocity of sectional area of river. So the main problem is on location limitations. There may be several potential water source points, particularly if the water source is a river or stream. Each one will have a different elevation and linear distance from the hydro turbine. In selecting the best site, several factors to consider are water availability, site access, topography of the site, elevation (potential static head), linear distance from the turbine, head pressure required for the turbine, and the volume of water required for the turbine. The best site will usually be the one that has the best cost-benefit ratio (the least cost per kWh of electricity produced). The site with the highest elevation may not be the best, as that site may also have the highest incremental cost of diverting and transporting the water to the turbine.

Third problem statement that could be found in this research is to choose the best water turbine system because there are a lot of water turbine systems that can be used in producing electricity. Each water turbine system have own advantages and limitation at certain condition.

1.3 OBJECTIVE

- To study and analysis the potential of usage water turbine in Malaysian river (focusing Pahang River).
- Modeling of modification water turbine system.

1.4 SCOPE OF PROJECT

The analysis of rivers in Malaysia which focusing on Sungai Pahang by discussing the flow rate of river flow, then modeled a suitable water turbine system based on the objective.

The literature review is about finding detail information about turbine blade and turbine system. The turbine blade will be rotating driven by a potential energy produced by the water flow rate, this rotation will directly rotating a shaft that joint alongside turbine blade. Rotation by shaft will transfer a rotating alternator or generator which directly will produced electricity.

In the modeling work, all parts in the water turbine system have been done using SolidWorks 2010. But there are focusing on turbine blade, rotating shaft with a bearing to be done at the design water turbine system. The generators or alternators are not to be done since it’s a mechanical part that could be obtained as a part to generate electricity.

CHAPTER 2

LITERATURE REVIEW

2.1 INTRODUCTION

Hydropower: the energy from moving water, is one of the oldest renewable energy sources and the total global electric power capacity of hydropower, including large hydropower, small hydropower, and ocean power, was approximately 820 GW in 2005, which accounted for almost 20% of the renewable energies (Ren21, 2006). However, the growth rate of large hydropower has declined somewhat over recent years since most major sites are either already being exploited, or are unavailable for other reasons such as environmental considerations. In its place, small hydropower systems have been increasingly used as an alternative energy source so that a small system is installed in small rivers or streams with little environmental effect. In this way such small hydropower systems do not require a dam to be built.

Water turbines can be classified by the type of generator used, or the water resources in the installed place. A water-head turbine is the most generally used system, and this makes the turbine rotate by converting the potential energy of the water in to kinetic energy. This turbine has the advantage of high efficiency, but the construction cost for a dam or waterway is high and can cause significant environmental problems. Water stream turbines are rotated by the force of the river or the ocean current. These turbines are essentially like wind turbines underwater, except that the density of water is 800 times greater than air. There are two types of water stream turbines; horizontal axis turbines and vertical axis turbines. Fig. 2.1(a) shows a horizontal axis water turbine using a propeller. It consists of two or three blades and a single or twin rotor system. The rotor is rotated by the lift force generated by the fluid flow. The turbine can

generate in one way flow or two way flow, according to the geometric shape of the rotor blade and pitch control mechanism. Fig. 2.1(b) shows a vertical axis water turbine, also known as a cross-flow turbine. This turbine is based on the Darrieus wind turbine which is rotated by the lift and drag forces (ParaschivoiuI, 2002). The vertical axis type has the advantage that the rotor can be rotated regardless of the flow direction.

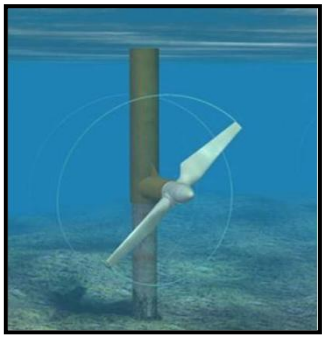

Figure 2.1 (a): Horizontal Axis water turbine

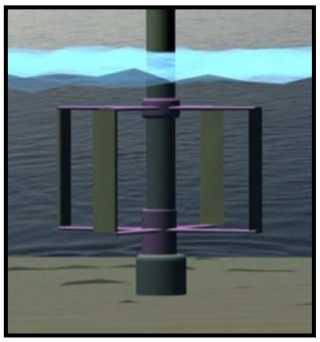

Figure 2.1 (b): Vertical Axis water Turbine

Source: (In Seong Hwang, 2009)

The water stream turbine has not been commercialized at the present time; however, this turbine is increasingly being recognized as a tidal power generation system in many countries, including UK, USA, Canada, and Norway. The MCT Technology, in UK, developed a marine current turbine of 300 kW in 2003, which was installed in Lynmouth, Devon for experimental purposes. They also installed a twin rotor system rated at 1 MW in 2007 for the prototype and test-bed for the commercial

technology. GCK Technology in the Netherlands developed the Gorlov turbine in 2000 (Gorban' AN, 2001).

Hydro-electric power, using the potential energy of rivers, now supplies 17.5% of the world's electricity (99% in Norway, 57% in Canada, 55% in Switzerland, 40% in Sweden, 7% in USA). Apart from a few countries with an abundance of it, hydro capacity is normally applied to peak-load demand, because it is so readily stopped and started. It is not a major option for the future in the developed countries because most major sites in these countries having potential for harnessing gravity in this way are either being exploited already or are unavailable for other reasons such as environmental considerations. Growth to 2030 is expected mostly in China and Latin America.

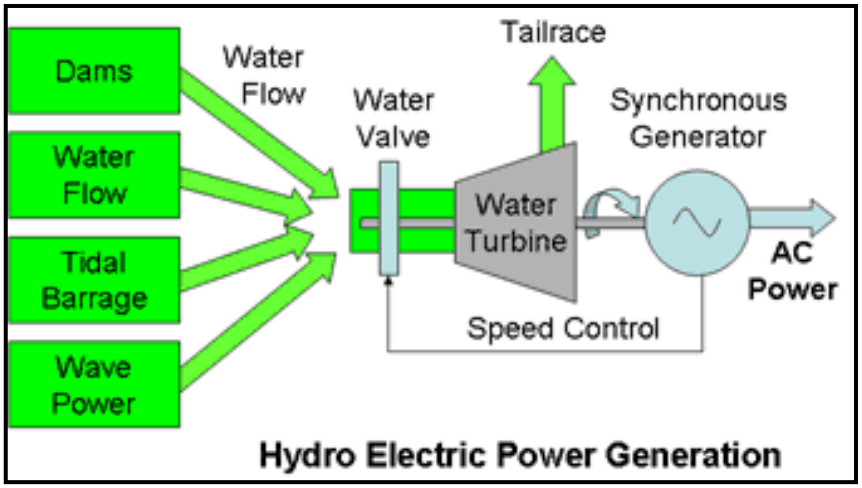

Figure 2.1 (c) : Sources for hydroelectric power

Source: www.mpoweruk.com/hydro_power.htm

Hydro energy is available in many forms, potential energy from high heads of water retained in dams, kinetic energy from current flow in rivers and tidal barrages, and kinetic energy also from the movement of waves on relatively static water masses. Many ingenious ways have been developed for harnessing this energy but most involve directing the water flow through a turbine to generate electricity.

2.2 WATER TURBINES

A water turbine is a rotary engine that takes energy from moving water. Water turbines were developed in the nineteenth century and were widely used for industrial power prior to electrical grids. Now they are mostly used for electric power generation. They harness a clean and renewable energy source.

Flowing water is directed on to the blades of a turbine runner, creating a force on the blades. Since the runner is spinning, the force acts through a distance (force acting through a distance is the definition of work). In this way, energy is transferred from the water flow to the turbine. Water turbines are divided into two groups; reaction turbines and impulse turbines. The precise shape of water turbine blades is a function of the supply pressure of water, and the type of impeller selected.

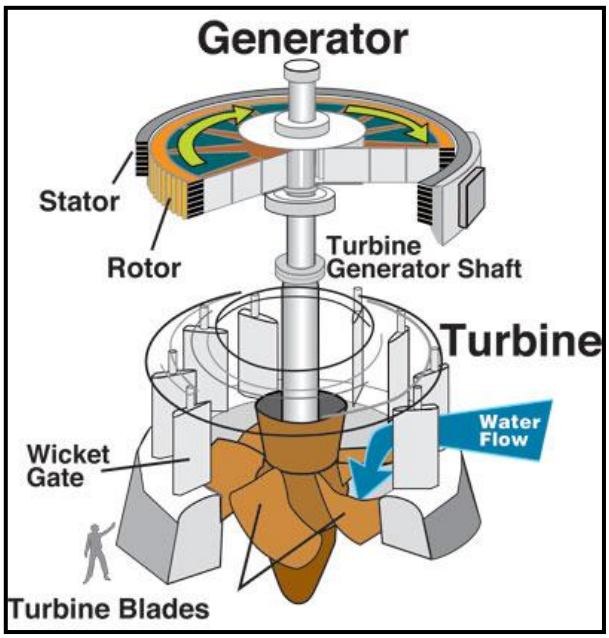

Figure 2.2: Hydraulic turbine and electrical generator, cutaway view

Source: commons.wikimedia.org

2.2.1 Reaction turbines

Reaction turbines require a much larger amount of water flow than impulse styles, but can operate with as little as two feet of head, making them ideal for sites where there may be relatively flat land, but a large water flow. They use either a 'traditional' reaction style runner like the Neptune or Nautilus, or a propeller runner like the PowerPal and Niade.

With reaction turbines, the water is routed either through a pipeline into an enclosed housing like the Nautilus model, or through a canal to an open flume like the Niade, PowerPal and Neptune models. The turbine runner is immersed in the water, which exits the housing through the turbine, turning the alternator as it 'drops' through the runner blades. No matter which runner style a reaction turbine uses, a specially designed outlet tube increases the turbine power output by creating suction as the water exits the system.

Reaction turbines are acted on by water, which changes pressure as it moves through the turbine and gives up its energy. They must be encased to contain the water pressure (or suction), or they must be fully submerged in the water flow. Newton's third law describes the transfer of energy for reaction turbines. Most water turbines in use are reaction turbines. They are used in low and medium head applications.

- Francis
- Kaplan, Propeller, Bulb, Tube, Straflo
- Tyson
- Water wheel

2.2.2 Impulse turbines

An impulse turbine operates on the same principle as a toy pinwheel. Water strikes the turbine runner, and pushes it in a circle. The water is delivered to the runner through a pipeline, and out a small nozzle which maximizes the force available to operate the turbine.

These types of water turbines work best in sites where the water source has high head (20 feet or more). Head is the vertical distance between where the water enters the turbine system (in this case, into a pipeline) and where it reaches the turbine runner.

Small impulse water turbines require minimal water flow volume, so they are ideal for sites where a relatively small amount of water runs down a fairly steep hill, as in a hill-side stream or small waterfall. The most well-known type of impulse turbine is the Pelton wheel style as used in Harris Pelton turbines. But in higher flow sites, a Turgo style runner such as the one use in the Stream Engine has a higher output potential.

Impulse turbines change the velocity of a water jet. The jet impinges on the turbine's curved blades which change the direction of the flow. The resulting change in momentum (impulse) causes a force on the turbine blades. Since the turbine is spinning, the force acts through a distance (work) and the diverted water flow is left with diminished energy. Prior to hitting the turbine blades, the water's pressure (potential energy) is converted to kinetic energy by a nozzle and focused on the turbine. No pressure change occurs at the turbine blades, and the turbine doesn't require housing for operation. Newton's second law describes the transfer of energy for impulse turbines. Impulse turbines are most often used in very high head applications.

- Pelton
- Turgo
- Michell-Banki (also known as the Crossflow or Ossberger turbine)

2.2.3 Submersible Propeller Water Turbines

These turbines are the least efficient of the three styles, but also the simplest design. A propeller mounted on the front of the turbine is attached to an alternator inside the main turbine housing. When submerged in a fast moving water source, the propeller is rotated by the force of the passing water.

Propeller style generators work well for locations with a fast moving, relatively deep stream or river, where a water diversion system is not possible, or when mounted on a

moving boat. The AQUW submersible propeller turbine was originally designed for marine use, but can be easily installed in a fast moving river or large stream.

2.3 GENERATORS

A device that converts mechanical energy to electrical energy is known as a generator. A generator is quite similar to that of a water pump. A water pump creates a flow of water but it does not create water. A generator also creates flow of charges through its wires but does not create electricity. Sample generators are shown in Figure 2.3. In most cases the source of mechanical energy required for the functioning of a generator comes from:

1. Water falling from a height through a turbine.
2. A wind turbine.
3. An internal combustion engine
4. Compressed air.

Generators are divided into two major categories depending upon the source of current i.e., Alternating current (AC) and Direct current (DC). Though the basic working principles of both these generators are similar, they differ in construction. These machines are also classified on the basis of the source of the mechanical energy by which they are powered, like water or steam power.

If a coil of wire, kept in a magnetic field and connected to a galvanometer, is rotated then current will be induced within the coil. When current gets induced the galvanometer shows deflection. Factors on which the magnitude of induced current depends are:

1. Strength of the magnetic field.
2. Length of the coil.
3. Velocity with which the coil rotates within the field.

The main idea behind the rotation of the coil is to make it in motion with respect to the magnetic field. Although in most cases, DC generators have a stationary magnetic fiels and a rotating coil and vice-versa for AC generators.

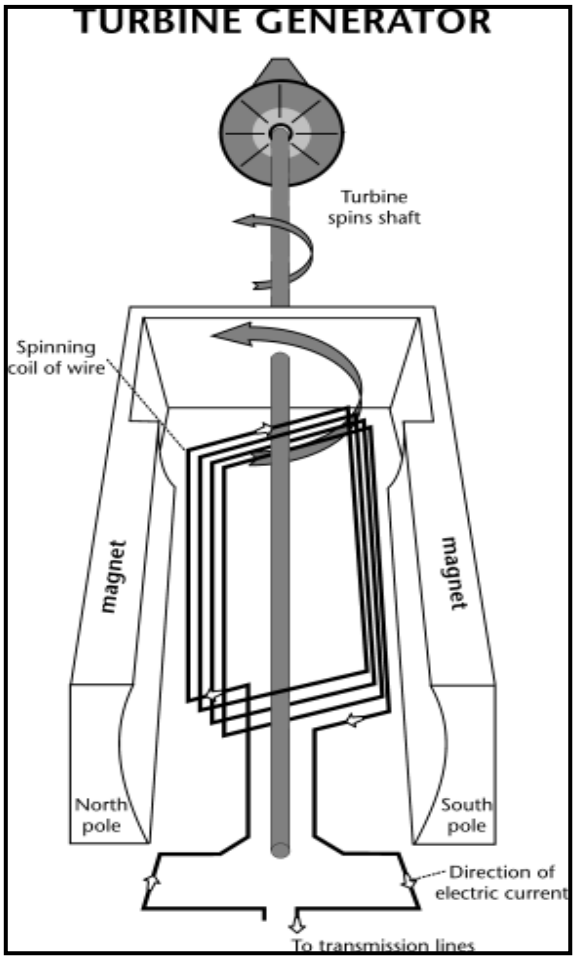

Figure 2.3

Working systems of Generator

Source: http://aaenvironment.com/Electricity.htm

For an electric generator, the galvanometer gets replaced by some electrical device. The electric power produced by the generator changes constantly as the coil moves through the magnetic field. Initially the induced current moves in a single direction. When the coil becomes parallel to the magnetic lines of forces, the current produced is zero. Thereafter, the lines of forces are cut in the opposite direction by the coil as it continues to rotate. Hence, the generated current also flows in the opposite direction. Now, as a result, a rotating coil in a fixed magnetic field of this type will produce alternating current. This type of current travels in one direction for a moment

and then the opposite direction at the next moment. Alternating current is used in most household appliances. Keeping a soft iron core inside the coil of wire can increase the efficiency of a generator. Longer the wire greater will be the efficiency.

Direct current electricity can be produced by modifying an AC generator. A commutator helps in doing the needful. A commutator basically is a half cut slip ring, with both the halves insulated from each other. The brushes slip from one half of the commutator to the other when the direction of the current in the coil reverses. They are arranged in a manner to make the slip easy. As a result of which the external circuit current always flow in the same direction making it a direct current.

2.4 MAINTAINANCE

Turbines are designed to run for decades with very little maintenance of the main elements; overhaul intervals are on the order of several years. Maintenance of the runners and parts exposed to water include removal, inspection, and repair of worn parts. Normal wear and tear includes pitting from cavitations, fatigue cracking, and abrasion from suspended solids in the water. Steel elements are repaired by welding, usually with stainless steel rod. Damaged areas are cut or ground out, then welded back up to their original or an improved profile. Old turbine runners may have a significant amount of stainless steel added this way by the end of their lifetime. Elaborate welding procedures may be used to achieve the highest quality repairs. Other elements requiring inspection and repair during overhauls include bearings, packing box and shaft sleeves, servomotors, cooling systems for the bearings and generator coils, seal rings,wicket gate linkage elements and all surfaces.

2.5 ENVIROMENTAL EFFECT

Water turbines are generally considered a clean power producer, as the turbine causes essentially no change to the water. They use a renewable energy source and are designed to operate for decades. They produce significant amounts of the world's electrical supply. Historically there have also been negative consequences, mostly associated with the dams normally required for power production. Dams alter the natural ecology of rivers, potentially killing fish, stopping migrations, and disrupting

peoples' livelihoods. For example, American Indian tribes in the Pacific Northwest had livelihoods built around salmon fishing, but aggressive dam-building destroyed their way of life. Dams also cause less obvious, but potentially serious consequences, including increased evaporation of water (especially in arid regions), build up of silt behind the dam, and changes to water temperature and flow patterns. Some people believe that it is possible to construct hydropower systems that divert fish and other organisms away from turbine intakes without significant damage or loss of power; historical performance of diversion structures has been poor. In the United States, it is now illegal to block the migration of fish so fish ladders must be provided by dam builders. The actual performance of fish ladders is often poor.

CHAPTER 3

METHODOLOGY

3.1 INTRODUCTION

The modeling process of the water turbine system is consists of four steps to realize the objective of design. The four steps including literature review, analysis the potential of usage water turbine system in Malaysian river, design concept, modeling water turbine system using SolidWork software.

Literature review has been carried out existing water turbine system that can be recommended to be used in Malaysian river. The second step is to analysis the potential of usage water turbine system in Malaysian river based on flow rate of the river which focusing on Sungai Pahang. By third step which is design concept of the water turbine system consist of design geometrical, design parameter, material selection and assembly process that are needed in designing the water turbine system. The fourth step is modeling water turbine system using SolidWork software where as this software show parameter and assembly process of the water turbine system. All of the mentioned steps above are shown in flowchart of methodology in the Figure 3.1.

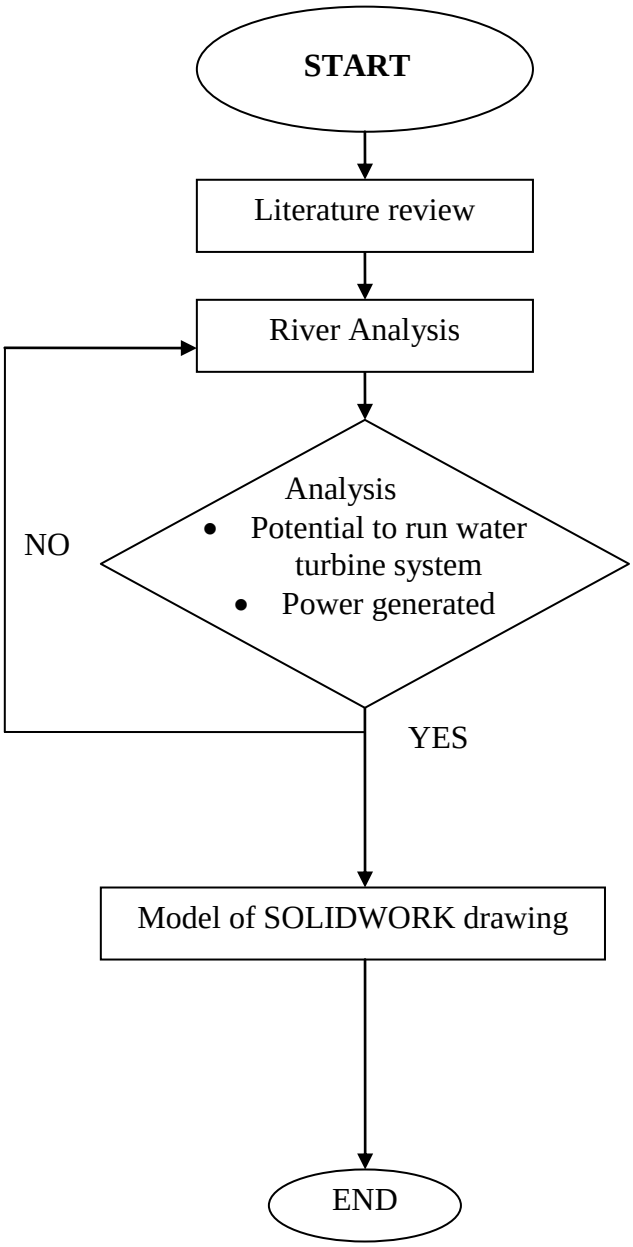

Figure 3.1: Flowchart of methodology.

3.2.1 FIRST STEP: LITERATURE REVIEW

Based on the literature study of the water turbine system, there are several systems to be chosen depending on flow rate condition. The basic mechanism design, flow rate of system, and the suitable turbine blade are the importance information to achieve the desired objectives.

The basic mechanism design of the water turbine system such as turbine blade and rotating shaft from potential energy and generating generator or alternator in water turbine system is very useful to produce power of electricity to be generated. By using those basic mechanisms design of water turbine system the turbine blade can rotates in the vertical direction from lower to higher level of the stream at the river.

The flow rates of river in the water turbine system and the head in a vertical distance are also importance to identify a suitable design parameter of the water turbine system. The h, head difference in elevation or pressure drop across turbine(m), $\dot{V}$ flow rate (m^3/s), ρ density of the water, g acceleration of gravity (9.81 m/s^2) and efficiency of turbine are information parameters in the water turbine system needs to be identified when choosing the components for the water turbine system.

Power available in the stream of water

$$P = \rho . g . h . \dot{V} . \eta \tag{1}$$

Where:

P = Power (J/s or watts)

ρ = Density of water (kg/m^3)

η = Turbine efficiency

h = head difference in elevation(m)

$\dot{V}$ = Flow rate (m^3/s)

3.2.2 SECOND STEP: ANALYSIS ON POTENTIAL OF USAGE WATER TUBINE SYSTEM IN MALAYSIAN RIVER

The analysis the potential of usage water turbine system in Malaysian river, are had been obtain from data that been requested by government body which related on this renewable energy system. Flow rate data are specially requested from Hydrology unit from Jabatan Pengairan dan Saliran Negeri Pahang. Since the data are confidential so this data will be requested directly from head quarters Jabatan Pengairan and Saliran Malaysia at Ampang. The data are consist of full data of flow rate in site Lubuk Paku, Sungai Pahang from January 2010 until July 2010.

3.2.3 THIRD STEP: DESIGN CONCEPT OF THE WATER TURBINE

In the modeling of water turbine system, all parameters and components involve in the water turbine system are selected such as turbine blade, shaft, bearing and generator or alternators. In the moving parts of the water turbine system, mechanisms of turbine blades are involved in the water turbine system. The shaft and holders of bearing are the simplest mechanism of the water turbine system because the system does not trough complex installations system. In SolidWorks all the parts can be decided which material that suitable to be chosen. The example of chosen material is in Figure 3.2 (a) and Figure 3.2 (b).

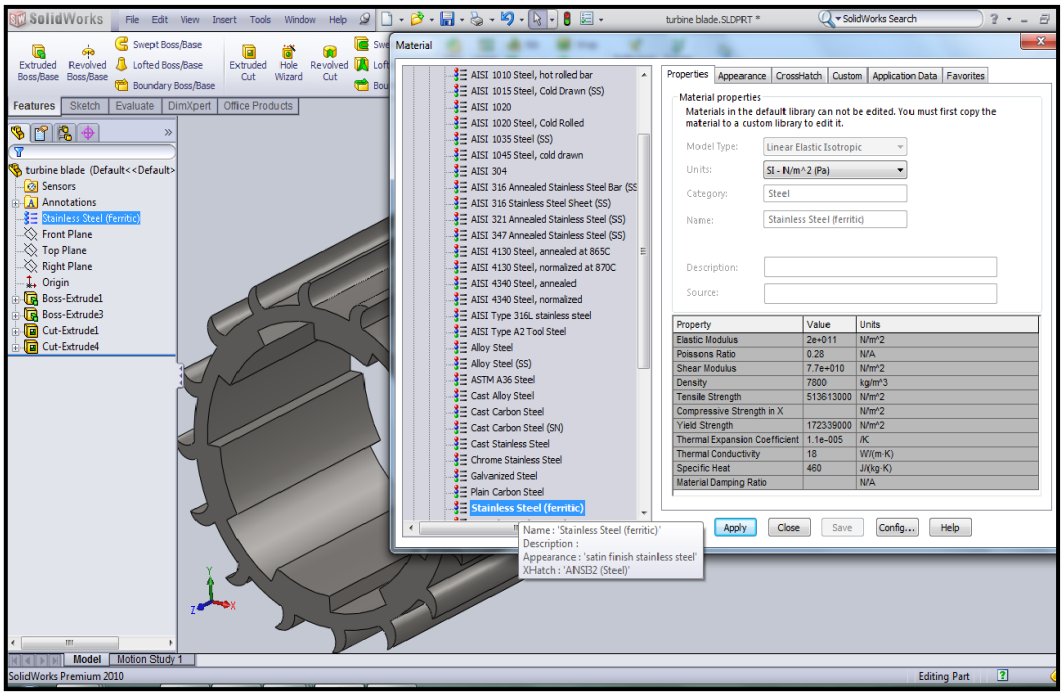

Figure 3.2(a): Selecting material for the Turbine Blade parts

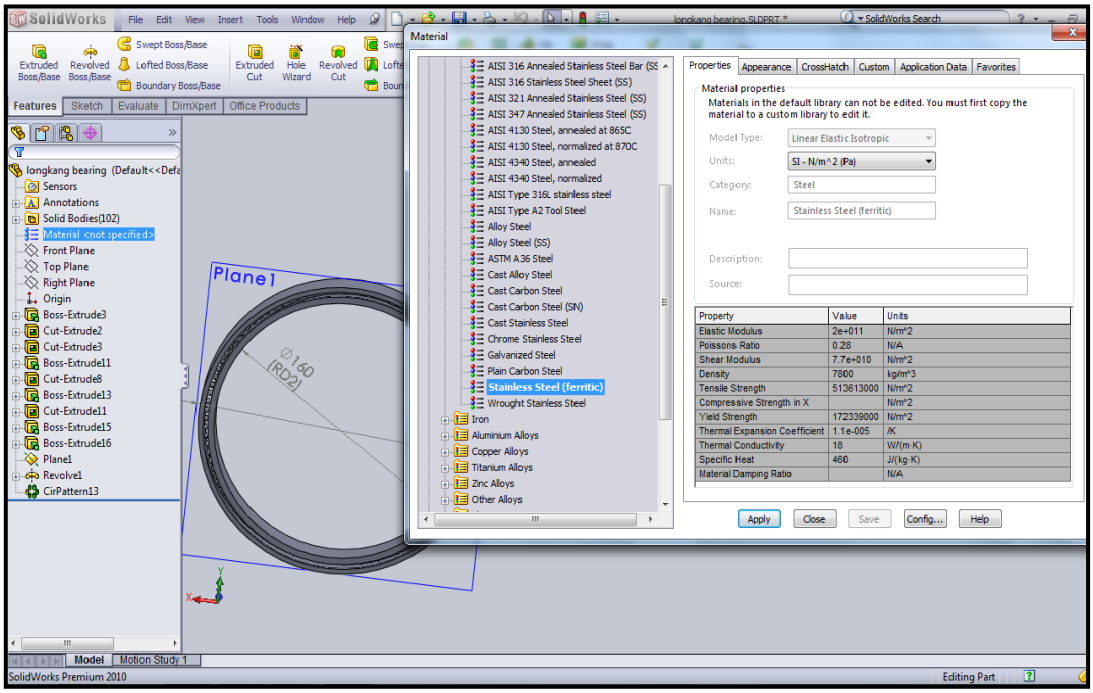

Figure 3.2 (b): Selecting material for the bearing parts

3.2.4 FOURTH STEP: MODELLING WATER TURBINE SYSTEM USING SOLIDWORK SOFTWARE.

In the modeling of water turbine system, all parameters and components involve in the water turbine system are selected such as turbine blade, shaft, bearing and generator or alternators. In the moving parts of the water turbine system, mechanisms of turbine blades are involved in the water turbine system. The shaft and holders of bearing are the simplest mechanism of the water turbine system because the system does not trough complex installations system.

After finished selecting the suitable component, the next step is generating the entire related component in computer by using SolidWork. This SolidWork is computer added mechanical design software. This software is choose because of it capability for designer to sketch idea of the design in three-dimensional models and can produce detail technical drawing. Besides that, by using this software it enables user to design much faster and precise.

SolidWork designs of the component are based on 3D design. To make the design of the water turbine system must follow several command of design which is sketch, features, and assemblies. The sketching command is about creating the structure of the design by know where to put the dimension of the design in the measurement process of the components design and apply all the relations.

Next are the features and assemblies process. The features process is about selecting the appropriate features for each component and determines the best features that could be apply. Then the assemblies' process is about selecting the component and assemble by mate surface component to another surface component by identifying the type of mate that should be applied. The assembly of the part involve shown in the Figure 3.3.

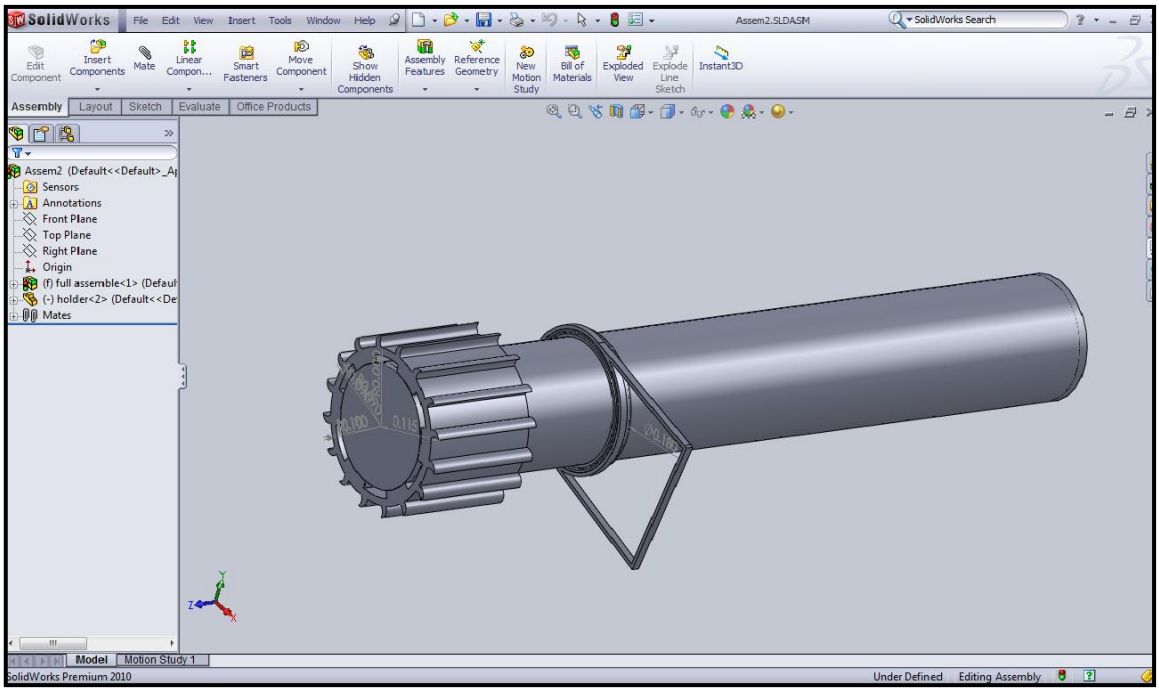

Figure 3.3: Assembly of the water turbine system.

CHAPTER 4

RESULT AND DISCUSSION

4.1 INTRODUCTION

The purpose of this chapter is to provide the further discussion from the analysis of the river in Malaysia (focusing Sungai Pahang) and design of the water turbine system. The analysis of the river in Malaysia (focusing Sungai Pahang) is obtained from reading of each day in every month.

4.2 ANALYSIS OF FLOW RATE

The data are proven and obtain by Jabatan Pengairan dan Saliran Negeri Pahang (JPS) which is contain flow rate meter cube per second for each 24 hour period beginning at midnight each day. This data are collected at Sungai Pahang site at Lubok Paku, Pahang.

4.2.1 The Graph of Flow Rate.

The maximum and minimum are shown for each of the graph which obtain by January to July.

From Figure 4.0 (a), the graph are showing full data of Flow Rate in January which the maximum value are 1002.3 m^3/s meanwhile 342.7m^3/s are the minimum value that being obtain for this month. Mean reading for this month is 609.4 m^3/s

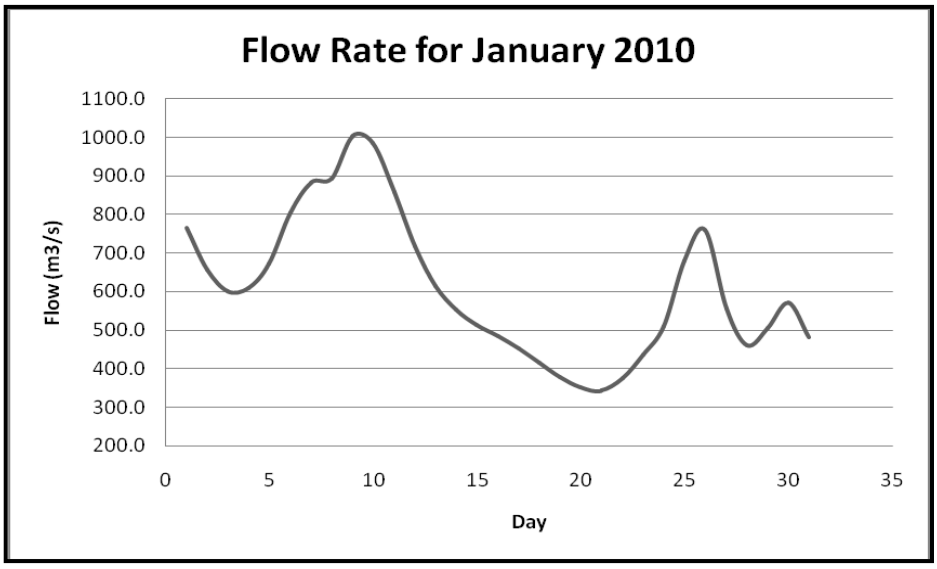

Figure 4.0 (a): Flow Rate in January

From Figure 4.0 (b), the graph are showing full data of Flow Rate in February which the maximum value are 404.3 m^3/s meanwhile 196.1 m^3/s are the minimum value that being obtain for this month. Mean reading for this month is 260.8 m^3/s

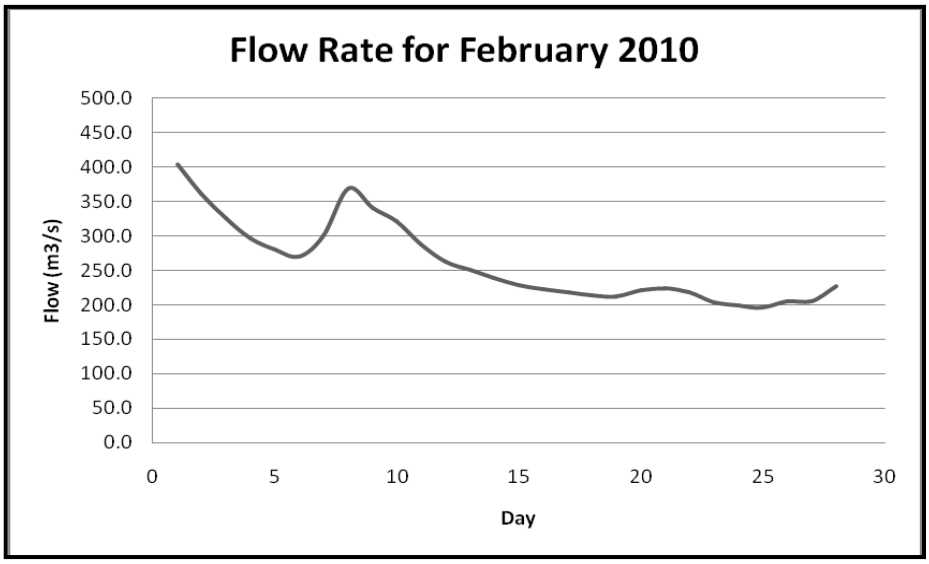

Figure 4.0 (b): Flow Rate in February

From Figure 4.0 (c), the graph are showing full data of Flow Rate in March which the maximum value are 432.2 m^3/s meanwhile 169.7 m^3/s are the minimum value that being obtain for this month. Mean reading for this month is 215.8 m^3/s

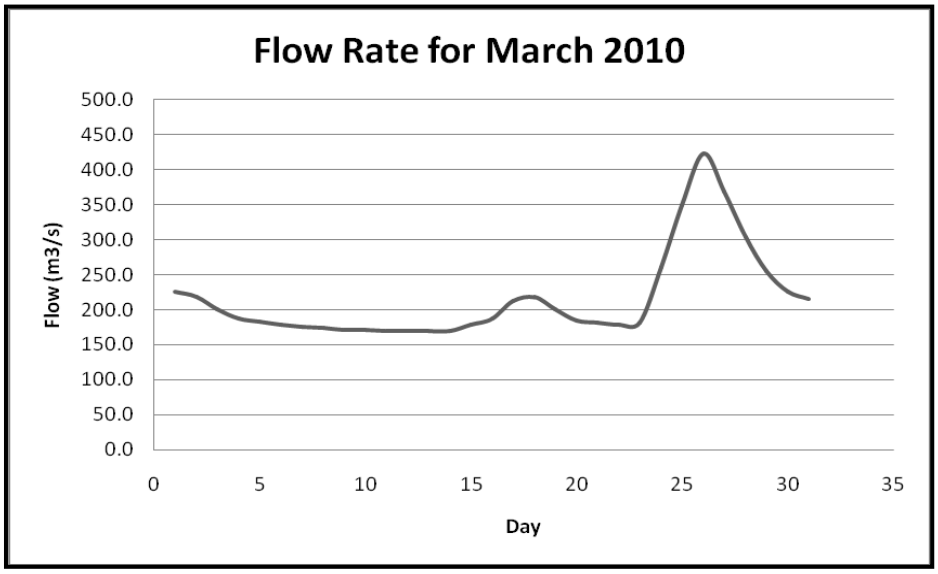

Figure 4.0 (c): Flow Rate in March

From Figure 4.0 (d), the graph are showing full data of Flow Rate in April which the maximum value are 583.2 m^3/s meanwhile 233.8 m^3/s are the minimum value that being obtain for this month. Mean reading for this month is 334.4 m^3/s

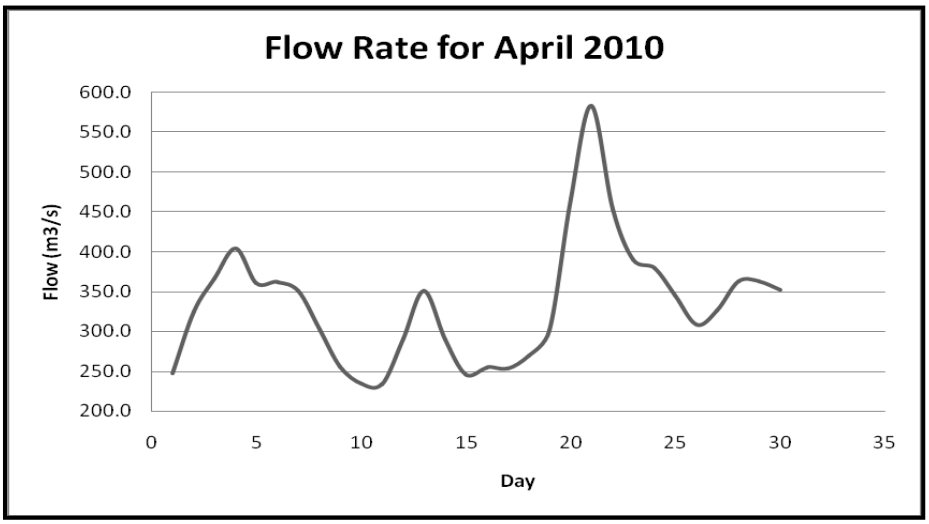

Figure 4.0 (d): Flow Rate in April

From Figure 4.0 (e), the graph are showing full data of Flow Rate in May which the maximum value are 734.4 m^3/s meanwhile 221.9 m^3/s are the minimum value that being obtain for this month. Mean reading for this month is 496.3 m^3/s

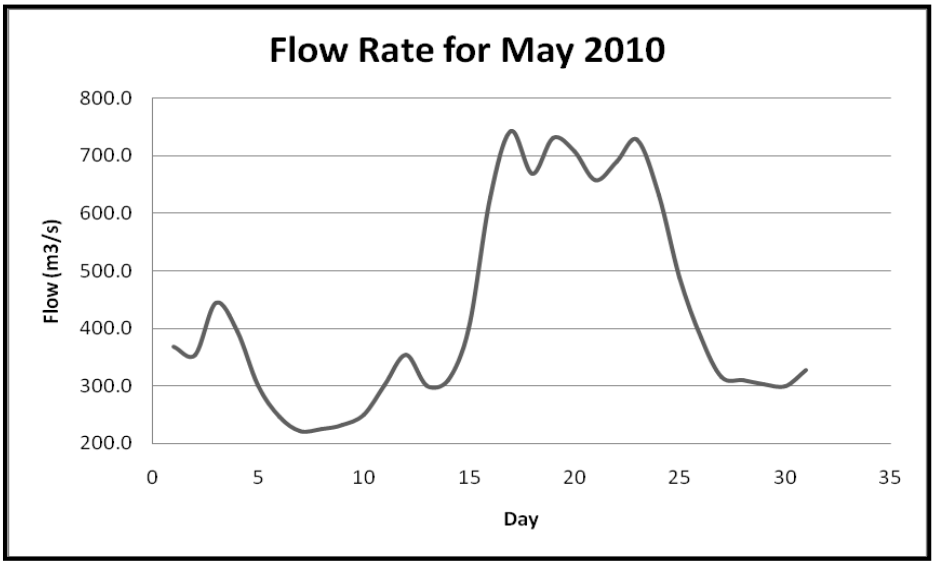

Figure 4.0 (e): Flow Rate in May

From Figure 4.0 (f), the graph are showing full data of Flow Rate in June which the maximum value are 735.2 m^3/s meanwhile 230.2 m^3/s are the minimum value that being obtain for this month. Mean reading for this month is 496.3 m^3/s

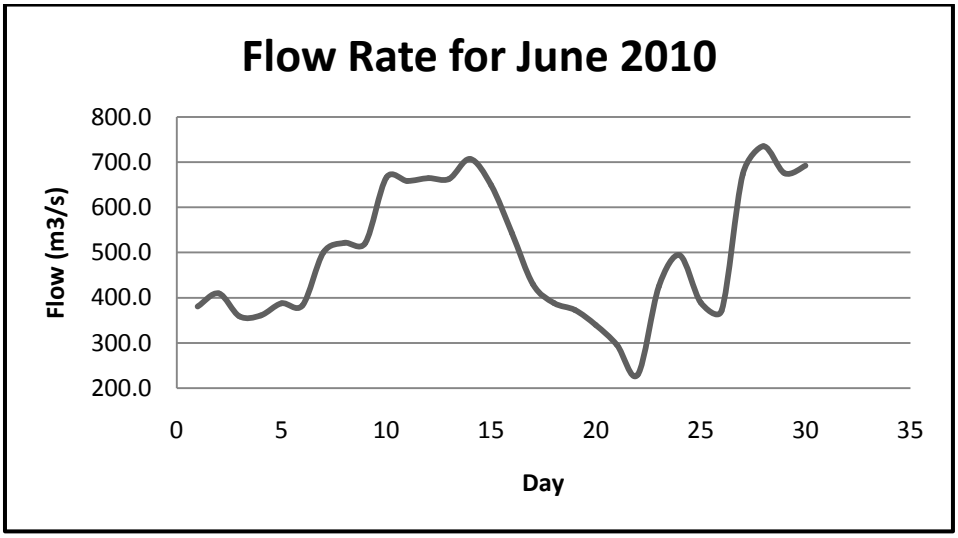

Figure 4.0 (f): Flow Rate in June

From Figure 4.0 (g), the graph are showing full data of Flow Rate in July which the maximum value are 1065.0 m^3/s meanwhile 371.3 m^3/s are the minimum value that being obtain for this month. Mean reading for this month is 604.4 m^3/s

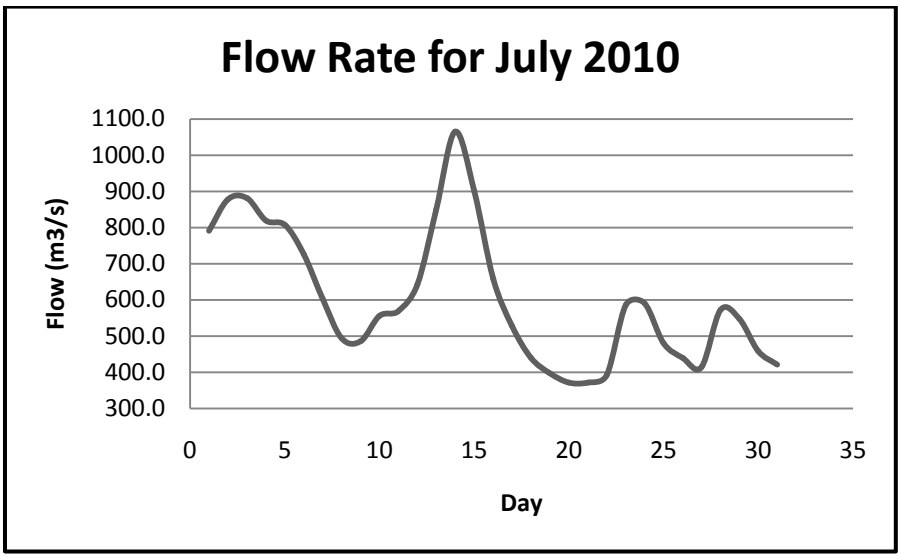

Figure 4.0 (g): Flow Rate in July

4.2.2 Conclusion on Flow Rate Analysis

In the analysis, the average value of minimum reading are 252.24 m^3/s which is quite high value to running a water turbine system. For average of maximum value for 7 month are 708.09 m^3/s meanwhile average of mean value are 421.44 m^3/s. So from the result that being obtain, we could concluded that Sungai Pahang having a potential to run a water turbine system as one of alternative electrical sources.

4.3 CALCULATION FOR STREAM FLOW

By using formula of Power available in the stream of water, we can choose either head difference in elevation (m) or flow rate (m^3/s) as a constant value to show the factor of each parameter that could affect power generated reading.

$$P = \rho . g . h . \dot{V} . \eta$$

Where:

P = Power (J/s or watts)

ρ = Density of water (kg/m^3)

η = Turbine efficiency

h = head difference in elevation (m)

$\dot{V}$ = Flow rate (m^3/s)

For the ρ Density of water (kg/m^3) we could assume ad normal density of water which is 1000 kg/m^3 meanwhile since the turbine to be chosen in Banki Turbine, we can conclude as 0.45 as the efficiency and $g = 9.81\ m/s^2$.

4.3.1. Head Difference in Elevation (m) Factors

From the flow rate data, the average mean values of overall data are 421.44m^3/s.

To show differences in value of different available head, 3 readings of head difference in elevation to be taken which is$h_1 = 1\ meter$, $h_2 = 2\ meter$ and$h_3 = 3\ meter$.

4.3.1.1 Power Calculation Head Difference in Elevation (m) Factors

$\boldsymbol{h_1 = 1\ meter}$

$P = \rho . g . h . \dot{V} . \eta$

$P = (1000\, kg/m^3)(9.81\ \ m/s^2)(0.45)(421.44\, m^3/s)(1m)$

$P = 1860.45\, W$

$\boldsymbol{h_2 = 2\ meter}$

$P = \rho . g . h . \dot{V} . \eta$

$P = (1000\, kg/m^3)(9.81\ \ m/s^2)(0.45)(421.44\, m^3/s)(2m)$

$P = 3720.89\ W$

$\boldsymbol{h_3 = 3\ meter}$

$P = \rho . g . h . \dot{V} . \eta$

$P = (1000\ kg/m^3)(9.81\ \ m/s^2)(0.45)(421.44\ m^3/s)(3m)$

$P = 5581.34\ W$

Table 4.1 : Head Difference in Elevation (m) with Power Produced (W)

Head Difference in Elevation (m)	**1**	**2**	**3**
Power Produced (W)	1860.45	3720.89	5581.34

From Figure 4.1, we could conclude that Head Difference in Elevation (m) are proportionally to Power Produced in (W) if the flow rate are constant. So one of modification can be done to the water turbine system are through adjusting the height of Head Difference in Elevation (m). By adjusting Head Difference in Elevation (m) we could increase the efficiency of water turbine system for better performance to generated electricity.

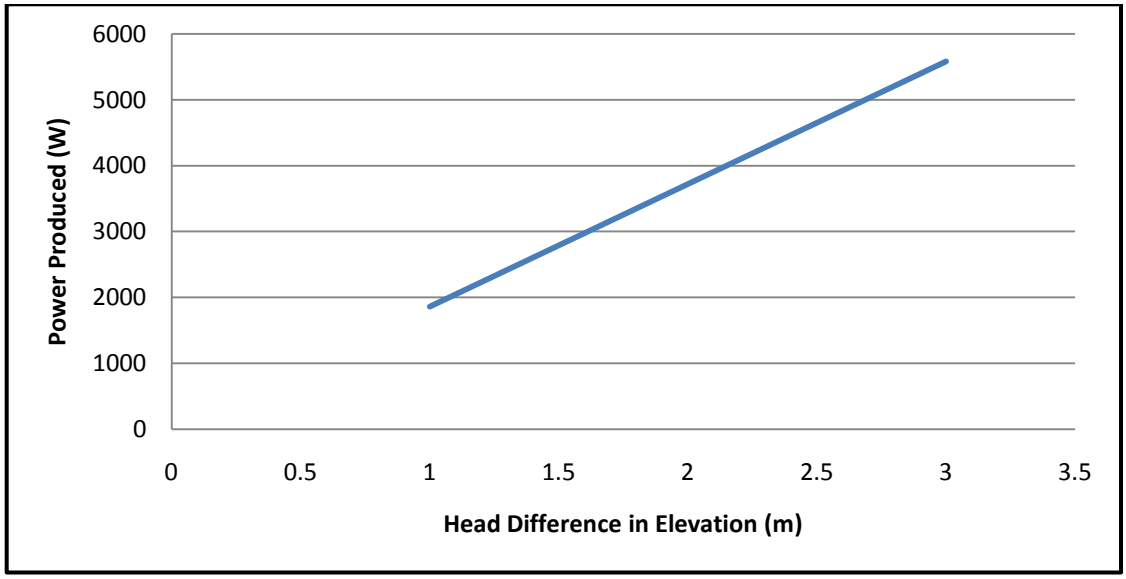

Figure 4.1: Graph of Power Produced (W) against Head Difference in Elevation (m)

4.3.2. Flow Rate (m^3/s) Factors

By using same method in calculations in Head Difference in Elevation (m) Factors, stick with 3 constant value of Head Difference in Elevation (m) with $h_1 = 1\ meter$, $h_2 = 2\ meter$ and $h_3 = 3\ meter$. But in this calculation we taken average of mean Flow Rate (m^3/s) for each month starting January until July as dependent value.

4.3.2.1 Calculation of Flow Rate (m^3/s) Factors

Example calculation For $h_1 = 1\ meter$

In **January**, $\dot{V} = 609.4\ kg/m^3$

$P = \rho.g.h.\dot{V}.\eta$
$P = (1000\,kg/m^3)(9.81\ \ m/s^2)(0.45)(609.4\,m^3/s)(1m)$
$P = 2690.2\,W$

In **February**, $\dot{V} = 260.8\ kg/m^3$

$P = \rho.g.h.\dot{V}.\eta$
$P = (1000\,kg/m^3)(9.81\ \ m/s^2)(0.45)(260.8\,m^3/s)(1m)$
$P = 1151.3\,W$

In **March**, $\dot{V} = 215.8\ kg/m^3$

$P = \rho.g.h.\dot{V}.\eta$
$P = (1000\,kg/m^3)(9.81\ \ m/s^2)(0.45)(215.8\,m^3/s)(1m)$
$P = 952.65\,W$

In **April**, $\dot{V} = 334.4\ kg/m^3$
$P = \rho.g.h.\dot{V}.\eta$
$P = (1000\,kg/m^3)(9.81\ \ m/s^2)(0.45)(334.4\,m^3/s)(1m)$

$P = 1476.2\ W$

In **May**, $\dot{V} = 429.0\ kg/m^3$

$P = \rho.g.h.\dot{V}.\eta$
$P = (1000\,kg/m^3)(9.81\ \ m/s^2)(0.45)(429.0\,m^3/s)(1m)$
$P = 1893.82\ W$

In **June**, $\dot{V} = 496.3\ kg/m^3$

$P = \rho.g.h.\dot{V}.\eta$
$P = (1000\,kg/m^3)(9.81\ \ m/s^2)(0.45)(496.3\,m^3/s)(1m)$
$P = 2190.9\ W$

In **July**, $\dot{V} = 604.4\ kg/m^3$

$P = \rho.g.h.\dot{V}.\eta$
$P = (1000\,kg/m^3)(9.81\ \ m/s^2)(0.45)(604.4\,m^3/s)(1m)$
$P = 2668.1\ W$

Table 4.2 : Head Difference in Elevation (m) with Power Produced (kW) for each month

	$\boldsymbol{h_1 = 1\ meter}$	$\boldsymbol{h_2 = 2\ meter}$	$\boldsymbol{h_3 = 3\ meter}$
January	2690.2	5380.4	8070.6
February	1151.3	2302.6	3453.9
March	952.65	1905.3	2857.9
April	1476.2	2952.4	4428.6
May	1893.82	3787.6	5681.5
June	2190.9	4381.8	6572.7
July	2668.1	5336.2	8004.4

(all value obtain in $\boldsymbol{W}$)

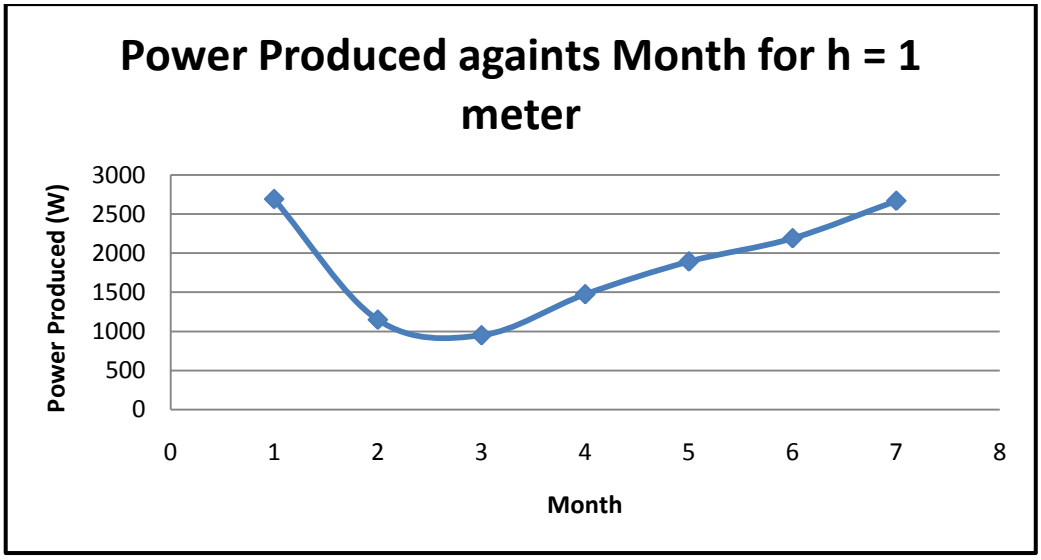

Figure 4.2 (a): Power Produced per each Month for $h_1 = 1\ meter$

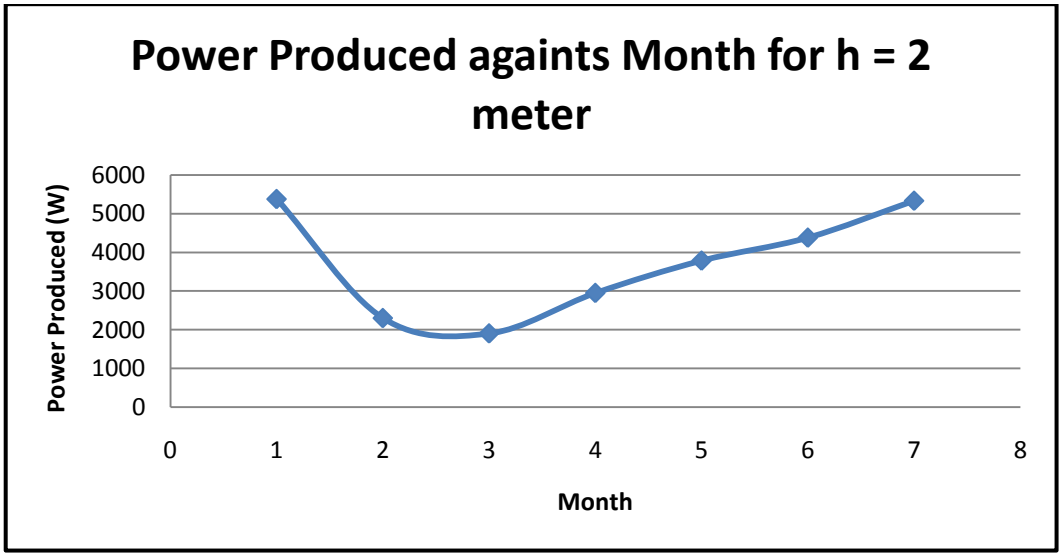

Figure 4.2 (b): Power Produced per each Month for $h_2 = 2\ meter$

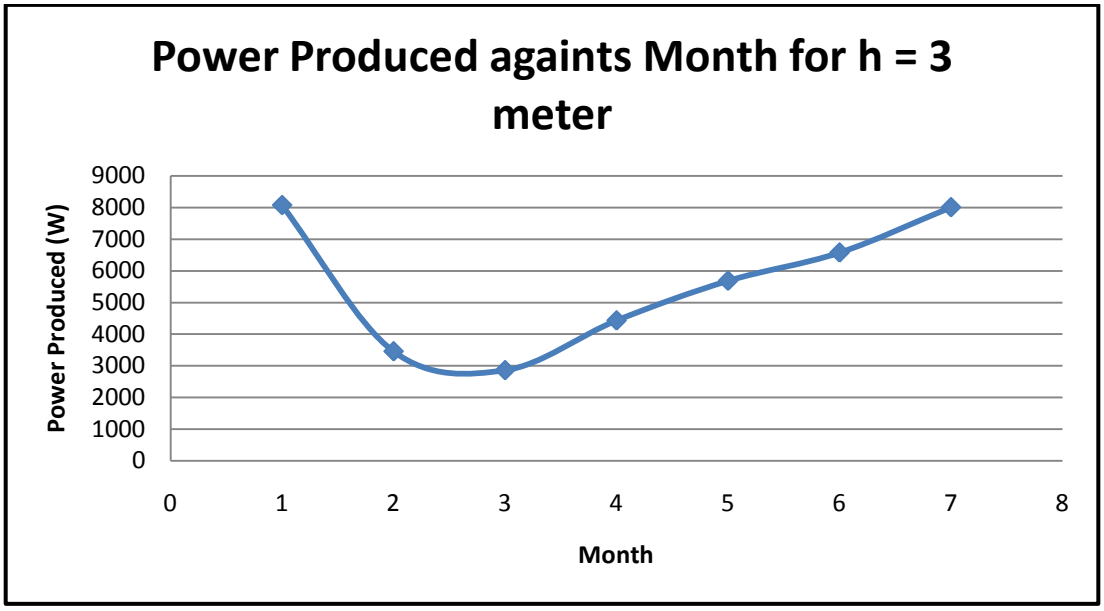

Figure 4.2 (c): Power Produced per each Month for $h_3 = 3\ meter$

4.4 MODELING ON WATER TURBINE SYSTEM

By using SolidWorks, the modeling of water turbine system can completely be done with based on suitable dimension and material to be chosen to varied and suitable for condition of river in Malaysia.

4.4.1. Turbine Blade

The reason of Banki Turbine Blade to be chosen is because these types of water turbine blade are one of most suitable blade for stream Flow River. If considering the cost of fabricating, Banki turbine is cheaper than other turbine system that available. By this turbine blade are easier to constructed and fabricated

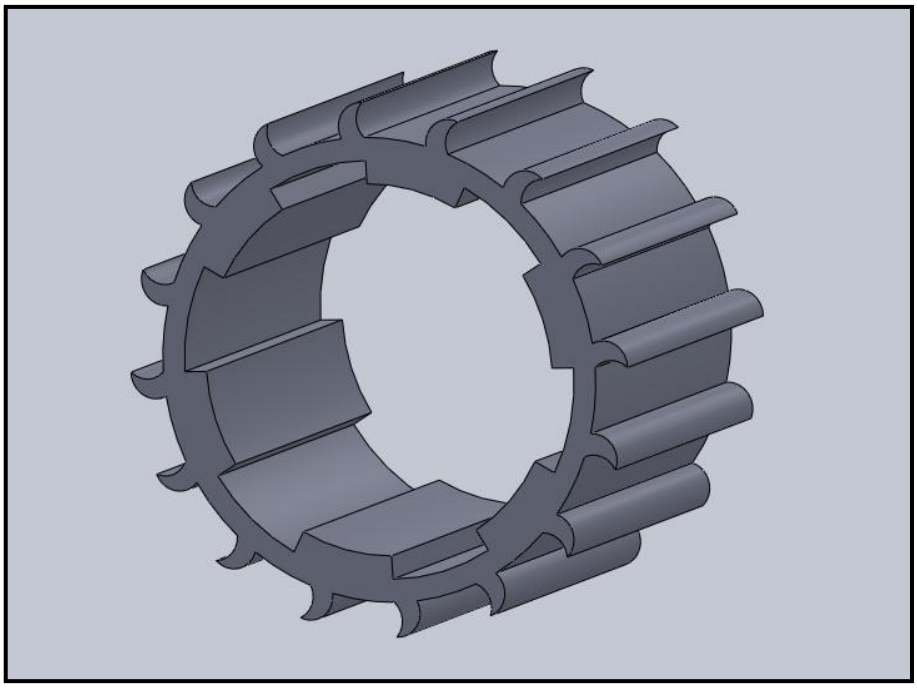

Figure 4.3(a): SolidWorks design for Turbine Blade part.

4.4.2. Shaft Rod

Shaft rod is one of main part in water turbine system, since shaft is the part that connected turbine blade and rotating alternator or generator. By rotating shaft rod which is transferred through potential energy from river flow rate onto turbine blade, it will directly rotated the alternator or generator which could generated electricity to be used or to be stored in battery,

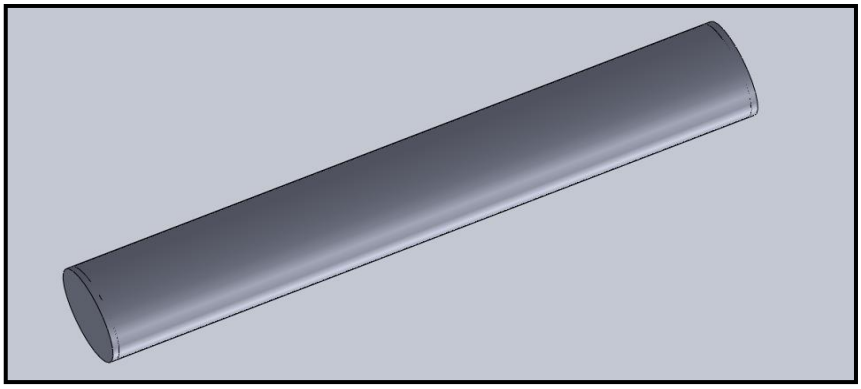

Figure 4.3(b): SolidWorks design for shaft rod part.

4.4.3. Bearing

A bearing is a device to allow constrained relative motion between two or more parts, typically rotation or linear movement. Bearings may be classified broadly according to the motions they allow and according to their principle of operation as well as by the directions of applied loads they can handle. So bearing will be combined with water turbine holder so that the shaft will be rotating smoothly even though there are a holder will holding the rotating part of rod shaft.

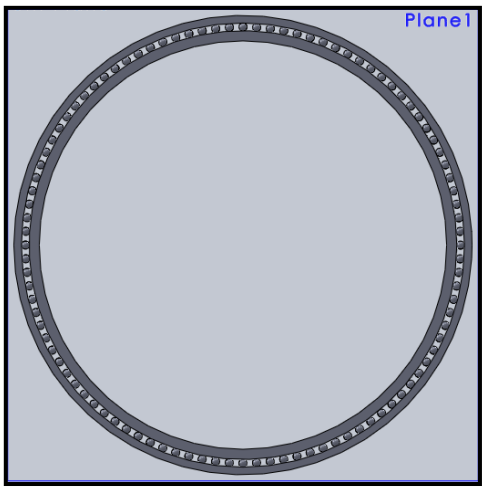

Figure 4.3(c): SolidWorks design for Bearing part.

4.4.4. Holder

Holder is the part that will holding at centre of turbine blade and generator or alternator. Holder will lock and holding with bearing system so that the efficiency of rotating shaft rod will not affected. Holder are also as the part that will holding water turbine blade and shaft rod to avoiding from shaking and avoid from collapse which directly will cause water turbine system destructed.

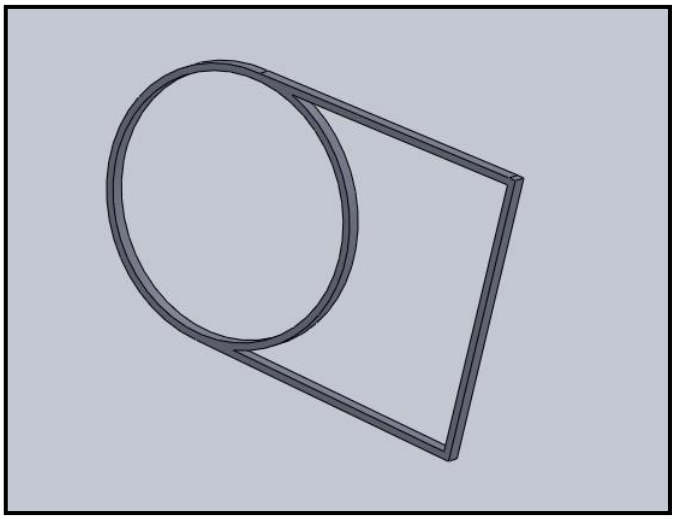

Figure 4.3(d): SolidWorks design for holder part

4.4.5. Final Assembly of Water Turbine System design

After each part completely design and constructed, all parts will be assemble exactly same in Figure 4.3(e) which the turbine blade are placed on the left end. This part will directly confronted with stream river flow that will directly rotates the turbine blade. On the other end is the placed of alternators or generators that will rotated directly proportional to the rotating shaft rod.

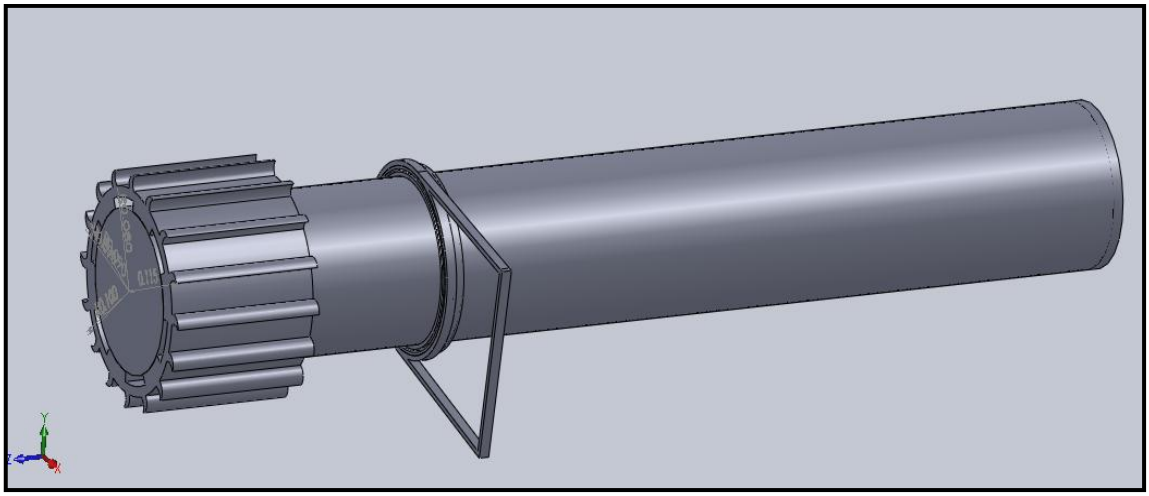

Figure 4.3(e): Final assemble in SolidWorks design for Water turbine system

CHAPTER 5

CONCLUSION AND RECOMMANDATION

5.1 INTRODUCTION

This water turbine system was designed to obtain electricity by running this system. This is because by water turbine system could manage to generated electricity from renewable energy which cheap, clean and friendly to environment. From the analysis of Flow Rate data that received by JPS Ampang, Kuala Lumpur, there are lots of potential to run water turbine system at Sungai Pahang.

5.2 WATER TURBINE SYSTEM

This design model was generating electricity by rotating turbine that rotates by potential energy from downstream flow of river. By adapting this design to gaining electricity could also avoided pollution. Based on analysis and investigation we can concluded that Pahang River have a big potential to run a water turbine system.

The final modification of Water Turbine Systems which is using Banki Blade turbine can be modeled by using SolidWorks software.

5.3 RECOMMENDATION

The analysis of river could be expanded not just on Pahang River only but also covering all rivers in Malaysia. To obtain more persistence data, the data should be not just covering data from January to July only because we could not obtain river flow rate

especially in raining season which could cause flood and could raise the water depth which directly could affected Flow Rate data.

The water turbine system should have capability of producing electricity efficiently by done some modification to presented design. Since these water turbine systems are just can be used at area of downstream river. Maybe by some modification can be done so that the water turbine can be used at free flow river or by using tidal concept. Therefore, the water turbine system can be used in personally used or commercially used.

The water turbine system will exposed to the risk of corrosion especially at mechanical part, by that the water turbine system can improve by fabricated with stainless steel material or can be replaced by fiber material.

REFERENCES

Agar, M. R. (2007). Renewable Energy. *On the use of a laboratory-scale Pelton wheel water turbine in renewable energy education* .

In Seong Hwang, Lee, Y. H., Kim .S. J. (2009). Applied Energy. *Optimization of cycloidal water turbine and the performance improvement by individual blade control* .

Johansson, B.T**.,** Kelly, H.**,** Amulya K.N., Williams, R., (1993) Renewable Energy: sources for fuels and electricity. *Hydropower and its Constraints*: 70-92.

Kaltschmitt, M., Streicher, W., Wiese, A.(2007). Renewable Energy: Technology, Economics and Environment. *Hydroelectric Power Generation*:351-368.

Lombart. M. (2010), SolidWorks 2010 Bible.

Masters, G. M. (2004). *Renewable and Efficient Electric Power Systems.*

Neil Petchers. (2002), Combined heating, cooling, and power handbook & Technologies Application, *Renewable and Alternative Power Energy*: 275-285**.**

Reynolds, T.S. (1983). Stronger than a hundred man. *A History of Vertical Water Wheel*: 331-343

Solway, A. (2007). Water Power.

Sørensen, B. (2004). Renewable energy: its Physics, Engineering, Use, Environmental Impacts, Economy and Planning Aspect. *River Flows, Hydeopower and Elevated Water Storage*: 267-270.

Weissenbacher.M. (2009). Sources of Power. *Control Engineering Practice*: 224-225.

Weissenbacher.M. (2009). Sources of Power. *How Energy Forges Human History*: 224-225.

Wengenmayr, R., Bührke, T. (2008)**.** Renewable Energy: Sustainable Energy Concepts for the Future**.** The Development: Renewable Energy on the Rise: 4-13.

William, D. W. (2003). *Energy studies.* Imperial College Press.

Zanette, J. D. Imbault, A. Tourabi. (2010). Renewable Energy. *A design methodology for cross flow water turbines* .

APPENDIX A

Gantt Chart for Final Year Project 1

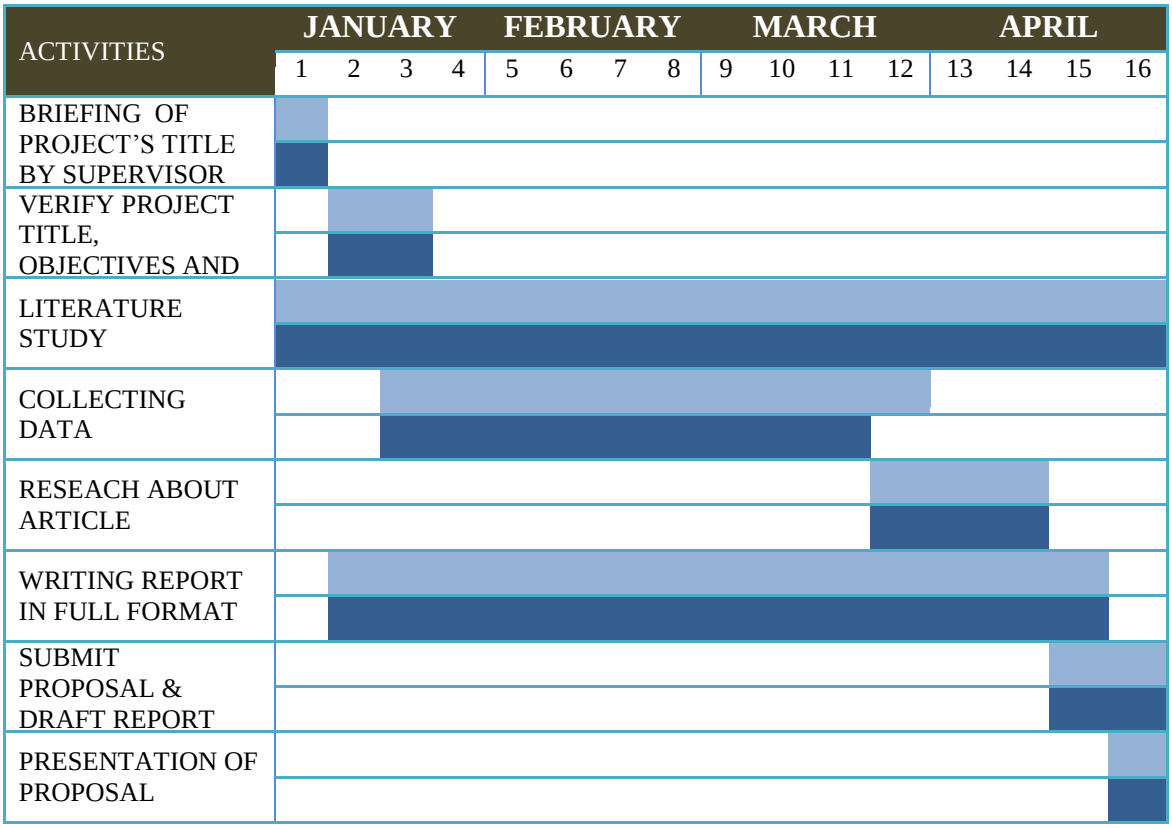

Planning progress

Actual progress

APPENDIX B

Gantt Chart for Final Year Project 2

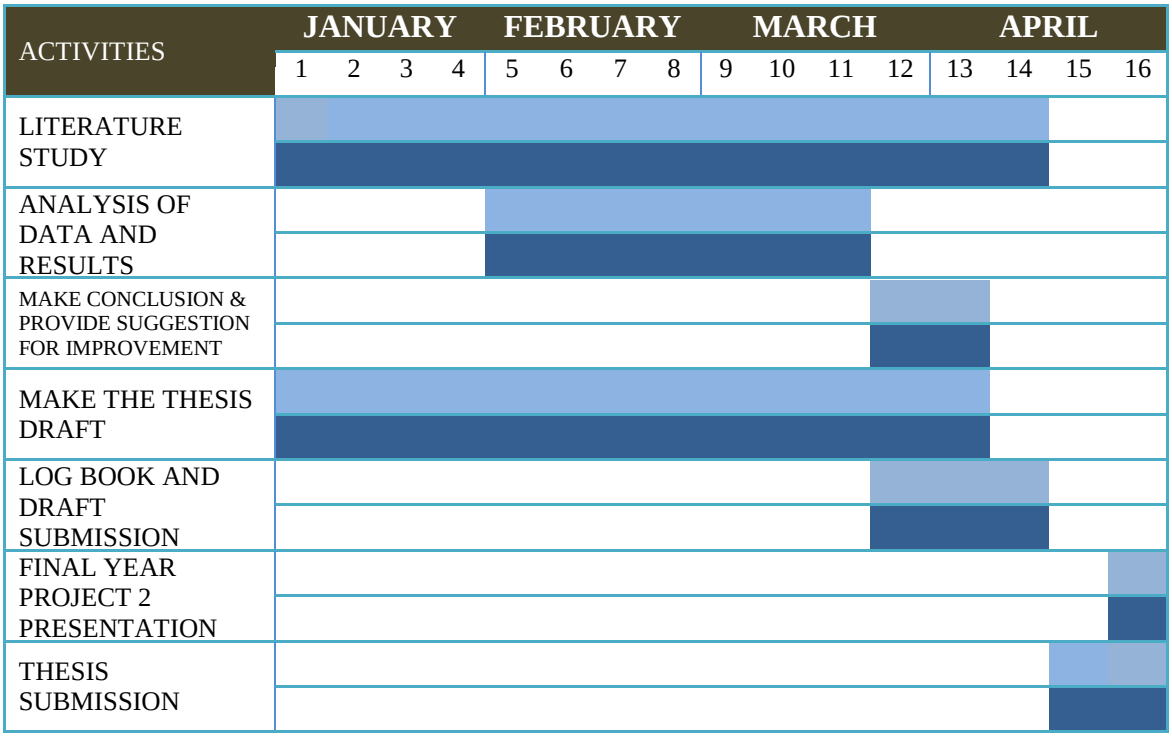

Planning progress

Actual progress

APPENDIX C

River Volume Flow Rate (m^3/s) data from Jabatan Pengairan dan Saliran Malaysia

Day	Jan	Feb	Mar	Apr	May	Jun	Jul	Aug	
1	763.9	404.3	225.0	247.8	368.4	380.6	791.3	463.0	
2	657.2	361.5	218.6	324.9	353.4	409.5	877.9	537.1	
3	600.7	325.7	200.3	366.6	443.5	358.9	881.6	?	
4	609.7	297.0	187.4	404.2	395.2	360.9	819.5	?	
5	671.6	280.1	183.0	360.3	300.3	388.1	807.4	?	
6	805.8	270.5	178.6	362.0	247.0	383.5	726.3	?	
7	883.0	300.0	175.5	350.6	221.9	500.5	603.1	?	
8	893.4	368.6	173.4	303.3	225.9	521.9	494.1	?	
9	1002.3	341.1	171.1	256.0	232.1	521.4	486.0	?	
10	984.1	321.1	171.1	234.0	250.5	666.2	556.2	?	
11	857.3	287.6	170.0	233.8	301.4	658.1	569.3	?	
12	717.6	261.7	169.7	291.2	354.0	664.8	642.1	?	
13	615.1	250.1	169.7	351.3	300.7	663.0	850.1	?	
14	552.3	239.0	169.8	289.7	310.8	707.1	1065.0	?	
15	512.7	228.7	178.8	245.8	399.3	648.9	899.3	?	
16	484.6	223.0	186.7	254.9	627.6	542.7	658.6	?	
17	453.3	218.8	212.6	253.7	743.4	429.5	527.7	?	
18	415.3	214.3	218.1	270.1	669.1	388.3	439.5	?	
19	378.7	212.3	200.2	301.5	731.0	372.8	397.1	?	
20	351.8	220.5	184.4	466.8	707.1	340.0	371.3	?	
21	342.7	223.8	181.5	583.2	658.2	296.0	371.3	?	
22	374.8	217.6	178.5	454.0	689.8	230.2	392.4	?	
23	437.5	204.2	181.4	389.8	727.5	425.1	585.3	?	
24	511.1	198.5	261.4	379.5	632.4	494.0	590.5	?	
25	680.6	196.1	349.9	345.3	488.2	389.0	480.2	?	
26	759.1	204.6	423.2	308.3	383.4	371.6	439.4	?	
27	554.9	205.2	368.6	325.9	315.3	673.1	414.5	?	
28	461.1	226.9	303.7	362.4	310.1	735.2	572.4	?	
29	505.8		255.0	362.8	302.5	675.5	548.0	?	
30	571.6		226.2	352.2	299.1	692.1	458.3	?	
31	482.3		215.2		326.8		421.5	?	
Min	342.7	196.1	169.7	233.8	221.9	230.2	371.3	463.0	169.7
Mean	609.4	260.8	215.8	334.4	429.0	496.3	604.4	500.0	424.5
Max	1002.3	404.3	432.2	583.2	734.4	735.2	1065.0	537.1	1065.0

APPENDIX D

Calculation For $h_2 = 2\ meter$

In **January**, $\dot{V} = 609.4\ kg/m^3$

$P = \rho.g.h.\dot{V}.\eta$

$P = (1000\ kg/m^3)(9.81\ \ m/s^2)(0.45)(609.4\ m^3/s)(2m)$

$P = 5380.4\ kW$

In **February**, $\dot{V} = 260.8\ kg/m^3$

$P = \rho.g.h.\dot{V}.\eta$

$P = (1000\ kg/m^3)(9.81\ \ m/s^2)(0.45)(260.8\ m^3/s)(2m)$

$P = 2302.6\ kW$

In **March**, $\dot{V} = 215.8\ kg/m^3$

$P = \rho.g.h.\dot{V}.\eta$

$P = (1000\ kg/m^3)(9.81\ \ m/s^2)(0.45)(215.8\ m^3/s)(2m)$

$P = 1905.3\ kW$

In **April**, $\dot{V} = 334.4\ kg/m^3$

$P = \rho.g.h.\dot{V}.\eta$

$P = (1000\ kg/m^3)(9.81\ \ m/s^2)(0.45)(334.4\ m^3/s)(2m)$

$P = 2952.4\ kW$

In **May**, $\dot{V} = 429.0\ kg/m^3$

$P = \rho.g.h.\dot{V}.\eta$

$P = (1000\,kg/m^3)(9.81\ \ m/s^2)(0.45)(429.0\,m^3/s)(2m)$

$P = 3787.6\,kW$

In **June**, $\dot{V} = 496.3\ kg/m^3$

$P = \rho.g.h.\dot{V}.\eta$

$P = (1000\,kg/m^3)(9.81\ \ m/s^2)(0.45)(496.3\,m^3/s)(2m)$

$P = 4381.8\,kW$

In **July**, $\dot{V} = 604.4\ kg/m^3$

$P = \rho.g.h.\dot{V}.\eta$

$P = (1000\,kg/m^3)(9.81\ \ m/s^2)(0.45)(604.4\,m^3/s)(2m)$

$P = 5336.2\,kW$

APPENDIX E

Calculation For $h_3 = 3\ meter$

In **January**, $\dot{V} = 609.4\ kg/m^3$

$P = \rho.g.h.\dot{V}.\eta$

$P = (1000\ kg/m^3)(9.81\ \ m/s^2)(0.45)(609.4\ m^3/s)(3m)$

$P = 8070.6\ kW$

In **February**, $\dot{V} = 260.8\ kg/m^3$

$P = \rho.g.h.\dot{V}.\eta$

$P = (1000\ kg/m^3)(9.81\ \ m/s^2)(0.45)(260.8\ m^3/s)(3m)$

$P = 3453.9\ kW$

In **March**, $\dot{V} = 215.8\ kg/m^3$

$P = \rho.g.h.\dot{V}.\eta$

$P = (1000\ kg/m^3)(9.81\ \ m/s^2)(0.45)(215.8\ m^3/s)(3m)$

$P = 2857.9\ kW$

In **April**, $\dot{V} = 334.4\ kg/m^3$

$P = \rho.g.h.\dot{V}.\eta$

$P = (1000\ kg/m^3)(9.81\ \ m/s^2)(0.45)(334.4\ m^3/s)(3m)$

$P = 4428.6\ kW$

In **May**, $\dot{V} = 429.0\ kg/m^3$

$P = \rho.g.h.\dot{V}.\eta$

$P = (1000\,kg/m^3)(9.81\ \ m/s^2)(0.45)(429.0\,m^3/s)(3m)$

$P = 1893.82\,kW$

In **June**, $\dot{V} = 5681.5\ kg/m^3$

$P = \rho.g.h.\dot{V}.\eta$

$P = (1000\,kg/m^3)(9.81\ \ m/s^2)(0.45)(496.3\,m^3/s)(3m)$

$P = 6572.7\,kW$

In **July**, $\dot{V} = 604.4\ kg/m^3$

$P = \rho.g.h.\dot{V}.\eta$

$P = (1000\,kg/m^3)(9.81\ \ m/s^2)(0.45)(604.4\,m^3/s)(3m)$

$P = 8004.4\,kW$