DEVELOPMENT OF A STORAGE BENDING TOOLS CABINET

ABD RAHMAN FAHMI BIN MAT HASAN

A report submitted in partial fulfilment of the requirements
For the award of the
Diploma of Mechanical Engineering

Faculty of Mechanical Engineering
UNIVERSITI MALAYSIA PAHANG

JUNE 2008

SUPERVISOR DECLARATION

"I declare that I have read this thesis and in my opinion, this report is enough to fulfilled the purpose for the award for the Diploma of Mechanical Engineering from the aspects of scope and quality."

Signature : ……
Supervisor : EN HAZAMI B CHE HUSSAIN
Date : …..OCTOBER 2008

DECLARATION

I declare that this report entitled “Design and fabricate storage bending tools cabinet” is the results of my own work and research. The report has not been degree and is not concurrently submitted in candidature of any other degree.

SIGNATURE: ……..
NAME : ABD RAHMAN FAHMI BIN MAT HASAN
ID NUMBER: MB06078
DATE : ……OCTOBER 2008

ACKNOWLEDGEMENT

I would like to express my gratitude and appreciation to all those who gave me support and help to complete this report. Special thanks to my supervisor Mr Hazami B Che Hussain for his patience and constructive comments that encourage me to finish this project. His time and effort have been a great contribution can not be forgotten.

I would to thanks to all the staff in mechanical laboratory for their precious comments, sharing idea and knowledge during this project being carried out. I also want acknowledge the assistance of everybody especially students from Diploma of Mechanical Engineering for spending their time in helping me sharing and solve the problem during my hard time in fabricated the project and finishing the report for this final year project. Finally, my profound thanks and gratitude for my family for their continuous support and confidence in my efforts.

ABSTRACT

The idea to create and build a storage bending tools cabinet is come from supervisor that gives me this title and task for this project. To design and fabricated this cabinet, it must be compare with other product that maybe available in the market. First, get an idea from internet, magazine, newspaper or other from available data. Form there the information and idea to design and fabricated can be created.

Whole project involves various methods such as collecting data, concept design and fabrication process. The whole project involved various method and process that usually use in engineering such as concept design, analysis process and lastly fabrication process.

This final year project takes one semester to complete. This project is individual project and must be done within this semester. In this project, students must able apply all knowledge during their studies in this Diploma of Mechanical Engineering course. Overall from this project, time management and discipline is important to make sure this project goes smooth as plan and done at correct time.

ABSTRAK

Idea untuk menghasilkan dan membina **Kabinet simpanan untuk mata alat Bending** ini datang daripada penyelia yang memberi saya tajuk dan tugasan untuk projek ini. Untuk merekaentuk dan menghasilakan kabinet ini, ia hendaklah dibandingkan dengan produk lain yang mungkin berada dalam pasaran. Langkah pertama, dapatkan maklumat daripada internet, majalah, suratkhabar atau daripada sumber yang lain.

Keseluruhan projek melibatkan pelbagai cara atau kaedah seperti mengumpulan data, rekabentuk konsep dan proses membina. Kaedah yang selalu yang digunakan dalam kejuruteraan seperti proses analisis juga digunakan.

Projek akhir tahun ini mengambil satu semester untuk disiapkan. Projek ini adalah projek individu dan mesti disiapkan dalam semester ini. Didalam projek ini, pelajar mesti berupaya menggunakan segala pengetahuan yang mereka perolehi semasa pembelajaran mereka di dalam kursus Diploma Kejuruteraan Mekanikal ini. Secara keseluruhan daripada projek ini, pengurusan masa dan disiplin adalah penting dalam memastikan projek berjalan lancar dan siap tepat pada waktunya.

TABLE OF CONTENT

APPENDIX A-B

LIST OF TABLES

LIST OF FIGURES

LIST OF APPENDICES

CHAPTER 1

INTRODUCTION

1.1 PROJECT SYNOPSIS

The purpose of the project is to design and fabricate storage cabinet for bending tools based on mechanical design method. This cabinet would be different from another cabinet because it specifically designed for storage the bending tools. In this project, the cabinet will be design and fabricate according to customer needs. As the Diploma Final Year project allocates the duration of one semester, this project need combination of knowledge and skills to handle several machine such as bending machine, turret punch machine, welding machine and others.

This project involves the fabrication of storage cabinet with specification regarding the strength, material and cost. With the newly designed and fabricated this table, tests are required to be conducted. Overall, this project will acquire the skills of design fabrication and it really useful especially for FKM lab.

CHAPTER 2

LITERATURE RIVIEW

2.1 INTRODUCTION

Cabinet making is the practice of utilizing various manufacturing skills to create cabinets, shelving and furniture. Cabinet making involves techniques such as creating appropriate joints, shelving systems and the use of finishing tools.

Before the advent of industrial design cabinet makers were responsible for the conception and production of any piece of furniture. In the last of the 18th century, cabinet makers such as Thomas Sheraton, Thomas Chippendale and George Hepplewhite also published books of furniture forms .

With the industrial revolution and the application of steam (through rod and belt devices) and electrical power to cabinet making tools, mass production techniques were gradually applied nearly all aspects of cabinet making, and the traditional cabinet shop ceased to be the main source of furniture, domestic or commercial.

2.2 COMPARISON OF CURRENT PRODUCT

In this project, 3 current design of cabinet from market are selected to make the comparison.

2.2.1 Mobile Workcenter FOD Cabinet

Figure 2.1

The design of this cabinet it has drawers with foam inserts that feature cut profiles for individual tools. Inserts make tool absence evident and protect tools. Unit comes with one wide drawer, located below cabinet surface. Mix and match options include 2 banks of drawers or one bank of drawers and cabinet with hinged door. Each drawer holds up to 400 lb and glides on roller-bearing carriage system. Casters are available to hold up to 1,200 lb.

2.2.2 Smooth Action 7 Drawer Roller XTB796B Serie – Red

Figure 2.2

This XTB796B Series Tool Cabinet is perfect for the home, garage or the workshop. It is of solid build and is designed so that you can prolong the lifespan of your tools by storing them securely. This roller tool cabinet has 7 tool drawers that include a smooth action slide mechanism and comes in a great finish. It capacity to storage is about 31.5 kg. The dimension of this product is 517 W x 317 D x 735 H mm.

2.2.3 Machinemart Cabinet

Figure 2.3

Machinemart cabinet has seven drawer mobile tools cabinet for automotive or general workshop use incorporating various features designed to ensure long term service with security. This cabinet has heavy gauge double wall steel construction with reinforced base and one piece friction glide drawer runners for smooth operation. It has controlled movement with side handle (fits either end) and four castors (2 fixed and 2 swivel with brake).The maximum weight it can loading is 400kg. Dimensions of this product is (WDH) 760x465x950mm.

2.3 FABRICATION PROCESSES

2.3.1 Welding

Figure 2.4

Welding is a fabrication process that joins materials, usually metals or thermoplastics, by causing coalescence. This is often done by melting the workpieces and adding a filler material to form a pool of molten material (the weld puddle) that cools to become a strong joint, with pressure sometimes used in conjunction with heat, or by itself, to produce the weld. This is in contrast with soldering and brazing, which involve melting a lower-melting-point material between the workpieces to form a bond between them, without melting the workpieces

Many different energy sources can be used for welding, including a gas flame, an electric arc, a laser, an electron beam, friction, and ultrasound. While often an industrial process, welding can be done in many different environments, including open air, underwater and in outer space. Regardless of location, however, welding remains

dangerous, and precautions must be taken to avoid burns, electric shock, eye damage, poisonous fumes, and overexposure to ultraviolet light.

2.3.2 Punching

Punching in metal fabrication is the process of using a machine to press a shape through a sheet of metal and into a die to create the desired shape in the metal. This is most commonly done by use of a turret, a computer numerical controlled machine that houses tools and their corresponding dies in a revolving indexed turret. These machines use hydraulic, pneumatic, or electrical power to press the shape with enough force to shear the metal.

The shape is formed by pressing the material against a die with a huge force. The shear forces generated between the material and die separate the material into the desired shape. The desired shape is not obtained, however, as burred edges and rough surfaces are formed. These edges and surfaces must be further processed until the desired shape is achieved.

2.3.3 Bending

Figure: 2.6

Press brakes and bending machine are used to bend and fold metal pressing it into a die. There are several types of press brake and bending machine. Example include a hydraulic press brake, folding equipment, bending machine, press brake tooling, CNC brake press and a sheet metal press brake. A hydraulic press brake is designed for both specialized sheet metal work and continuous production application. A hydraulic press brake is designed to handle tough industrial production jobs from single cycle operations to automated cell components. Folding equipment can be used to stiffen new metal panels that would otherwise flap around, and to put lips on pieces of sheet that would normally need screws passed through the front face. A bending machines forms angel in sheet metal.

2.3.4 Rivet

Figure 2.8

A rivet is a mechanical fastener. Before it is installed it consists of a smooth cylindrical shaft with a head on one end. The end opposite the head is called the buck-tail. On installation the rivet is placed in a pre-drilled hole. Then the tail is "upset" (i.e. deformed) so that it expands to about 1.5 times the original shaft diameter and holds the rivet in place. To distinguish between the two ends of the rivet, the original head is called the factory head and the deformed end is called the shop head or buck-tail.

Because there is effectively a head on each end of an installed rivet it can support tension loads (loads parallel to the axis of the shaft); however, it is much more capable of supporting shear loads (loads perpendicular to the axis of the shaft). Bolts and screws are better suited for tension applications.

Fastenings used in traditional wooden boat building like copper nails and clinch bolts work on the principle of the rivet but they were in use long before the term rivet was invented. So, where they are remembered, they are usually classified among the nails and bolts respectively.

2.3.5 Shearing

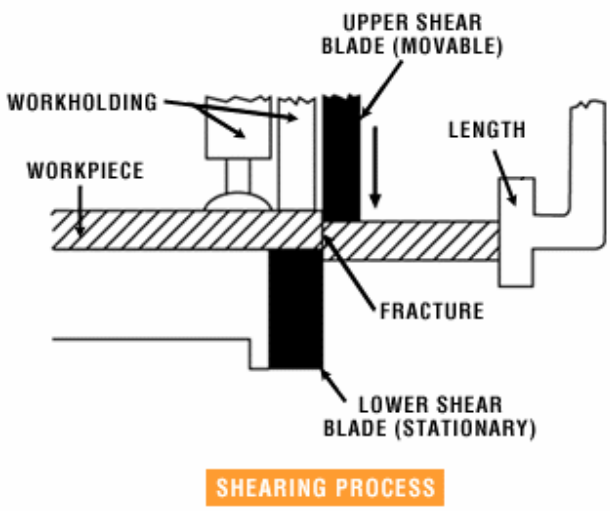

Figure 2.9

Shearing is a metal fabricating process used to cut straight lines on flat metal stock. During the shearing process, an upper blade and a lower blade are forced past each other with the space between them determined by a required offset. Normally, one of the blades remains stationary.

CHAPTER 3

METHODOLOGY AND PROCEDURE

3.1 INTRODUCTION

In this chapter will discuss about steps that we need to follow in completing final year project. .Beside that, this chapter also represent about methods and machining process that will be used.

3.2 PROJECT FLOW CHART

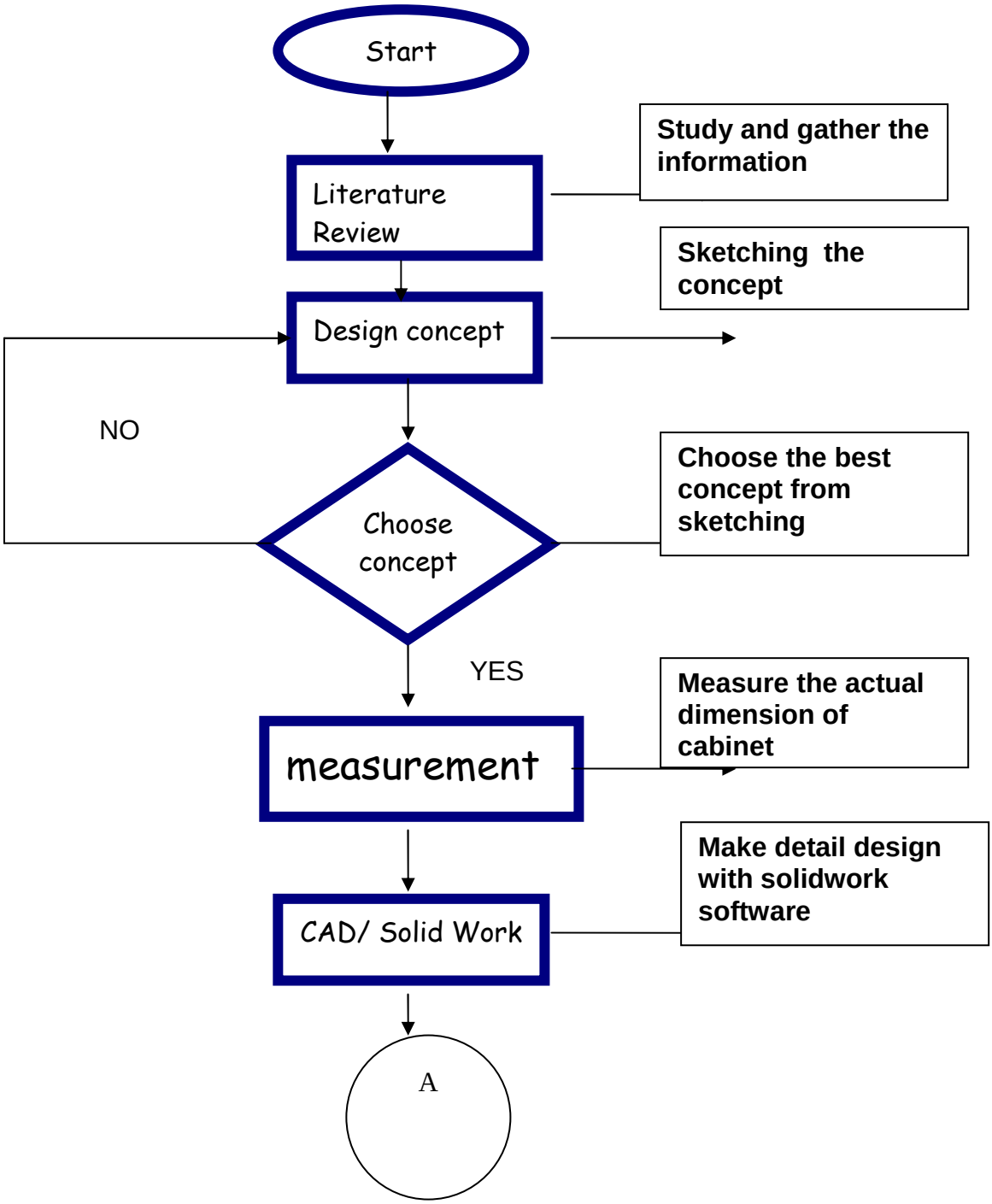

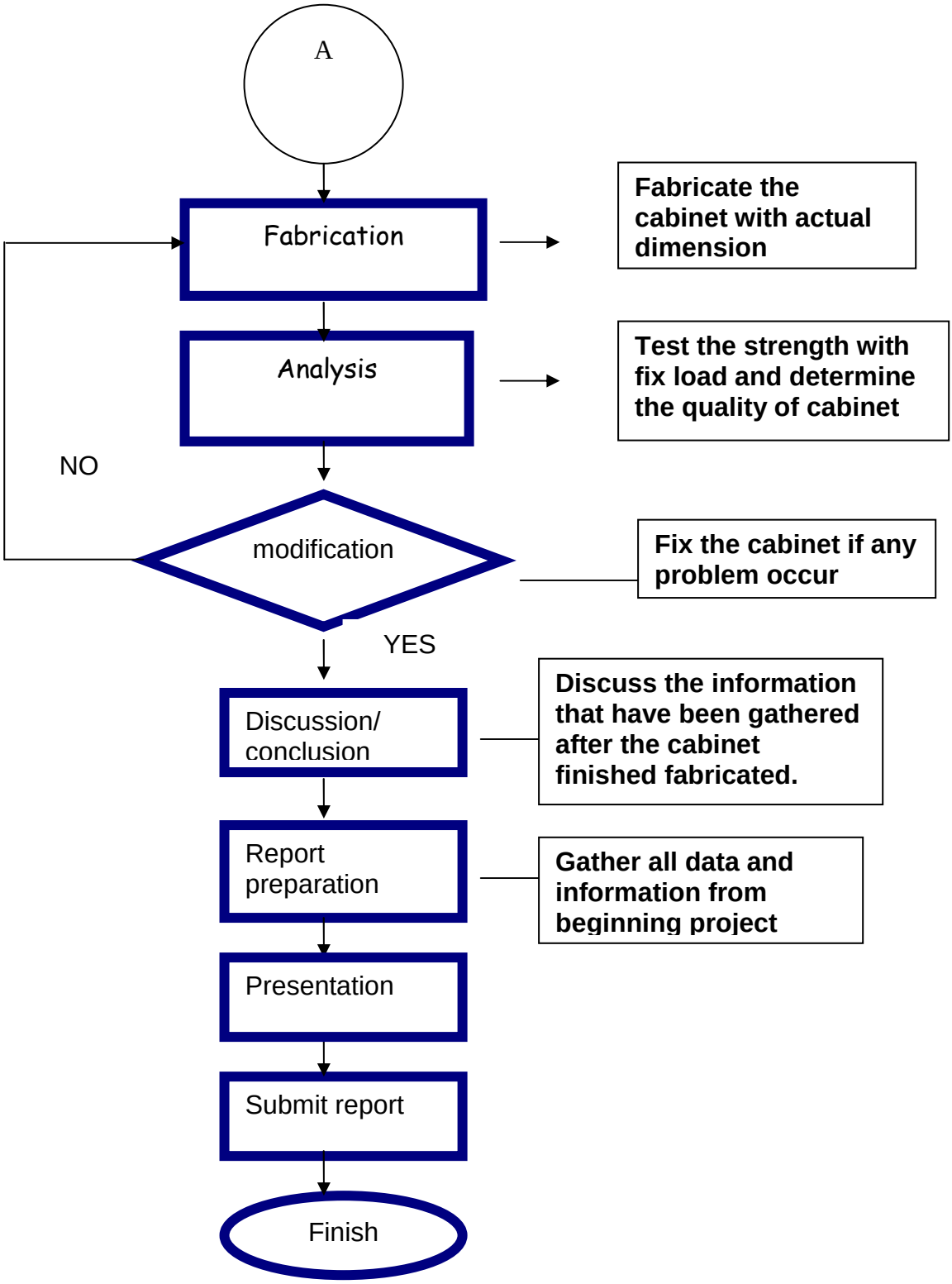

Figure 3.1: Flow chart

From the flow chart above, this project was start with literature review and research about the title. Then, study and make a lot of investigation about storage cabinet. This includes a study about concept of storage cabinet, process to fabricate, and material. These tasks have been done through study on the internet, books and others.

Then the information gathered and the project is continued with the design process. It is important to make a best design for the project. After several design sketched, the best concept have been chosen through it advantages. The selected design is then transferred to detail drawing by using Solidwork software.

After all the engineering drawing finished, the drawing has been used as a reference for next process, which is fabrication process. The manufacturing processes include in this process are welding, cutting, drilling, bending and others.During the fabrication process, if any wrong occur the modification step will be take the action.

Analysis stage has been implemented after fabrication stage. The evaluation is by considering the strength, durability, safety and others.

Then after all processes that mentioned above is done, all materials for report writing are gathered. The report writing will be guided by the UMP final year report writing. Preparation for final presentation also being made by finished the slide show. The project ended after the presentation and submission of the report.

3.3 DESIGN

3.3.1 Introduction

The design of storage cabinet for bending tools must be compliance to several criteria. The design consideration must be done carefully so the design can be fabricated and the cabinet is functioning. The criteria that must be considered in designing the cabinet are:

i) **Durability:** The cabinet must be durable when fill with bending tools.

ii) **Material :** The material must suitable to fabricate the cabinet and easy to get.

iii) **Cost :** It depends on material and manufacturing processes.

.

3.3.2 Concept Selection Method

The design of storage cabinet for bending tools must trough process of concept selection method. It includes sketching four types of cabinet that have certain characteristic and advantages. The sketches design of the cabinet are:

i. Concept A

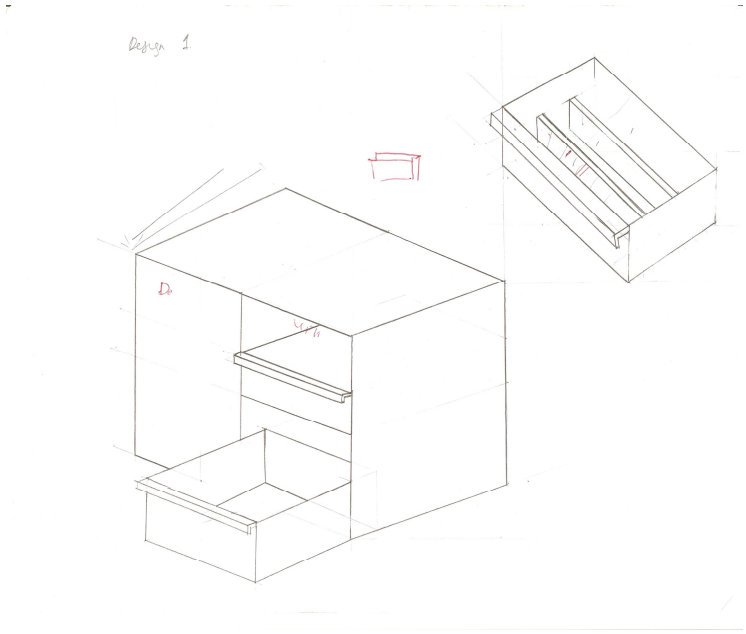

Figure 3.2: Concept design A

It have simple design and easy to storage the bending tools. But the problem of this design is it not a portable product .Beside that it cannot storage the tools specifically. The process that will use is welding, bending, rivet, punching and others.

ii. Concept B

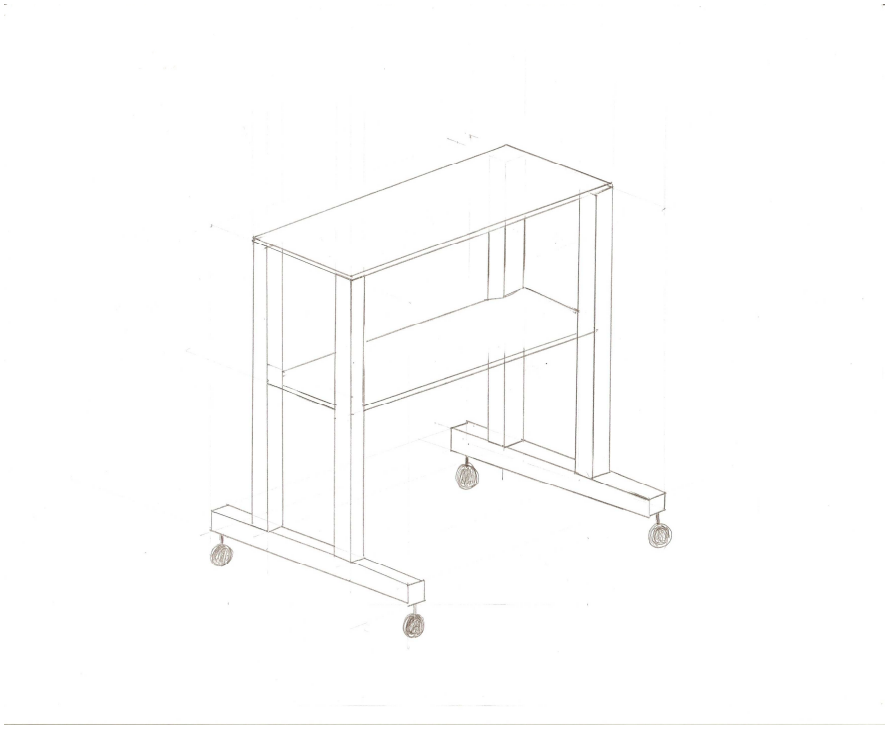

Figure 3.3: Concept design B

It also a simple design. Beside that it is a portable product. But the problem of this product is it not really suitable to storage the bending tools because it don't have specific rack. It also not have enough capacity to storage the tools. This cabinet will use manufacturing a lot of processes such as bending, shearing, punching, welding, rivet and others.

iii. Concept C

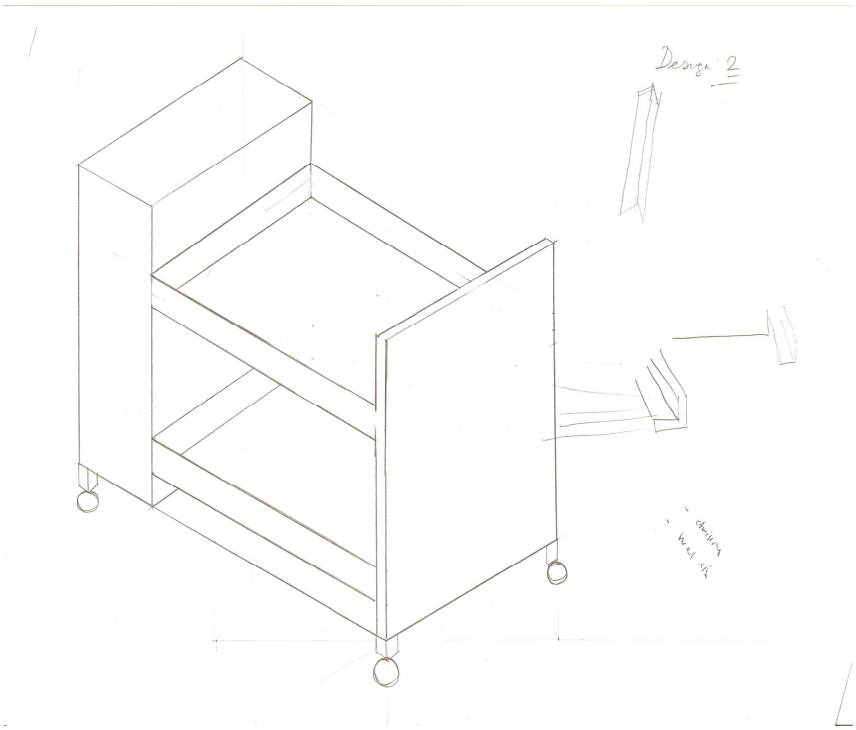

Figure 3.4: Concept design C

The advantages of this product are it a portable design. This design also have enough capacity and easy to storage the tools. But the disadvantage of this design is it difficult to move it because it doesn’t have the holder. This design will use some processes like bending, sheering, punching, welding, drilling and others.

iv. Concept D

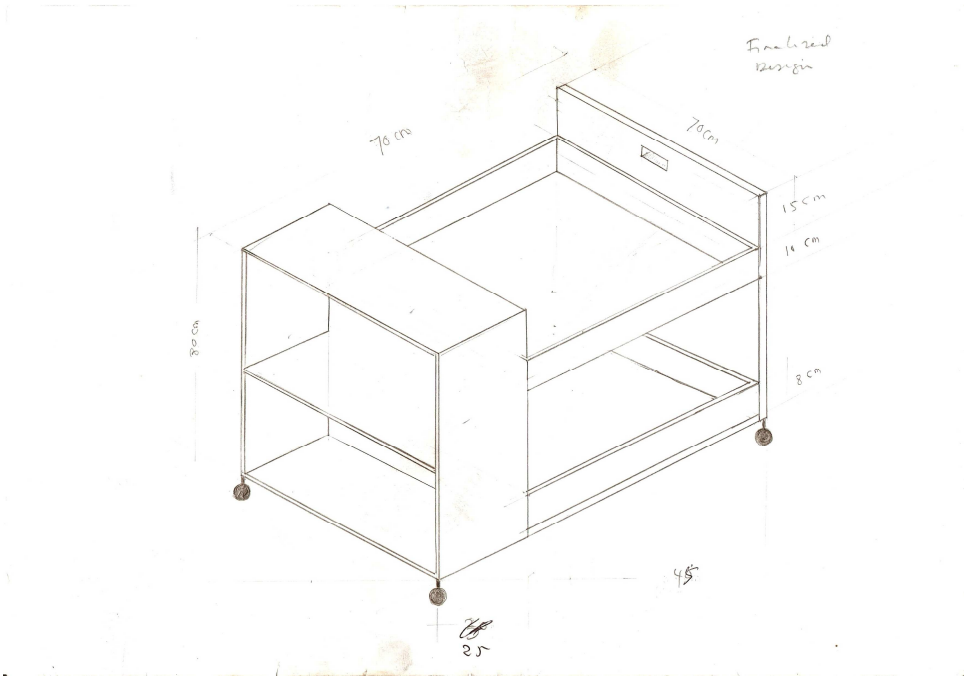

Figure 3.5: Concept Design D

This design is modification of design C. These designs have more advantages compared to the design before. This is a portable design and easy to storage the bending tools. Beside that, it also has a holder to make it easy to move. To fabricate this design it will be use a lot of manufacturing processes such as welding, bending, punching, sheering and others.

From the design sketch, one of the best designs will be selected. It can be evaluated through several section criteria for it function.

The first criteria are customer needs. It is important to know what customers want about this product. It is easier when product enter the market. Next selection criteria is easy to use.

Beside that, easy to manufacture also be an important criteria to select the design. It is include the process to fabricate the concept, the material that will use, the capability of the machine at FKM lab to fabricate the design and others

After that, cost of manufacture also has been considered as selection material. When the concept enter a market, cost is very important to attract customer to but it. Lastly the selection criteria is the strength or the product. The strength of the product can be know through the analysis.

According to the criteria above, the concept D have been selected as the best design. It is because the concept D can fulfill the criteria and have some advantages compared to design A, design B, and design C. To select the best idea the Pugh concept have been used. The Pugh concept just like table 3.6.

Selection Criteria	Concept A	Concept B	Concept C	Concept D
Easy to handling	(-)	(-)	(-)	(+)
Capability	(+)	(+)	(+)	(+)
Strength	(-)	(-)	(+)	(+)
Shapes	0	(-)	(+)	0
Weight	(+)	(+)	**(-)**	(-)
Function	0	0	(+)	(+)
Plusses	2	2	3	4
Same	2	1	0	1
Minuses	2	3	2	1
Net	0	**-1**	1	**3**
Rank	**4**	**3**	**2**	**1**
Continues	NO	NO	NO	YES

Table 3.6: Pugh concept

3.3.3 Product Design Specification

After select the selection concept, it shows that concept D is the best concept and must be fabricated. The product design specification is like below:

i) Chassis

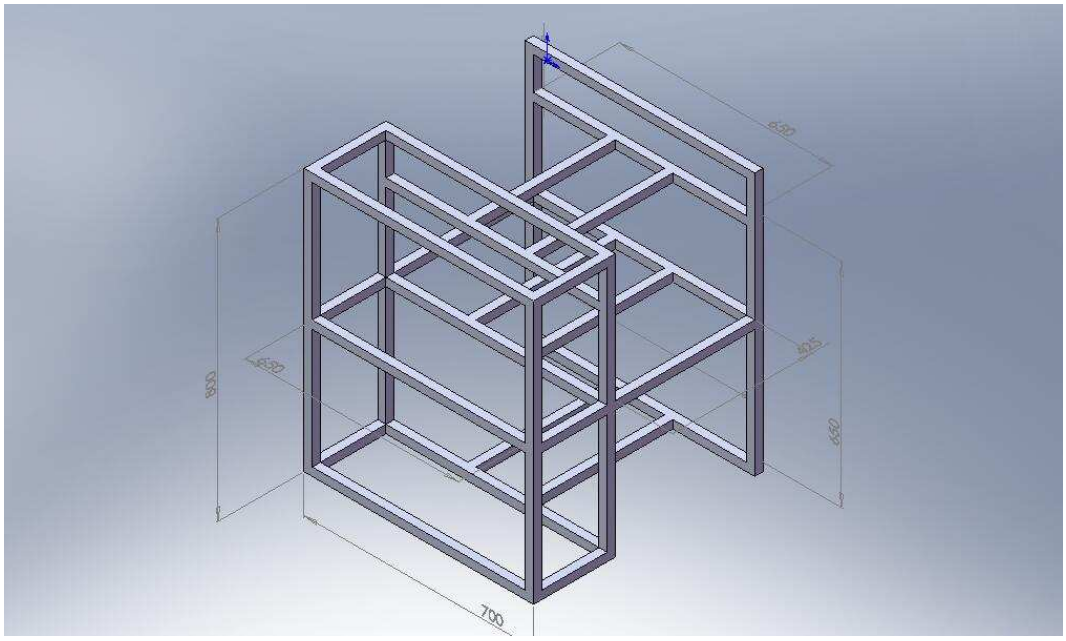

Figure 3.7: Chassis

- The material is 1 x 1 inches MILDSTEEL hollow bar
- Using arc welding to fabricate the chassis
- The function of the chassis is to support the load from the bending tools.

ii) Tray

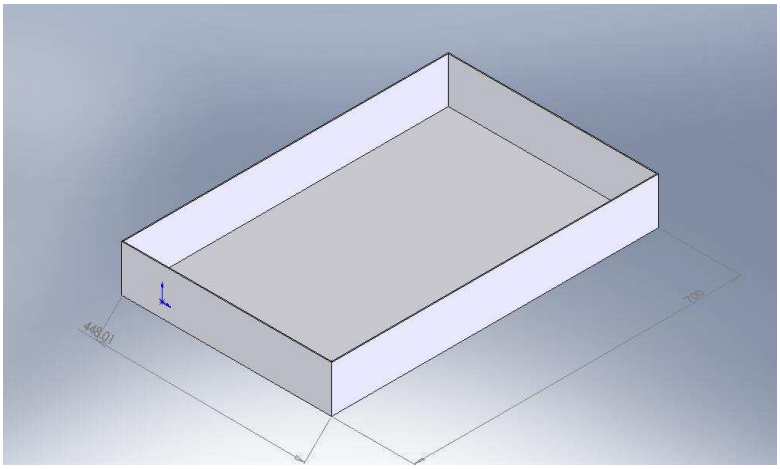

Figure 3.8: Tray

- The material for this part is mild steel sheet metal 1.5mm
- The dimension is 450mm x 700mm (3pieces)
- Using bending machine and turret punch machine to fabricate this part
- The function of tray is to hold the tool rack

iii) Tools rack

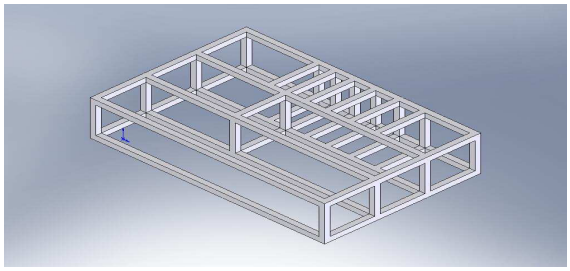

Figure 3.9: Tools Rack

- Using hollow bars iron 0.5 x 0.5 inches
- Using Metal inert gas (MIG) welding to fabricate the racks
- The function of tool rack is to hold the bending tools.

iv) Cassis cover

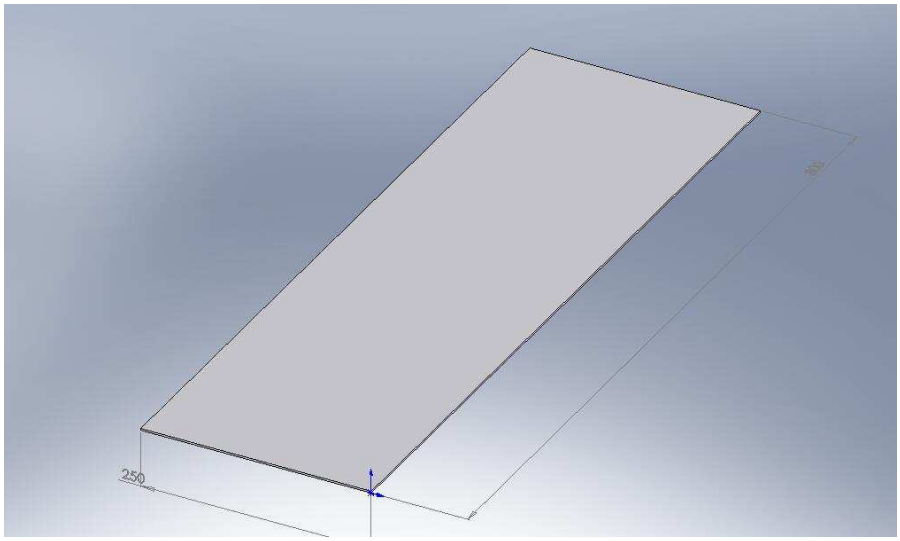

Figure 3.10: Chassis cover

- The material for this part is mild steel sheet metal 1mm
- Dimension for :

1) Left and right side =250mm x 800mm (2 pieces)

2) Top and bottom side =700mm x 250 mm (2 pieces)

- Using sheering process to make this part.

v. Full Assembly

Full assembly Storage Cabinet for Bending Tools (before modification)

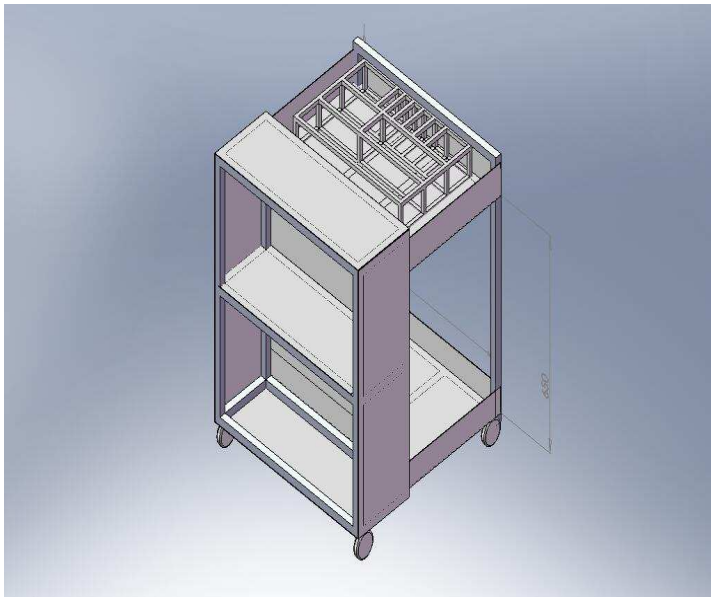

Figure 3.15: Assembly Part

vi) Full assembly (after modification)

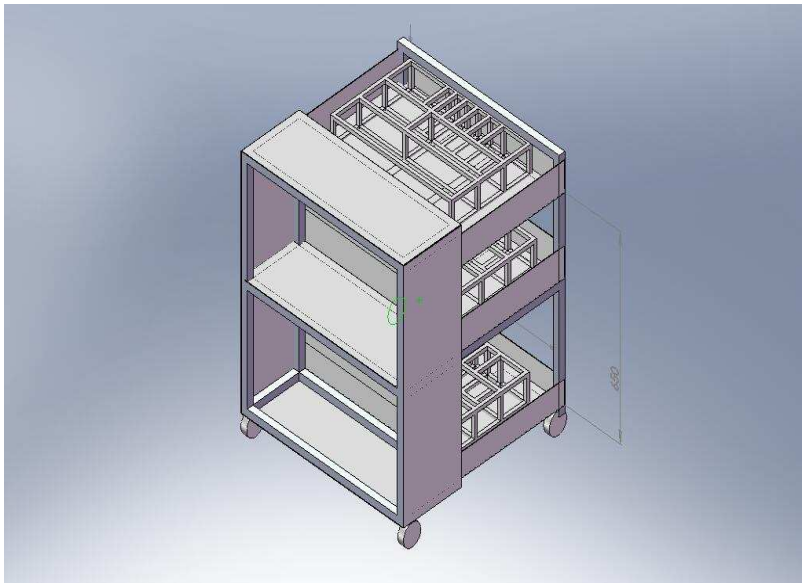

Figure 3.16: Assembly part after modification

3.4 Processes Involves

In order to make the design come reality, fabrication process needs to be done first .The fabrication process start from dimensioning the raw material until it is finish as a desire product .The processes that involve are:

i) Getting material

Figure 3.17 introduces the material have in UMP mechanical laboratory.This rack have more type of steel like rectangular hollow, hollow cylinder and etc.

Figure 3.17: Raw material

ii. Measuring and Marking

After get the material, next step is measuring and making material like Figure 3.18. The equipment used in this process is measuring tape and marker pen. The scale is from solid works software and this scale is the true.

Figure 3.18: Marking and measuring process

iii. Cutting process

Figure 3.19 introduce the process cutting the material using floor cutter disc after measurement and making process.

Figure 3.19: Cutting process

iv. Joining Process

Figure 3.20 introduce about joining method using MIG welding .This process is used to joining the chassis part and make the tools rack.

Figure 3.20: Joining process by using MIG weld

v. Shearing process

The purpose of shearing process is to cut the Zink sheet metal 1mm thickness according it dimension. While this process, shearing machine have been used.

Figure 3.21: Set up the shearing machine

vi. Grinding process

After cutting and welding process the chip from work piece must remove using hand grinding show in figure 3.22 to remove chip after process cutting and remove bead after welding process on the work piece and get smooth surface before joining and after joining process. This step must take to protect from dangerous because the chip is very sharp.

Figure 3.22: Grinding process

vii. Finishing process (painting)

After grinding process, the finishing process is taken place. The purpose of painting is to make the product be more interesting.

Figure 3.23: Painting process

CHAPTER 4

RESULT AND DISCUSSION

4.1 INTRODUCTION

This chapter will discuss about the completed fabrication, types of defects, product specification and cause of problem in this project. The analysis also was helped to give improvement of the cabinet.

4.2 RESULTS

After finish fabrication process, the product has been analyzed. At this stage, all information about this product is collected and gathered. It is important to classify the product before it can use. The complete fabrication of the product is like below.

Figure 4.1: Isometric view

Figure 4.2: Front view

Figure 4.3: Back view

Figure 4.4: Side view

4.2.1 Product Specification

Product specification is one of example for analysis process. The product specification is like below.

Table 4.5: Table of product specification

Category	**Result**
Type	Roller cabinet
Dimension	700mm W x 700mm D x 800mm H
Color	Black
Height	800mm
Maximum force can be load	100 kg

4.3 DISCUSSION

Discussion is diving by two parts. Firstly is discussion about type of defect on the final product .Second, is about the problem in progress start with literature review until fabricate and finish this product.

4.3.1 Type of Defect

After finish fabrication process, many type of defect was existed. It happened from fabrication process and weakness during using several machine and tools. Type of defects is like below.

i. Bead

Figure 4.6 is example a defect on legs cabinet .The bead is not trim from welding process. The voltage when welding process is not suitable for this material. Insufficient experience to handle also caused of the defected.

Figure 4.6: Bead at the legs cabinet.

ii. Gap

Figure 4.6 is shown a defect in part .It is occurring after using arc welding.

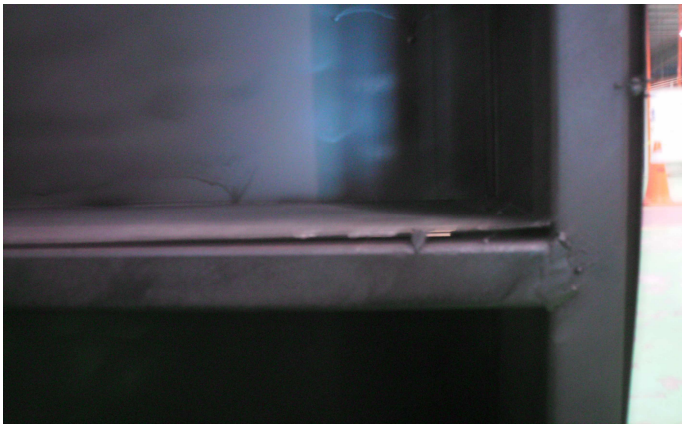

Figure 4.7: Gap between two materials.

iii. **Not parallel**

This defect happen cause by less skill when process weld the legs cabinet .When the legs is not place at the flat surface during weld the leg.

Figure 4.8: Leg not parallel

CHAPTER 5

CONCLUSION AND RECOMMENDATION

5.1 INTRODUCTION

For the final chapter it present about conclusion and recommendation for the project. The important things for this chapter are about the problems encountered during the whole project carried out. The problem are included the process planning that have been done. These project problems also make the student to think more creative to solve the problem. This chapter also discuss about the conclusion of the project that is concluding all the process involved. Beside that, this chapter also contains recommendation about project. This is very important to make some improvement about the project for future work.

5.2 CONCLUSION

As the conclusion, the objective of the project was achieved. The cabinet has better space for better arrangement of bending tool. This because the dimension of the cabinet is 700 x 700 x 800 mm. So it has very suitable space to storage the tools. Besides that this cabinet have rack that have been designed to storage the tools specifically. So the messy situation when storage the tool can be solves. This cabinet also provide better ergonomic factor for the comfortable situation when using it. It also was introduced new concept of the table that suitable with costumer specification.

5.3 RECOMMENDATIONS

After finish the project, the cabinet look very stable and interesting. But several recommendations to improvement for me and faculty for future final year project are still need. The material that be used for cover up the chassis need to change from sheet metal mild steel to sheet metal stainless steel. This can reduce the weight of the project.

Beside that, more time given to the project, it includes statement the final year student should more focus on final year project. This could make the result of project finish on time and have better result.

At the last all machines and equipments at FKM LAB always should be in good condition. This situation can help student to complete their project on time.

REFERENCES

1. *http://en.wikipedia.org/wiki/Gas_metal_arc_welding*

2. *www.machinemart.co.uk/shop/product/detailst...*

3. *http://en.wikipedia.org/wiki/bending.htm*

4. *http://en.wikipedia.org/wiki/punching.htm*

5. *Kalpakjian Schmid, Manufacturing Engineering And Technology, Fifth Edition In SI Units.*

6. www.dealsdirect.com.au./

APPENDIX A

DETAIL DRAWING

APPENDIX B

MACHINE TOOLS AND EQUIPMENTS

APPENDIX B

MACHINE TOOL AND EQUIPMENT

MIG Welding Machine

Abrasive Cutter

Measuring Tape

Hand Grinding

Personal Protection Equipment (PPE): Visor, Goggle, Glove & Apron

Hand Drill

Rivet Pop

1.2 Problem Statement

These problems always happen when we need to storage the bending tools:

i) The bending tools don't have specific place to store

Figure 1.1

ii) Difficult to select and recognized the tools that we want to use

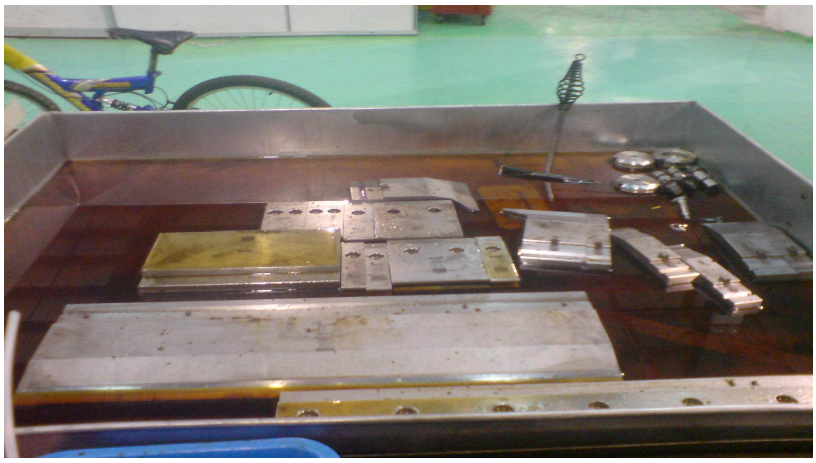

Figure 1.2

iii) Unsuitable place to storage the tools

Figure 1.3

1.3 PROJECT SCOPE OF WORK

Scopes of the projects are depends on process, equipments and materials:

- To create of product planning and get some information.
- Design of product is assisted by using solidwork software
- Fabrication process will use all necessary manufacturing process including punching, bending, cutting and mechanical joining method.
- Material that has been used to fabricate this cabinet are mild steel sheet metal and rectangular hollow bar.

1.4 PROJECT OBJECTIVE

The main objective of this project is to design and fabricate storage cabinet for bending tools based on mechanical design method. It is also to provide better space to storage the bending tools easily and practically. Besides that, other objective for this project knows how to solve the problem that might be occurring.

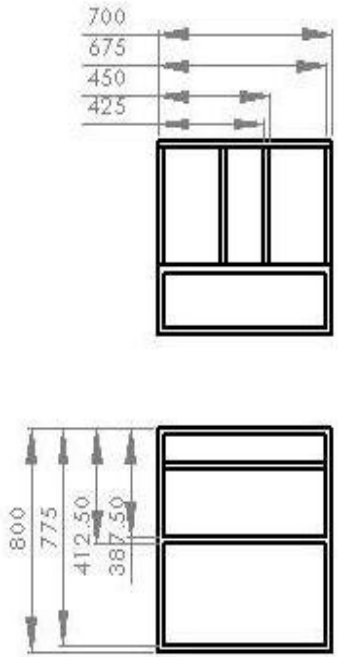

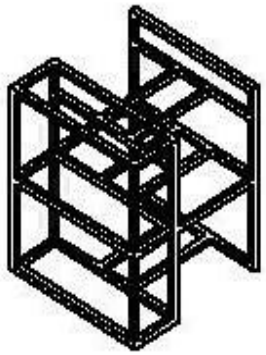

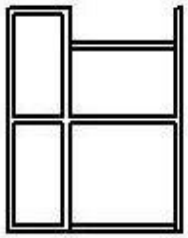

DRAWN			
CHECKED			
APPROVED			
MFG			
Q.A.			

Chassis

DWG NO. 1

A4

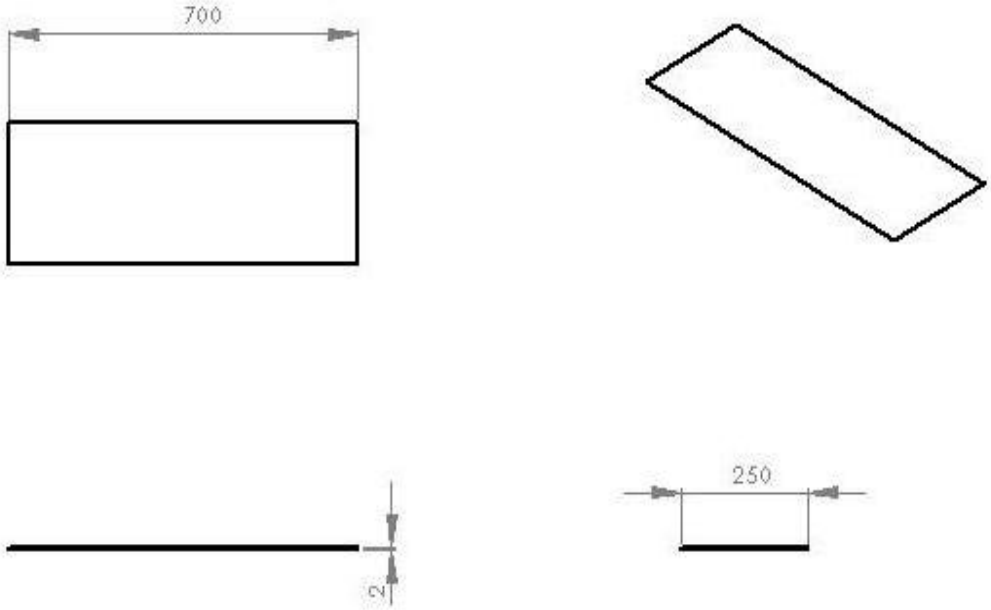

Cover 2 and 4

3

A4

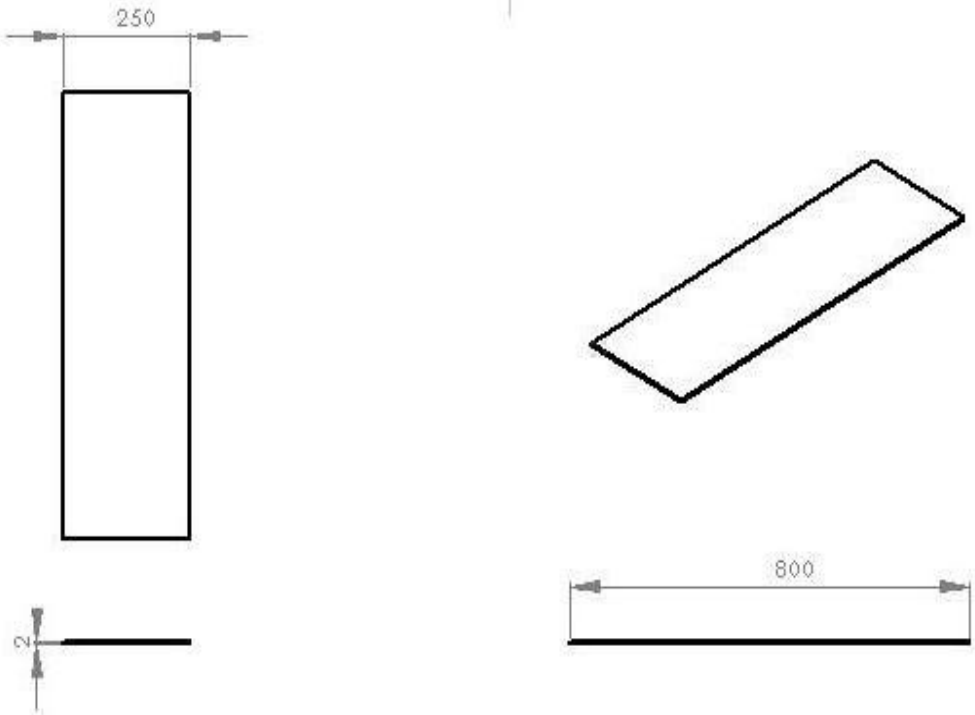

DO NOT SCALE DRAWING

Cover 1 and 3

A4

2

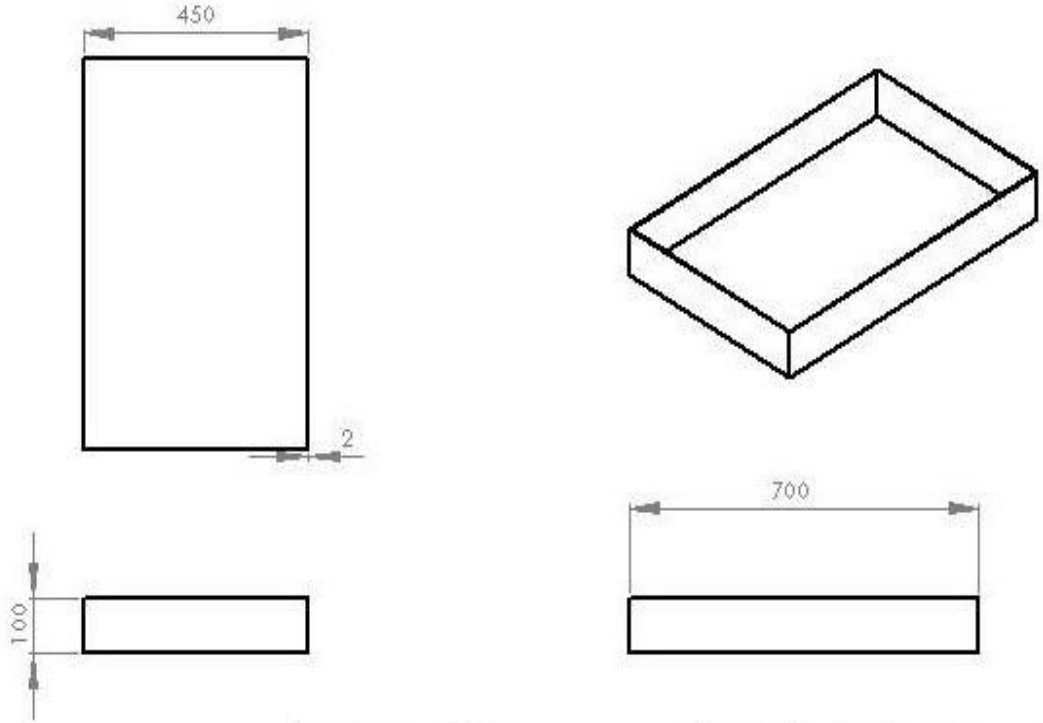

Tray Upper

4

A4

1.5 Planning Project

According to the **table 1.1:** Gantt chart, the project was started by briefing the final year project that is included the selected title of the project. After I got the title, project briefing followed by collecting literature review. These include gathering raw data through internet, books, and others source. The literature review process is on week 2.

After that, this project was continued with idea generation on week 3 and sketch and design process on week 3 and 4.This is started with sketching 4 design of cabinet and then identify the best concept from the designs. The best concept that was be chosen will be design using solidwork software with actual design.

Materials to be used must be suitable and easy to get. The criteria when selected the material is includes strength, durability and others. This is important for fabrication process.

The fabrication was started after finish cutting material. This process consist fabrications to part that has been designed by follow the dimension using various type of manufacturing process. The manufacturing process is determined from a literature review.

Evaluation stage has been implemented after fabrication stage. The evaluation is to consider the strength, durability, safety and workability of the cabinet. If any problem occurs during the evaluation, modification will be done.

Next task is final report writing and final presentation preparation. The report is guided by UMP Thesis writing guided and also the guidance from my supervisor.

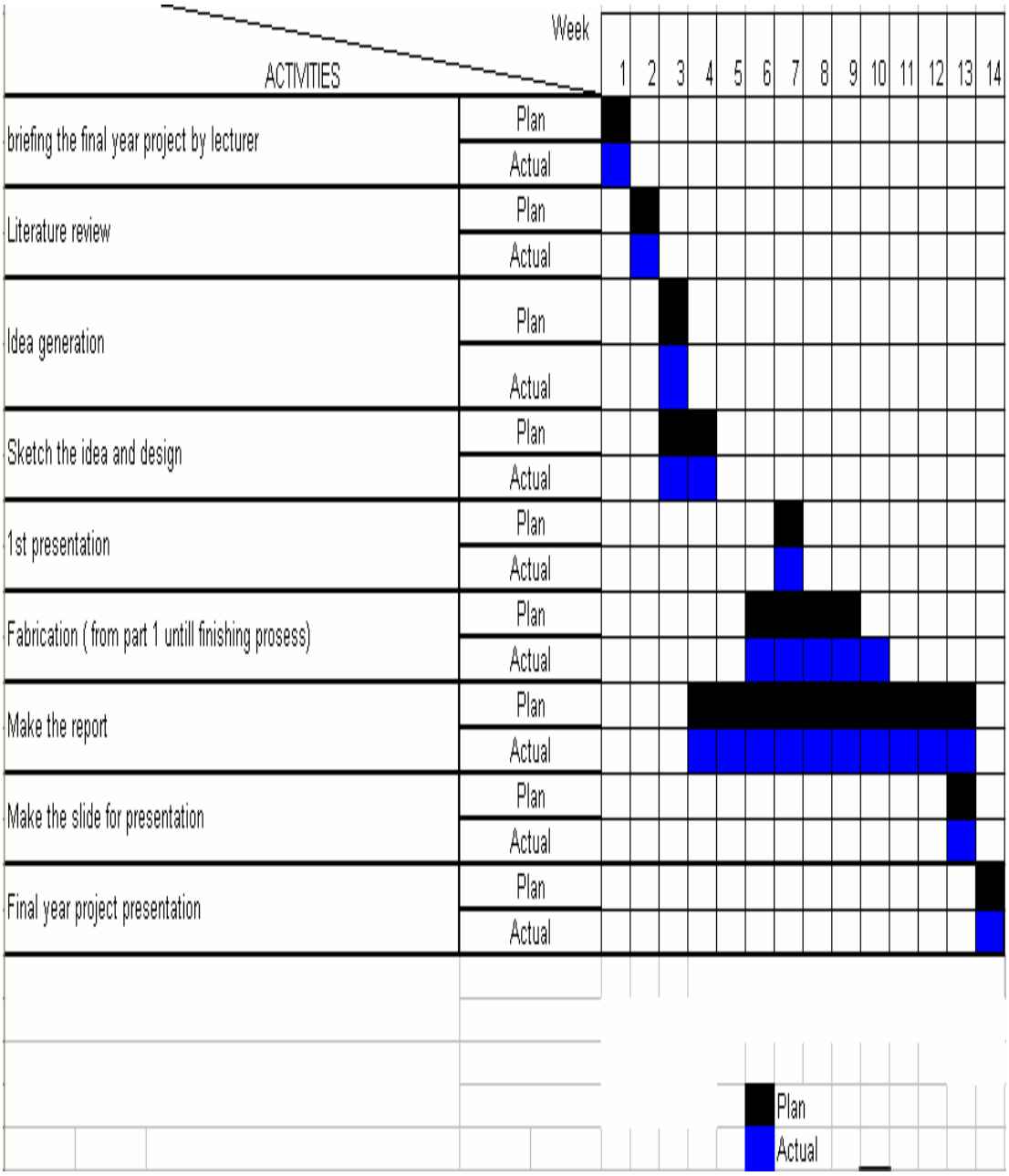

Table 1.1: Gantt chart project