DESIGN SUITABLE PUNCH OR DIE TO OVERCOME SPRINGBACK ON U-BENDING

TUAN ABDUL HADI BIN TUAN JUSOH

A report submitted in partial fulfilment of the requirements

for the award of the degree of

Bachelor of Manufacturing Engineering

Faculty of Manufacturing Engineering

UNIVERSITY MALAYSIA PAHANG

JUNE 2012

UNIVERSITI MALAYSIA PAHANG

BORANG PENGESAHAN STATUS TESIS

JUDUL: DESIGN SUITABLE PUNCH OR DIE TO OVERCOME SPRINGBACK ON U-BENDING

SESI PENGAJIAN: 2011/2012

Saya, **TUAN ABDUL HADI BIN TUAN JUSOH (880621-11-5395)**
(HURUF BESAR)

mengaku membenarkan tesis Projek Tahun Akhir ini disimpan di perpustakaan dengan syarat-syarat kegunaan seperti berikut:

1. Tesis ini adalah hakmilik Universiti Malaysia Pahang (UMP).
2. Perpustakaan dibenarkan membuat salinan untuk tujuan pengajian sahaja.
3. Perpustakaan dibenarkan membuat salinan tesis ini sebagai bahan pertukaran antara institusi pengajian tinggi.
4. **Sila tandakan (√)

[ ]	**SULIT**	(Mengandungi maklumat yang berdarjah keselamatan atau kepentingan Malaysia seperti yang termaktub di dalam AKTA RAHSIA RASMI 1972)
[ ]	**TERHAD**	(Mengandungi maklumat TERHAD yang telah ditentukan oleh organisasi / badan di mana penyelidikan dijalankan)
[√]	**TIDAK TERHAD**	

Disahkan oleh:

_____ _____

(TANDATANGAN PENULIS) (TANDATANGAN PENYELIA)

Alamat Tetap:

731-B Kg Raja Chendering,
21080 Kuala Terengganu,
Terengganu Darul Iman
Tarikh: 11 JUNE 2012

AHMAD ROSLI BIN ABDUL MANAF
(NamaPenyelia)

Tarikh: 11 JUNE 2012

CATATAN: * Potong yang tidak berkenaan.

** Jika tesis ini SULIT atau TERHAD, sila lampirkan surat daripada pihak berkuasa/organisasi berkenaan dengan menyatakan sekali tempoh tesis ini perlu dikelaskan sebagai SULIT atau TERHAD.

SUPERVISOR'S DECLARATION

I hereby declare that I have checked this project and in my opinion, this project is adequate in terms of scope and quality for the award of the degree of Bachelor of Manufacturing Engineering.

Signature : ……..

Name of Supervisor : MR AHMAD ROSLI BIN ABDUL MANAF

Position : LECTURER OF MANUFACTURING ENGINEERING

Date : 11 JUNE 2012

STUDENT'S DECLARATION

I hereby declare that the work in this project is my own except for quotations and summaries which have been duly acknowledged. The project has not been accepted for any degree and is not concurrently submitted for award of other degree.

Signature : …….

Name : TUAN ABDUL HADI BIN TUAN JUSOH

ID Number : FA09070

Date : 11 JUNE 2012

DEDICATION

To beloved Mother and Father

ACKNOWLEDGEMENT

I am grateful and would like to express my sincere appreciation to my main thesis supervisor, Mr. Ahmad Rosli Bin Abdul Manaf for his germinal ideas, invaluable guidance, continuous encouragement and constant support in making this research possible. He has always impressed me with his outstanding professional conduct, his strong conviction for science, and his belief that a bachelor program is only a start of a lifelong learning experience. Without his continuous support and interest, I would not have been able to complete this final year project successfully. I also sincerely thanks for the time spent proofreading and correcting my many mistakes.

I am also indebted to Universiti Malaysia Pahang (UMP) for providing internet and final year project lab facility. Special thanks also given to librarians UMP for their assistance in supplying the relevant literatures and are useful indeed.

I acknowledge my sincere indebtedness and gratitude to my parents for their love, dream and sacrifice throughout my life. I am also grateful to my fellow members for their supportive and helps that were inevitable to make this work possible. I cannot find the appropriate words that could properly describe my appreciation for their devotion, support and faith in my ability to attain my goals. I would like to acknowledge their comments and suggestions, which was crucial for the successful completion of this study.

ABSRACT

This project deals with the overcoming springback on u bending. Now days, many research and study have been done on a springback. In sheet metal bending, a flat part is bent using a set of punches and dies. The punch and the dies are mounted on a press machine, which control the relative motion between the punch and die and provides the necessary bending pressure. This project is done with simulation of springback using a material of Stainless Steel on U-bending process by using a 1 mm thickness and the size of the specimen is 100 mm x 90 mm. The springback of Stainless Steel sheet was investigated using finite element analysis. Hyperform software is used in this project to simulate the springback of sheet metal in U-bending. The main problem of the bending process is spring-back phenomenon after removing the punch. The aim of this study includes the springback optimization of the part that required U bending processes using the concept of experimental design a suitable punch or dies.

ABSTRAK

Projek ini berkaitan dengan mengatasi penganjalan pada u membengkuk. Sekarang ini, banyak penelitian dan pelajaran telah dilakukan pada sebuah penganjalan. Dalam lembaran logam lentur, bahagian datar dibengkokkan dengan menggunakan satu set penebuk dan acuan. Penebuk dan acuan terpasang pada mesin penekan, yang mengawal gerakan relatif antara penebuk dan acuan dan memberikan tekanan lentur yang diperlukan. Projek ini dilakukan dengan simulasi penganjalan menggunakan bahan dari Stainless Steel tentang proses membengkuk berbentuk U dengan menggunakan ketebalan 1 mm dan ukuran spesimen adalah 100 mm x 90 mm. Penganjalan pada bahan Stainless Steel diteliti menggunakan analisis elemen. Simulasi Hyperform digunakan dalam projek ini untuk mensimulasikan penganjalan dari lembaran logam pada acuan berbentuk U. Masalah utama dari proses ini adalah mengehadkan kembali fenomena setelah melepaskan penebuk. Tujuan dari penelitian ini merangkumi optimasi penganjalan dari bahagian yang diperlukan proses membentuk U dengan menggunakan konsep experimen pada penebuk dan acuan.

TABLE OF CONTENT

	Page
SUPERVISOR'S DECLARATION	ii
STUDENT'S DECLARATION	iii
DEDICATION	iv
ACKNOWLEDGEMENTS	v
ABSTRACT	vi
ABSTRAK	vii
TABLE OF CONTENT	viii
LIST OF TABLES	xiii
LIST OF FIGURES	xiv
LIST OF SYMBOLS	xvii
LIST OF ABBREVIATIONS	xviii

CHAPTER 1 INTRODUCTION

1.1	Introduction	1
1.2	Project Background	1
1.3	Problem Statement	3

1.4 Objectives 3

1.5 Scope Of The Project 3

CHAPTER 2 LITERATURE REVIEW

2.1 Introduction 4

2.2 Theory Of Sheet Metal Bending 4

2.3 Type Of Bending Process 5

2.3.1 U-Bending 5

2.3.2 L-Bending 6

2.3.3 V-Bending 7

2.4 Base Equation Of Bending Force 7

2.5 Stress-Strain Curve 8

2.5.1 Yield Point 8

2.5.2 Ultimate Tensile Strength 9

2.6 Plane Stress 9

2.7 Plane Strain 9

2.8 Springback 10

2.8.1 Springback On Sheet Metal U-Bending 11

2.8.2 Springback Prediction Technique 11

2.9 Finite Element Analysis 16

CHAPTER 3 METHODOLOGY

3.1	Introduction	18
3.2	Flow Chart Of Methodology	19
3.3	Process Flow Chart	20
3.4	Literature Review	21
3.5	Design Process	21
	3.5.1 Design Concept	22
	3.5.2 Design Concept A	22
	3.5.3 Design Concept B	24
	3.5.4 Design Concept C	26
3.6	Software	29
	3.6.1 CAD Modeling Software	29
	3.6.2 Hyperform Software	30
3.7	Experimental Setup	30
	3.7.1 Machining Process	31
	3.7.2 Machine And Equipment Use In Bending Process	32
3.8	Material Selection	33
	3.8.1 Stainless Steel	34

CHAPTER 4 RESULT AND ANALYSIS

4.1	Introduction	35
4.2	Simulation Result	35
	4.2.1 Springback Analysis Product of Design A	35
	4.2.2 Springback Analysis Product of Design B	38
	4.2.3 Springback Analysis Product of Design C	41
4.3	Formability Result	45
	4.3.1 Formability analysis product of design A	45
	4.3.2 Formability analysis product of design B	47
	4.3.3 Formability analysis product of design C	48
4.4	Experiments Result	50
	4.4.1 Experiments result for Design A	50
	4.4.1 Experiments result for Design B	51
	4.4.2 Experiments result for Design C	52

CHAPTER 5 CONCLUSION AND RECOMMENDATION

5.1	Introduction	53
5.2	Conclusion	53
5.3	Recommendation	54

REFERENCES 55

APPENDICES 57

A1 Gantt Chart for FYP 1 58

A2 Gantt Chart for FYP 2 59

A3 Design of Die A 60

A4 Design of Die B 61

A5 Design of Die C 62

A6 Design of Punch A 63

A7 Design of Punch B 64

A8 Design of Punch C 65

LIST OF TABLE

Table no	Title	Page
1.0	Springback Value For Steel Material	15
2.0	Summarize all design parameter	28
3.0	Model Geometry	31
4.0	Springback result	43
5.0	Comparison between simulation and experiment result design A	50
6.0	Comparison between simulation and experiment result design B	51
7.0	Comparison between simulation and experiment result design C	52

LIST OF FIGURE

Figure no	Title	Page
2.1	Diagram of U-bending process	6
2.2	Diagrams of L-Bending	6
2.3	Diagram of V-bending process	7
2.4	Stress-Strain curve	8
2.5	Deformation regions on U bending	11
2.6	Details of NUMISHEET"93 benchmark	12
2.7	Measurement parameters for springback	13
2.8	Springback	14
2.9	Force elongation diagram showing the effect of work hardening and springback	16
3.0	Flow chart of methodology	19
3.1	Process flow chart of simulation and experimental design punch or die	20
3.2	(1) Isometric view (2) Front view of assembly design concept A	23
3.3	(1) Isometric view (2) Front view for die	23
3.4	(1) Isometric view (2) Front view for punch	24
3.5	(1) Isometric view (2) Front view of assembly design concept B	25
3.6	(1) Isometric view (2) Front view for die	25
3.7	(1) Isometric view (2) Front view for punch	26
3.8	(1) Isometric view (2) Front view for assembly design concept C	27
3.9	(1) Isometric view (2) Front view for die	27
3.10	(1) Isometric view (2) Front view for punch	28
3.12	EDM wirecut	32
3.12	Press Machine	33

3.13	Result analysis step 1	36
3.14	Result analysis step 2	36
3.15	Result analysis step 3	37
3.16	Result analysis step 4	37
3.17	Result analysis step 1 for product B	38
3.18	Result analysis step 2	39
3.19	Result analysis step 3	39
3.20	Result analysis step 4	40
3.21	Result analysis step 1	40
3.22	Result analysis step 2	41
3.23	Result analysis step 3	42
3.24	Result analysis step 4	42
3.25	Blank prediction	43
3.26	Formability contours from incremental analysis	43
3.27	Thinning contour from incremental analysis	44
3.28	Blank prediction	45
3.29	Formability contours from incremental analysis	46
3.30	Thinning contour from incremental analysis	46
3.31	Blank prediction	47
3.32	Formability contours from incremental analysis	47
3.33	Thinning contour from incremental analysis	48
3.34	Blank prediction	48
3.35	Formability contours from incremental analysis	49
3.36	Thinning contour from incremental analysis	49
3.37	Springback result for design A	50
3.38	Springback result for design B	51

3.39 Springback result for design C 52

LIST OF SYMBOLS

σ_{xz}	Shear stress
γ_{xz}	Shear strain
W	Wise portion

LIST OF ABBREAVIATION

FEA	Finite Element Analysis
CRES	Called Corrosion-Resistant
CAD	Computer Aided Design
UTS	Ultimate Tensile Strength
TS	Tensile Strength
FEM	Finite Element Modeling
3D	3-Dimension
2D	2-Dimension
EDM	Electric Discharge Machine

CHAPTER 1

INTRODUCTION

1.1 INTRODUCTION

This chapter will discuss about the project background, problem statement, and project objective and the scope of the project.

1.2 PROJECT BACKGROUND

In the broadest, most general sense, bending process is an important process in the sheet metal forming in many industries. The main problem of the bending process is spring-back phenomenon after removing the punch. Any parts that involve bending are subjected to spring back. Spring back will affect the part accuracies. In study analysis to experimental design a suitable punch or dies to overcome the spring back of the part that required in U bending.

Variables and their effect on springback are harder sheet metal have greater degrees of springback due to a higher elastic limit and the resulting larger elastic band at the bend. Then, a sharper or smaller bend radius reduces springback by creating a larger plastic zone and could cause tearing, due to higher stresses in the outside surface. After that, as metal is bent through greater degrees of bend, the plastic zone is enlarged and springback is reduces for each degrees of bend. Total

springback is increased. However, the thicker sheet metals have less springback because more plastic deformation occurs considering no change in the die radius.

On the other hand several methods are used to overcome spring back. These are overbending, bottoming or setting and stretch bending. The sheet metal is often overbent amount sufficient to produces the desired degree of bend or bend angle after springback. For the overbending may be accomplished by using cams, by decreasing the die clearance or by setting the punch or die steel at smaller angle than required in the case on U die. When the clearance is reduces below the sheet metal thickness, the burnishing action wipes the metal against an undersized punch or die steel.

Although the bottoming or setting consist of striking the metal severely at the radius area. This places the metal under high compressive stresses that set the metal past the yield strength. Bottoming is accomplished by placing a bead on the punch at the bend area. The pad must bottom against the shoe or backing plate so that the punch may set the metal at the bend. It would be useless to bottom against the flat area of the sheet metal because they are not stressed and do not cause springback. Bottoming must be carefully controlled when adjusting press ram or the forced involve will rise at rapid rate.

Stretch bending consists of stretching the blank so that all the metal is stressed past the yield strength. The blank is then forced over the punch to obtain the desired contour. This prestressing before bending results in very little springback. Only relatively large radius is bent because sharp radius would take the prestressed metal beyond the ultimate tensile strength. The sheet metal must be uniform in strength. Stretching bending is most frequently done with a special hydraulic machine rather than with a die in a press.

1.3 PROBLEM STATEMENT

Sheet metal stamping plays a major role in many industries today. As part components get smaller and tolerances get tighter, the dimensional accuracy of a stamped part becomes a crucial factor in determining the overall quality of the part. In most, if not all, sheet metal forming processes, springback is the major problem faced. Springback often complicates the design of forming dies, and final die designs may only be accomplished after fabrication. This poses significant problems to designers, who must accurately assess the amount of springback which occurs during a forming process so that a final desired part shape can be obtained.

1.4 OBJECTIVES

1. To conduct on experimental design in order to find a suitable punch or dies that can overcome the springback of the part in required U bending.
2. To validate the resulting springback using hyperform simulation and compare with resulting on experiment.

1.5 SCOPE OF THE PROJECT

1. U-bending analysis based on hyperform software
2. To conduct experiment on sheet metal bending.
3. Analyze and compare the simulation and experiment result.

CHAPTER 2

LITERATURE REVIEW

2.1 INTRODUCTION

This chapter will discuss about the types of bending and material. It also discuss about meaning of springback, yield point and ultimate tensile strength. Bending, springback and related equations are among the interested terms in this chapter. The source from literature review is from journals, articles and books. Literature review is done to provide information about previous research and that can help to smoothly run this project.

2.2 THEORY OF SHEET METAL BENDING

A process by which metal can be deformed by plastically deforming the material and changing its shape is called bending. The material is stressed beyond the yield strength but below the ultimate tensile strength. The surface area of the material does not change much. Bending usually refers to deformation about one axis. [2]

Bending is a flexible process by which many different shapes can be produced. Standard die sets are used to produce a wide variety of shapes. The material is placed on the die, and positioned in place with stops and or gages. It is

held in place with hold-downs. The upper part of the press, the ram with the appropriately shaped punch descends and forms the v shaped bend.

In sheet metal we can use it to bend. Not all sheet metal has a correct angle when it was bending. This phenomenon calls spring-back. Spring-back occur until residual stress forces are balanced by the material's stiffness. There are some factors that affect spring-back such as higher material strength, thinner material, lower young's modulus, larger die radius, greater wipe steel clearance, less irregularity in part outline and flatter part surface contour. Spring-back parameters are mainly influenced by the following factors punch and die radius, punch and die angles, initial clearance, friction conditions, blank holder force, draw beads geometry, sheet thickness, elastic modulus, Poisson's coefficient, blank material and constitutive behavior of the material in plastic field.

2.3 TYPE OF BENDING PROCESS

A bending tool must be decided depending on the shape and severity of bend. Following are the different types of bending commonly used for precision sheet metal bending. [1]

(a) "U" Bending
(b) "L" Bending
(c) "V" Bending

2.3.1 U- BENDING

U-bending is performed when two parallel bending axes are produced in the same operation. A backing pad is used to force the sheet contacting with the punch bottom. It requires about 30% of the bending force for the pad to press the sheet contacting the punch. Figure 2.1 shows an example of U-bending process.

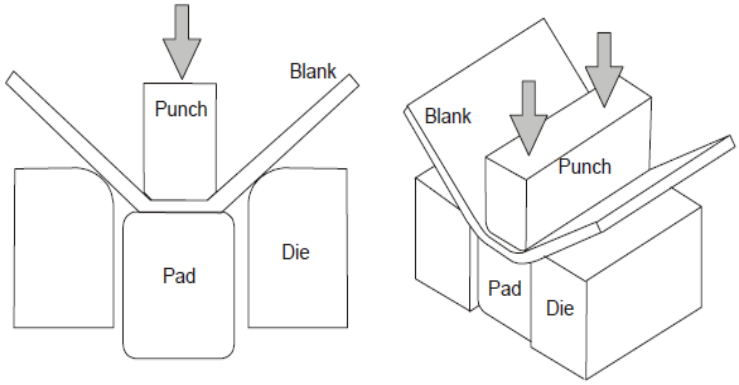

Figure 2.1: Diagram of U-bending process (Source: Diegel, 2002)

2.3.2 L- BENDING

Wiping die bending is also known as flanging. One edge of the sheet is bent to 90º while the other end is restrained by the material itself and by the force of blank holder and pad. The flange length can be easily changed and the bend angle can be controlled by the stroke position of the punch. Figure 2.2 shows of L-bending process.

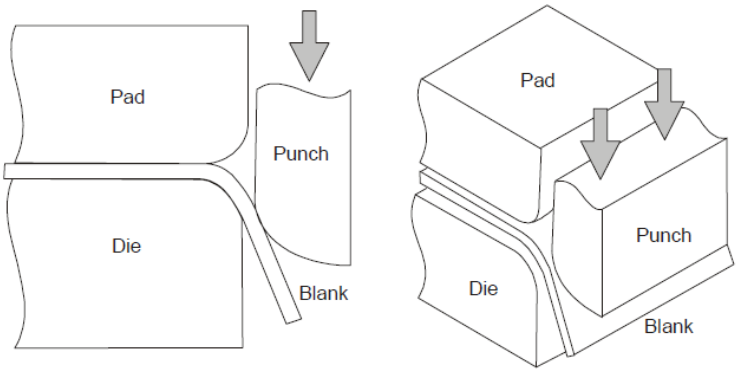

Figure 2.2: Diagram of L-Bending (Source: Diegel, 2002)

2.3.3 V-BENDING

Figure 2.3 shows of V-bending process. In V-bending, the clearance between punch and die is constant (equal to the thickness of sheet blank). The thickness of the sheet ranges from approximately 0.5 mm to 25 mm.

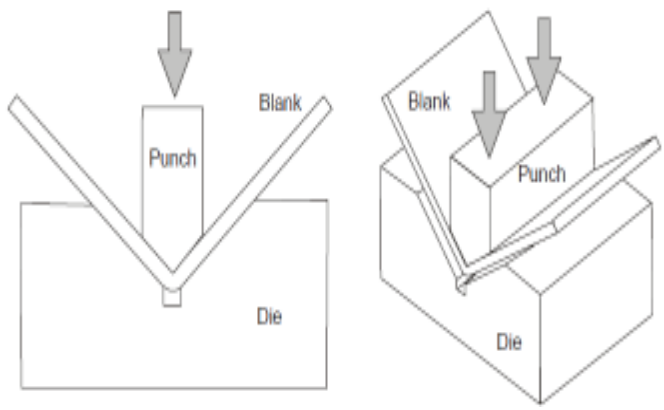

Figure 2.3: Diagram of V-bending process (Source: Diegel, 2002)

2.4 BASE EQUATION OF BENDING FORCE

The equation for maximum bending force is,

$$F_{\max} = k\frac{(UTS)Lt^2}{W} \qquad (1.0)$$

Where k is a factor taking into account several parameters including friction, and *L* and *t* are Length and thickness of sheet metal respectively. The variable W is opening width of a V-die or Wiping die. [1]

2.5 STRESS-STRAIN CURVE

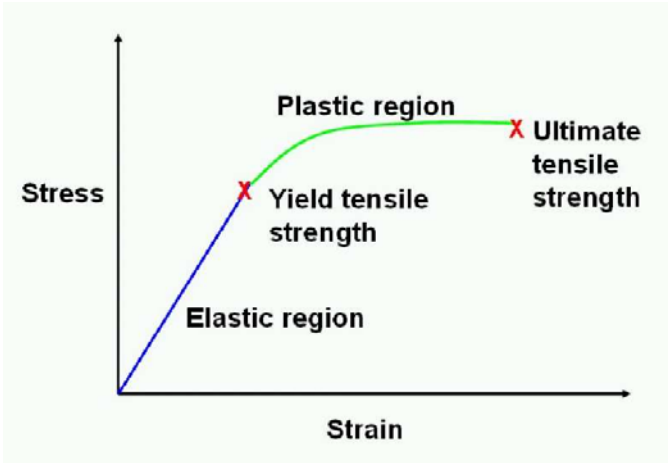

Figure 2.4: Stress-Strain curve

2.5.1 Yield Point

The yield point is that point when a material subjected to a load, tensile or compression gives and will no longer return to its original length or shape when the load is removed. Some materials break before reaching a yield point, for example, some glass-filled nylons or die cast aluminum. To try to further visualize this property, take a piece of wire and slightly bend it. It will return to its original shape when released. Continue to bend and release the wire further and further. Finally, the wire will bend and not return to its original shape. The point at which it stays bent is the yield point. The yield point is a very important concept because a part is usually useless a material has reached that point. [12]

2.5.2 Ultimate Tensile Strength

Ultimate tensile strength (UTS), often shortened to tensile strength (TS), or ultimate strength, is the maximum stress that a material can withstand while being stretched or pulled before necking, which is when the specimen's cross-section starts to significantly contract. Tensile strength is opposite of compressive strength and the value can be quite different. The UTS is usually found by performing s tensile test and recording the stress versus strain and the highest point of the stress-strain curve is the UTS. It is an intensive property, so its value does not depend on the size of the test specimen. However, it is dependent on other factor, such as the preparation of the specimen, the presence or otherwise of surface defects, and the temperature of the test environment and material. [12]

2.6 Plane Stress

Plane stress is defined to be a little of stress in which normal stress σ_z and shear stress σ_{xz} and σ_{yz} directed perpendicular to the x-y plane one assumed to be zero. The geometry of the body is essentially that at a plate with one dimension much smaller than the others. The loads applied uniformly over the thickness of the plate and act in the plane of the plate. The plain stress condition is the simplest form of behavior for continuum structures and represents situation frequently encountered in practice. [8]

2.7 Plane Strain

Plane strain is defined to be a state in which the strain normal to be x-y plane, ε_z and the shear strain γ_{xz} and γ_{yz} are assumed to be a zero. In plane strain, one deals with a situation in which dimension of the structure in one direction, say z-coordinate direction is very large in comparison with the dimension of structure in the other two directions (x and y coordinate axes). The geometry of the body is

essentially that of a prismatic cylinder with one dimension much larger than others. The applied force acts in the x-y plane and do not vary in the z-direction, for example the load uniform distributed with respect to the large dimension and act perpendicular to it. Some important practical application of this representation occur in the analysis of dam, tunnels and geotechnical works also such small scale problem as bar and roller compressed by forces normal to their cross section one amenable to analysis to this way. This report will used a plane strain in simulation in springback. [9]

2.8 SPRINGBACK

Springback is the elastically-driven change in shape of a part upon unloading after forming, is a growing concern as manufacturers increasingly rely on materials with higher strength-to-modulus ratios than the traditional low strength steel [3]. Effect of springback is by changing the shape and dimension which is create major problem in the assembly.

The springback deformation of sheet metal parts is natural result of a sequence of deformation experienced in metal forming process. As the sheet metal slides over a die shoulder, it undergoes bending-unbending deformation developing cyclic bending loads on the sheet sections, and as a result an unbalanced stress distribution is developed over the thickness. [3]

There are two terms that are important in springback namely; springback controlling during forming and springback prediction in die design stage. Springback may not be categorized as a defect. However this geometrical discrepancy can cause ill-fitting in part assembly and geometric deviation of the intended design. If springback could be predicted, the tool and die could be accurately designed and built. There are many factors could affect springback in the

process, such as material variation in mechanical properties, sheet thickness, tooling geometry, processing parameters and lubricant condition. [1]

2.8.1 Springback On Sheet Metal U-Bending

The figure 2.5 shows the non-uniform distribution of stress in cross-section during forming process will change the part profile and cause springback when the loading is removed. For U-bending, springback happens only in the regions II, III and IV, while the regions I and V remain to be flat before and after the loading are removed. Assuming that the unloading does not cause reverse yielding, the deformation in springback is equivalent to the deformation by adding a reverse bending moment -M in corresponding region.

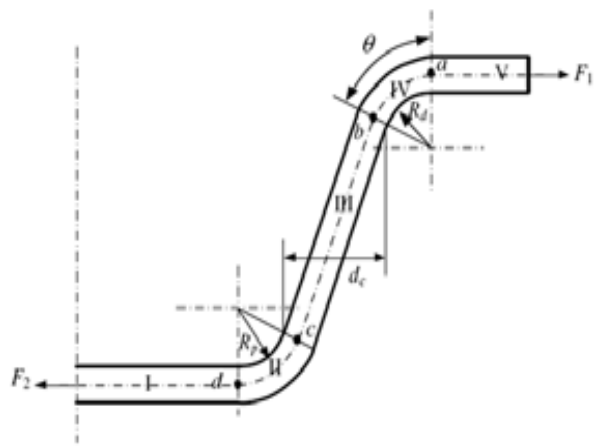

Figure 2.5: Deformation region on U bending. [4]

2.8.2 Springback Prediction Technique

Various experimental technique and procedures have been developed to study springback. The most commonly used techniques are U-bending, V-bending, cylindrical bending and flanging. These methods served large level of

springback and can be easily measured. Usually by these techniques, the basic parameters such as R/t ratio (tool radius to sheet thickness), geometric parameters of the tools, mechanical properties of sheet material and the friction parameters are studied. The major drawback of these experiments is that they cannot imitate process conditions that take place during sheet metal forming.

Experiments were carried out using a specially designed stamping apparatus and the explicit to implicit sequential solution technique was utilized in the numerical simulations. Based on the experimental and numerical results, significant insight was obtained for high strength anisotropic steels that can increase their industrial viability.

The U-shaped cross-sections presented in NUMISHEET''93 in figure 2.6 was selected for this study, because it is a benchmark problem for isotropic springback analyses. For the U-shaped geometry there is a standard method to measure springback figure 2.7 shows details of the actual geometry investigated in the experimental and numerical analyses, and the variables that will be used to measure springback. [13]

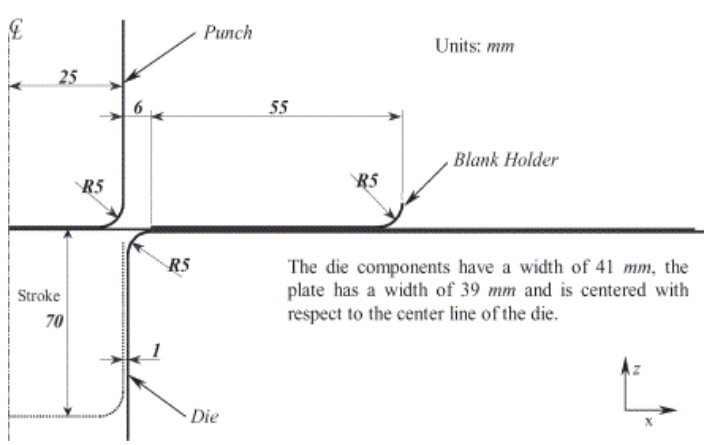

Figure 2.6: Details of NUMISHEET''93 benchmark. [13]

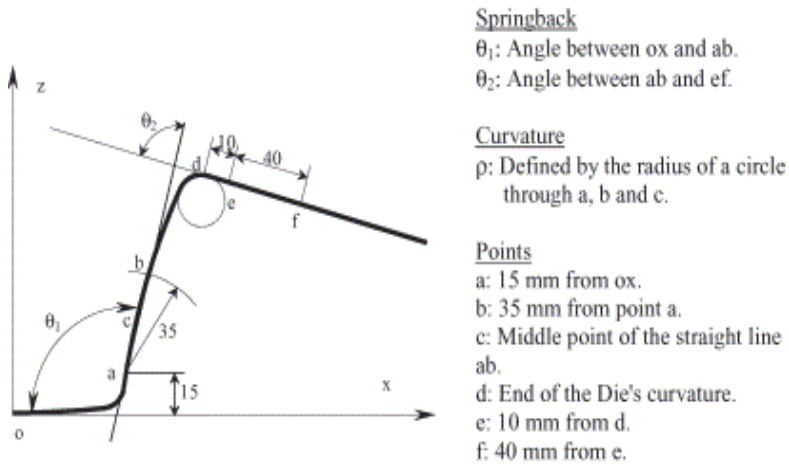

Figure 2.7: Measurement parameters for springback. [13]

Springback is the amount of elastic distortion a matrial has to go through before it becomes permanently deformed, or formed. It is the amount of elastic tolerance, which is to some extent present in every material, be it a ductile, annealed metal or a hard-strength maraging steel. In ductile materials, the springback is much lower than in hard metals, with dependence on the modulus of elasticity (also called Young Modulus) of a particular material. The amount of springback increases with greater yield strength or with the material's strain-hardening tendency. Comparably, the springback of low-strength steel material will be smaller than that of high-strength steel and springback of aluminum will be two or three times higher yet. [6]

Springback occurs in all formed or bent-up parts on release of forming pressure and withdrawal of the punch. The material, previously held in a predetermined arrangement by the influence of these two elements, is suddenly free from outside restrictions and immediately makes an attempt to return to its original shape and form.

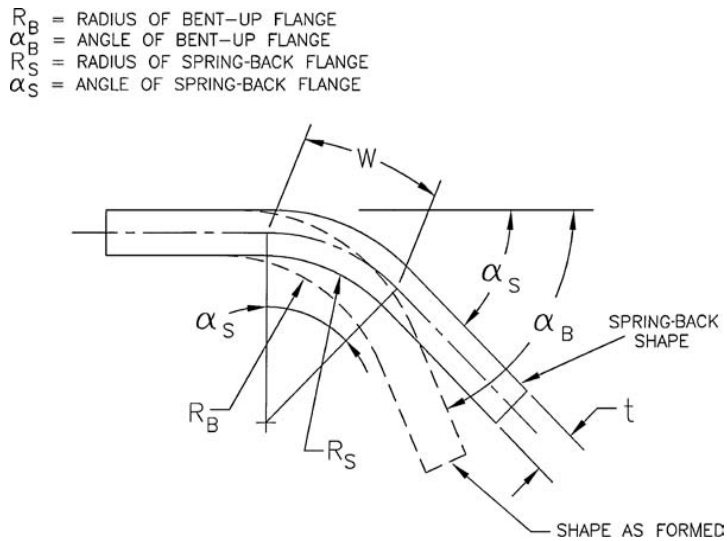

Figure 2.8: Springback

The angle of the bent-up flange α_B is greater than that altered by springback α_S The same way, the radius R_B increases on becoming affected by the springback R_S. However, the length- wise portion W, which is the length of the arc, remains the same. Its relationship to other areas of significance is given as:

$$W = \alpha_B\left(R_B + \frac{t}{2}\right) = \alpha_S\left(R_S + \frac{t}{2}\right) \tag{1.0}$$

From this relationship, a spring-back factor K can be obtained:

$$K = \frac{R_B + \frac{t}{2}}{R_S + \frac{t}{2}} \tag{1.1}$$

Usually springback can be found between 0.9 and 1.0 for bends, using small bend radius. Equation (1.1) was proved true for bends with large bend radius or for those

with small bend angles. However, with small bend radius, it may be considered valid only if the bend angle has a greater than 45° bending angle. For small bending angles and sharp bend radius, the spring back is usually quite large. Values of spring back for steel are shown in Table 1.0. Shown in Fig. 2.8, the yield stress of material is exceeded at a certain point, at which moment the whole deformation so far attained is elastic, or a springback. Should we release the pressure at that moment, the material will return to its normal shape [6].

Figure 2.9 shows force elongation the effect of work hardening and springback. To exceeds the material's elastic limitation, as we arrive at a point "A." A line parallel to the material forming line can be drawn from this point and its horizontal difference from the point "A" is the value of springback. Additional forming causes the material to become work-hardened, which moves us to the point "B." Here, the material's springback is greater, enhanced by work hardening qualities of the steel. The slope of the material's forming line is dependent on the Young modulus. It is therefore pertinent to always specify the steel (or any material for that purpose) to be ordered within the same yield strength range. A difference in yield strength will definitely produce variations in forming, in work hardening, and in the final outcome of metal stamping process. [6]

Angle of the bend	Condition of material	Ratio *R/t*				
		1	2	4	6	10
30°	Annealed	1	1	3	4	7
30°	Hard	0	2	5	8	14
60°	Annealed	0	1	2	3	5
60°	Hard	0	1	3	5	8
90°	Annealed	0	0	1	2	4
90°	Hard	−1	0	2	3	7
120°	Annealed	−1	0	0	1	3
120°	Hard	−1	0	1	2	4

Table 1: Springback Value For Steel Material

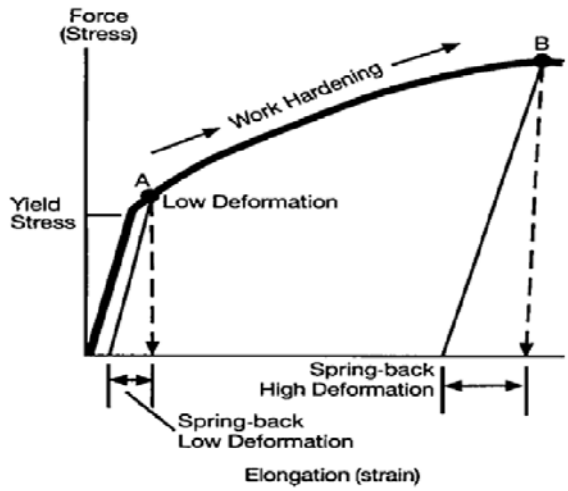

Figure 2.9: Force elongation diagram showing the effect of work hardening and springback[5]

2.9 FINITE ELEMENT ANALYSIS

Numerical simulation was used in finite element method prior tool to prevent the undesirable effects of materials technological processing. This method is not only capable to lowering the cost and shortening delivery periods, but also supporting in achieving the higher quality. The use of finite element analysis is beneficial in the design of tooling in sheet metal forming operation because it is more cost effective than trial and error. The purpose of analysis is to assist the design by predicting the material deformation, including the forces and stresses necessary to execute the forming operation.

Finite Element method is a method to find the solution of the continue structure. The continue structure is divided into small elements that are discrete. Then the elements are considered to apply a functional approach to a particular variable. The continue structure may occur in solid, liquid or gas form. In the application of metal forming processes, the continue structure of material is the metal which are including the mechanism of variable.

First introduction to of the finite element was determined by Clough in 1960. Before that, the idea of it has been expanded by Greenstadt in 1959. The approaches base on cell, not the point of the continue structure. Basically, he divided the solution into a row of interconnected sub cell. Where, he applied a discrete function of every cell and an interpolation function which is used for continuity in the entire cell. [7]

Plastic deformation was introduced at the end of 1970, in which nonlinear analysis be adopted. Start with the implement of the membrane elements in the formulation of elastic-plastic material. Around 1980, study of the membrane identified inadequate to show sheet metal behavior. Then the shell element is applied, and focuses on applications and modeling techniques rather than the mathematical approach.

In modeling of metal forming, there are two important things have to be considered, which is the dynamic factor and non-linearity (plasticity). The dynamic factor for the formation of the metallic material involves the flow of material and movement of the tool. While nonlinear factor caused by the deformation of plastic, which does not comply with Hooke Law. Recently, the FEM became a standard procedure in metal forming industries, particularly during the planning and product development.

CHAPTER 3

METHODOLOGY

3.1 INTRODUCTION

This chapter introduces the overall methodological approach that is used in the project. In this project, several methods were used to complete the project and it will comprise all the methods and processes that will use in order to achieve our objectives which are design the suitable punch or die to overcome springback on U-bending die. To started this project with finding all material that related with project title for study and research such as journal, article and books.

After the research and study have been made, it followed with project planning. In this process have made a prediction and determine for the next process that needs to take in order to smooth the project progress. Through this chapter also, the full explanation for all process and tool that involved to experimental design the punch or die to overcome springback of the part that required on U bending.

Below are the process flow chart for implement the project and flow chart for the methodology processes which focus on experimental design suitable the punch or die. This methods used were have three design concept are highlighted. The three designs have different shape, radius and angle.

3.2 FLOW CHART OF METHODOLOGY

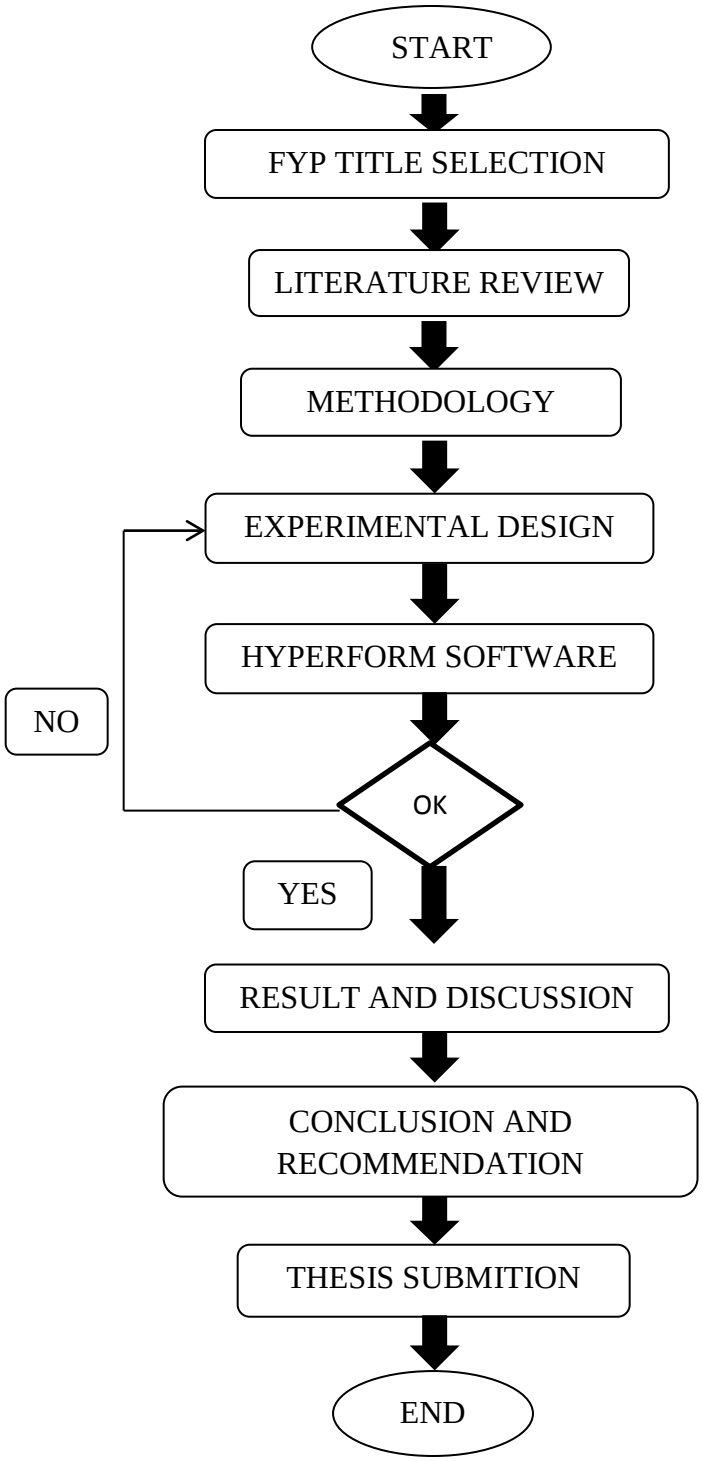

Figure 3.0: Flow chart of methodology

3.3 PROCESS FLOW CHART

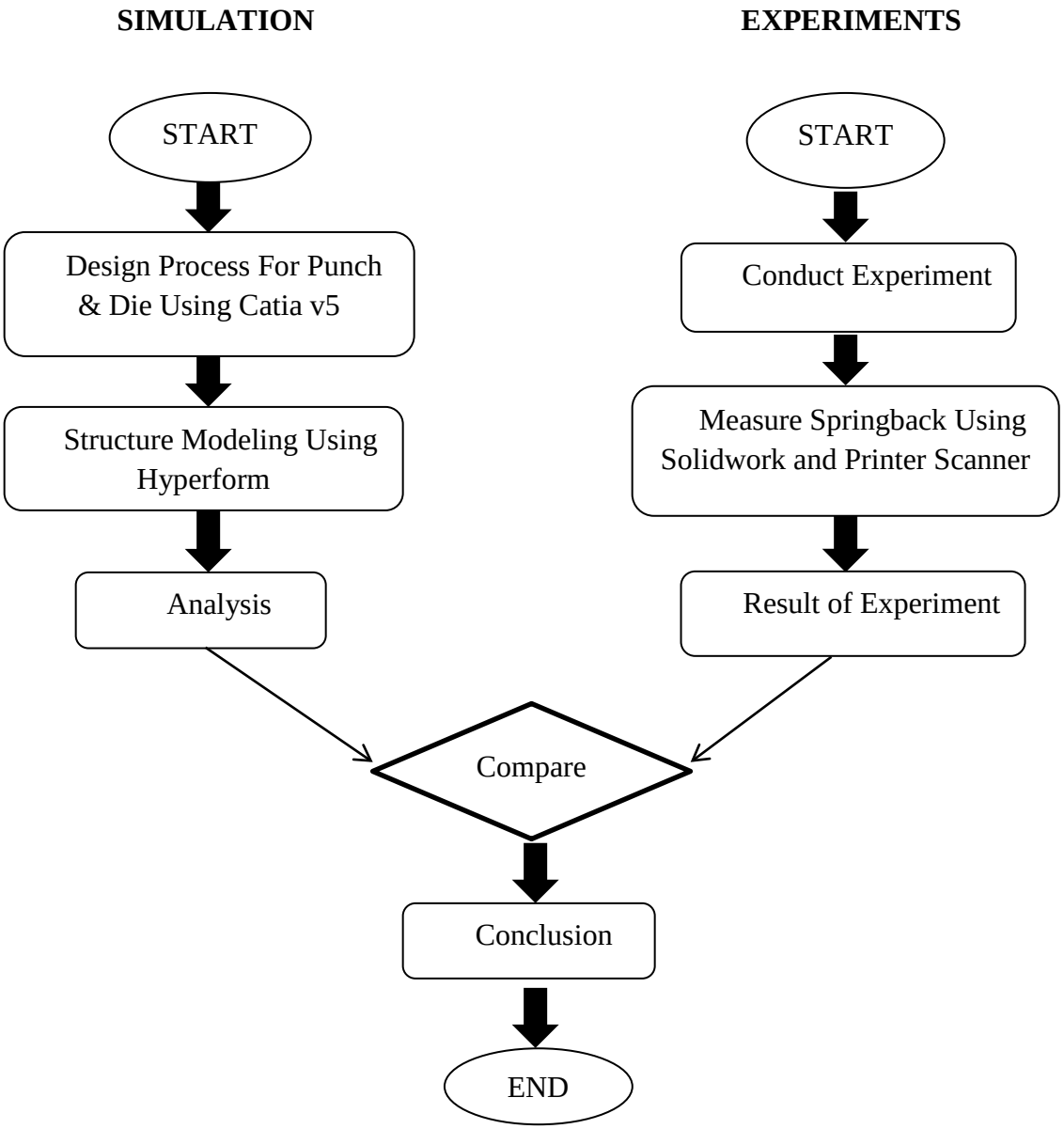

Figure 3.1: Process flow chart of simulation and experimental design punch or die

3.4 LITERATURE REVIEW

Regarding to figure 3.2, which show the process flow to experimental design and using simulation software. Gather all the information and do research about title such as a review about the overcome springback on U bending, parameters involves and software used. These tasks have been done through research on the books, journals, technical reports and other sources. Then it will come out with the related data and findings that we can use in order to design the punch or die.

3.5 DESIGN PROCESS

In this section it has will compile all the data and information that related with design of punch and die. Moreover, the springback of sheet metal should be taken into consideration in the bending die design. The amount of springback should be known in order to produce bend sheet metal part within acceptable tolerance limits. The first step is to figure the size of every punch and die. Then every punch and die each has different clearance and also have different punch and die corner (R).

After that, define and decide the suitable material to design the punch and die. After all the information, data and rough design have been made, to start design the punch or die by using the CAD modeling software. This software is the high quality and performance compared to other software and industries nowadays prefer the use of Cad modeling in doing designing process.

3.5.1 Design Concept

Sketching is the simplest form of drawing and also one of the fastest ways to express ideas and creativity. This concept design of punch and die was modeled in CAD modeling. Using this software, it has three designs of punch and die. Generally, the three designs have different design such as shape, radius and angle for punch and die. Each of design have their own reason why it build, means that the every design have their own ability and specification that will be compare within each other in order to get the suitable design.

3.5.2 Design Concept A

This concept called die fillet for corner setting. In some critical instance, this method may not be permissible because of the strength loss in the bend area of the workpiece. In many cases, this negligible but in some it is objectionable. If the method is undesirable for a specific application, the die maker may resort to overbending or to the die fillet method. Here, the set is achieved by squeezing the stock material against the outer surface of the bend area. This method is sometimes referred to as a developed set, because the die fillet radius (RR) must be developed to suit the thinning of the stock material in the bend area. This die has radius (R) of 3 mm at the top and at the bottom has radius (RR) of 4.25mm. This calculation using formula RR= 5/4T + R. However, the punch has radius of 3mm at the bottom. The clearance between die and punch is 1mm for each side.

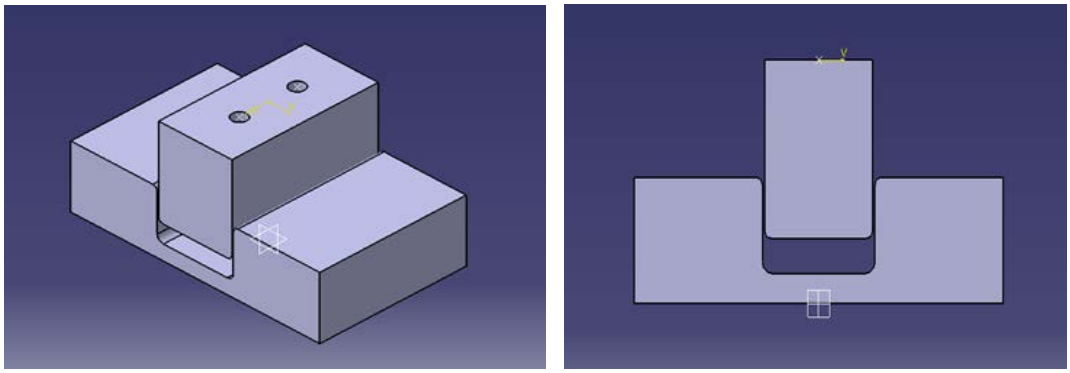

(1) (2)

Figure 3.2: (1) Isometric view (2) Front view of assembly design concept A

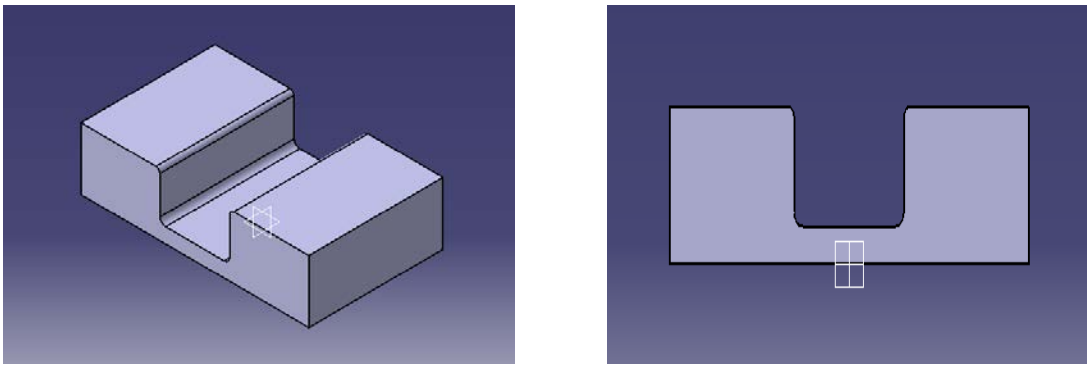

(1) (2)

Figure 3.3: (1) Isometric view (2) Front view for die

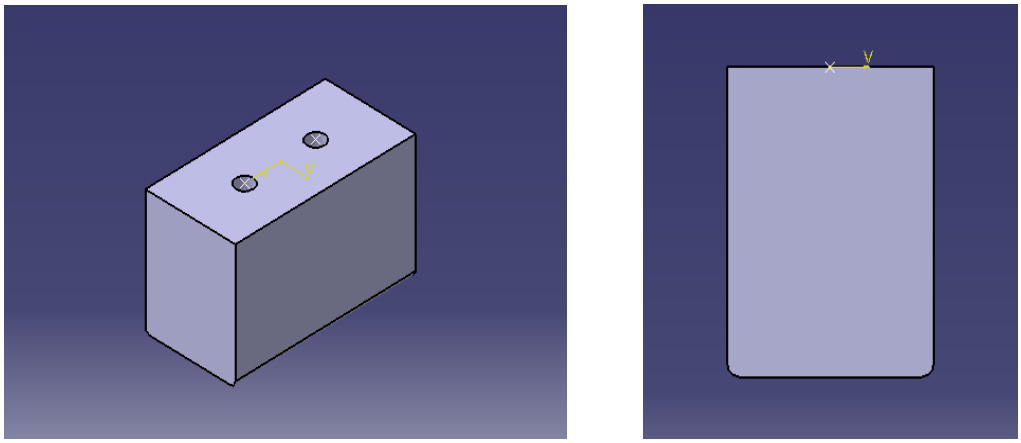

(1) (2)

Figure 3.4: (1) Isometric view (2) Front view for punch

3.5.3 Design Concept B

For large work especially, it will be simpler to proceed as indicated in figure below. Here the top die surface is angled slightly. The vertex of the angle is blended out with a radius R to prevent a setting condition at the center. But it have not included radius R in this concept because the punch does not require a matching radius for R. The die has angle 5° at the bottom and at the top has radius 3mm. Angle in punch may be equal to or very slightly greater than angle at bottom die. The angle of punch is 5°. The clearance between die and punch is 1mm for each side. Here, too the exact die and punch contour are a result of development by the die maker.

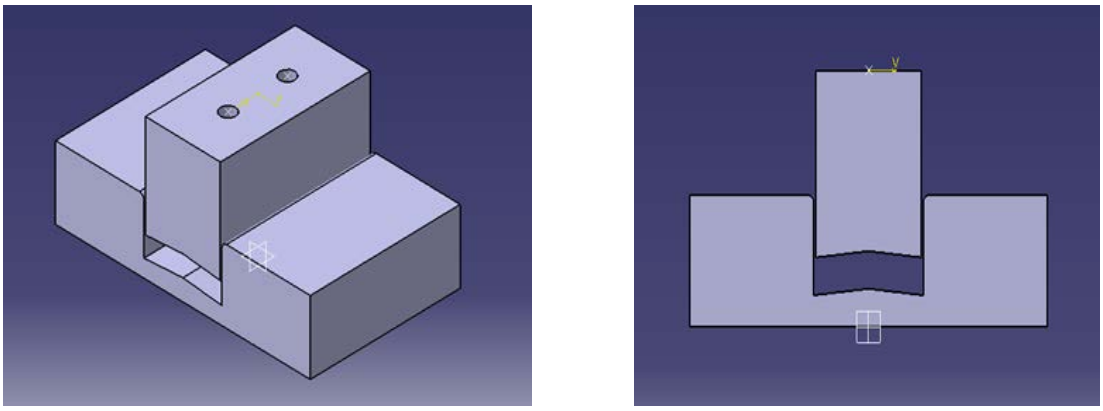

(1) (2)

Figure 3.5: (1) Isometric view (2) Front view of assembly design concept B

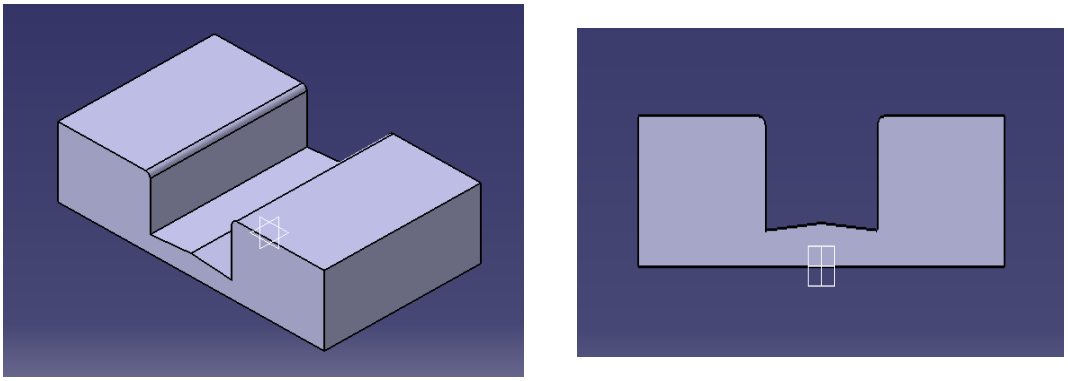

(1) (2)

Figure 3.6: (1) Isometric view (2) Front view for die

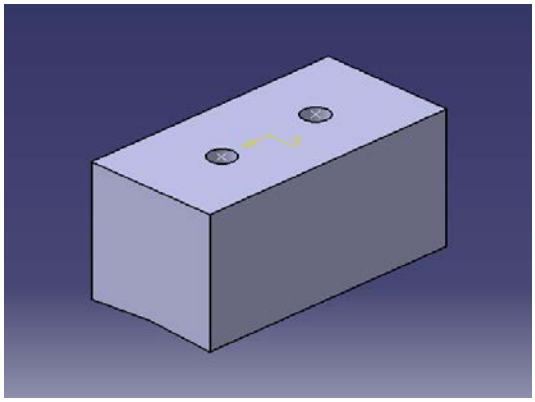

(1)

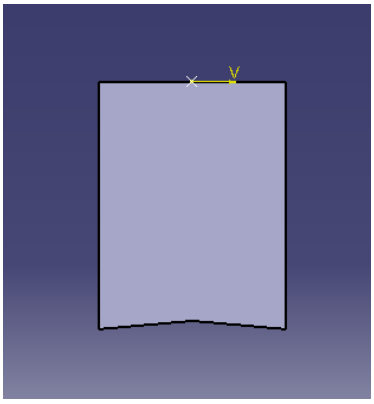

(2)

Figure 3.7: (1) Isometric view (2) Front view for punch

3.5.4 Design Concept C

This concept called punch sidewall relief (angular). But it has another one concept is called punch sidewall relief (straight undercut). But choose the angular because shape of the die easy to design and also to machining using milling compare than straight undercut design. Where the springback is not too pronounced, this concept may be satisfactory. Utter simplicity is of course the keynote of these two expediencies. It should perhaps be noted that the use of relief punch sidewall and the ensuing methods described, are not restricted to either U bends. The die has radius of 3mm for at the top and at the bottom also 3mm. The clearance between die and punch is 1mm for each side. Angle at the punch is 15° for both sides. However, the radius at top and bottom of punch is 3mm.

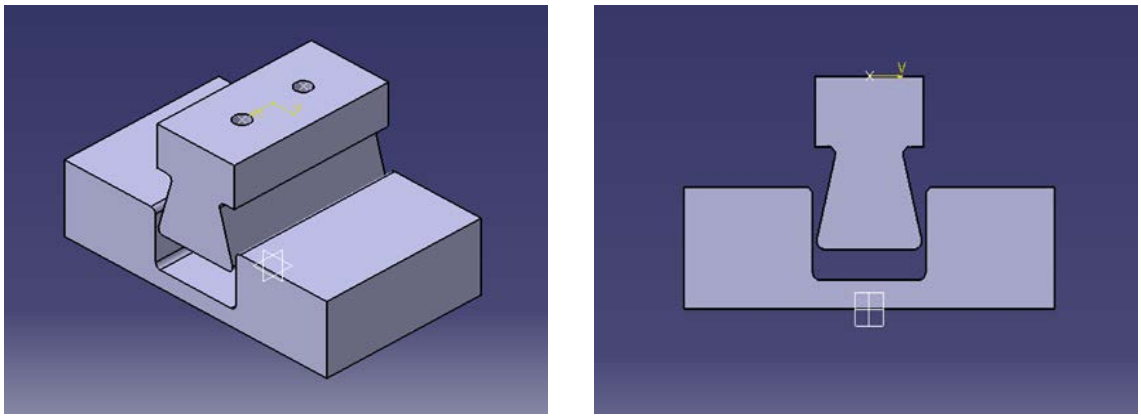

(1) (2)

Figure 3.8: (1) Isometric view (2) Front view for assembly design concept c

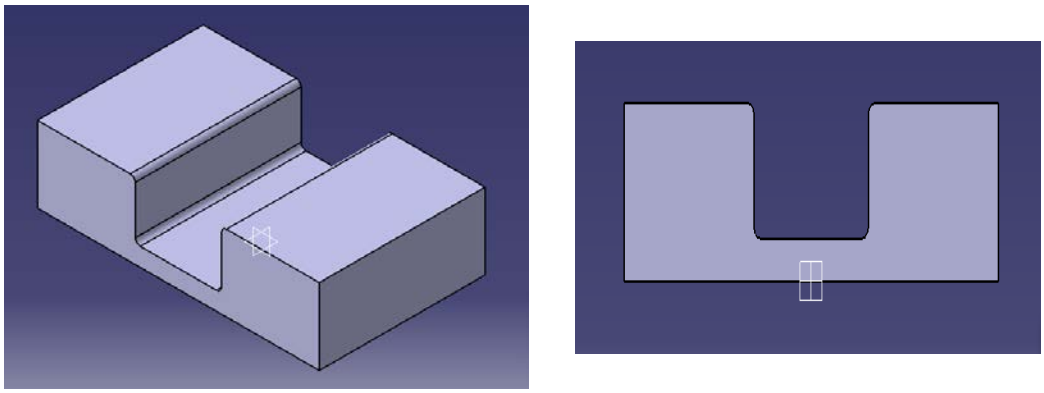

(1) (2)

Figure 3.9: (1) Isometric view (2) Front view for die

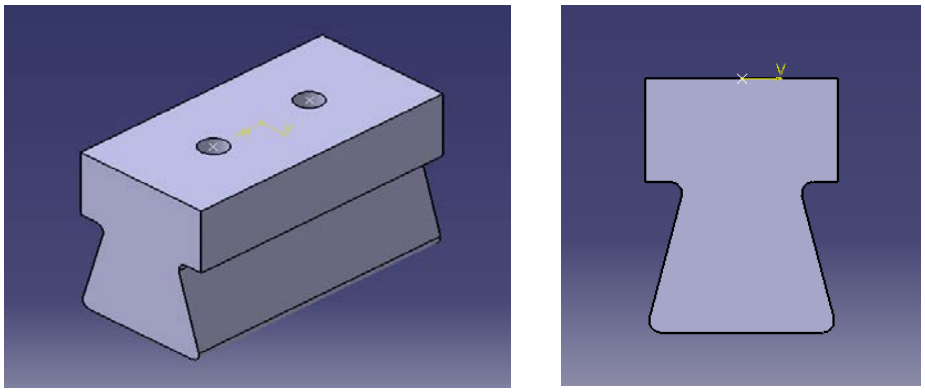

(1) (2)

Figure 3.10: (1) Isometric view (2) Front view for punch

Design	Punch radius (mm)	Punch angle	Die radius (mm)	Die angle	Clearances (mm)
A	3	-	3	-	1
B	5	5°	3	5	1
C	3	15°	3	-	1

Table 2: Summarize all design parameter

3.6 SOFTWARE

In this project, two different types of engineering software will be used hyperform the analysis simulation. A brief explanation of the software is discussed as below:

3.6.1 CAD Modeling Software

Sketching is the simplest form of drawing and also one of the fastest ways to express ideas and creativity. The drafter uses the sketches to help simplify and solve problems. It is also used to illustrate concepts to other people in discussion of mechanical parts and mechanisms. in addition, sketching is necessary in drafting because the drafter in industry frequently sketches ideas and designs before converting them into drawing on CAD.

The product is designed in broad outlines to fulfill its intended function which is to operate satisfactorily over its expected life and to fill the needs of the customer. The design must make the product suitable for manufacture in flexible manufacturing system.

There are many benefits to work with solid modeling software. The most apparent reason is ease of use. If a designer currently working in the 2D world, an immediate benefit would be the ability to see the part as a. 3D image as it is being created. Many mechanical parts contain features that are very difficult to visualize in 2D. Because it is possible to add features directly to a 3D model, it becomes possible to see the model grow and evolve into a creation that is built. For this project, SolidWorks software will be used to create the experiments result to measure the angle. After using the scanner computer and import the picture to solidwork and convert jpeg format.

.

3.6.2 Hyperform Software

In this project, the software to be used is hyperform to analyze the springback analysis, incremental formability analysis, optimize process parameter, blank development and thinning of part on U bending. The Solid models of press tools (die and punch) are imported to the Hyperform and outermost skin profiles are extracted. These extracted surfaces act as die and punch for sheet metal forming simulation.

3.7 EXPERIMENTAL SETUP

After the materials selection needed have been finalize and gather all the information, data and rough design of punch and die have been made using Catia V5 software, we will through the machining process. In this process, there are some suitable methods have been specified to obtain the best and smooth progress within the time given. In the experiment processes have decided to divide the process into two sections which are machining and stamp the sample of U-bending. The process has begun with machining the punch and die using milling machine and wire cut and cutting the sheet metal by doing the shearing machine. Refer table 3 below, that show the model geometry design A, B and C.

	Design A	Design B	Design C
Punch size	50x65x100mm	50x65x100mm	50x65x100 mm
Die size	100x45x170mm	100x45x170mm	100x45x170 mm
Punch radius (mm)	3°	5°	3°
Die radius (mm)	4°	5°	3°
Clearances (mm)	1	1	2
Blank thickness (mm)	1mm	1mm	1mm

Table 3: Model Geometry

3.7.1 Machining Process

After analyze the design using CAD modeling and print out the detail drawing to start the machining. Then the punch or die must be machined used milling machine and EDM wire cut. Figure 3.12 show the EDM wirecut, it can machine anything that is electrically conductive regardless of the hardness, from relatively common materials such as tool steel, aluminum, copper, and graphite, to exotic space-age alloys including titanium, carbide, polycrystalline diamond compacts and conductive ceramics. The wire does not touch the workpiece, so there is no physical pressure imparted on the workpiece compared to grinding wheels and milling cutters. The amount of clamping pressure required to hold small, thin and fragile parts is minimal, preventing damage or distortion to the workpiece. The accuracy, surface finish and time required to complete a job is extremely predictable, making it much easier to quote, EDM leaves a totally random pattern

on the surface as compared to tooling marks left by milling cutters and grinding wheels. The EDM process leaves no residual burrs on the workpiece, which reduces or eliminates the need for subsequent finishing operation.

Figure 3.11: EDM wirecut

3.7.2 Machine And Equipment Use In Bending Process

Figure 3.12 show experiments were conduct with the help of hydraulic press machine that has adjustable time and pressure. Switches to limit the punch stroke can adjust this machine ram. By this way for each material, the punch automatically goes down to a certain level determined by the calculation and then it automatically comes up. Moreover, a simple fixture was used to attach the bending die to the machine.

Figure 3.12: Press Machine

3.8 MATERIAL SELECTION

The researches have investigated all factors about springback in order to minimize springback in bending dies. Springback can be minimize by using suitable die design but cannot be eliminated. One of the most important problems in the die design is to minimize the springback. If the amount of springback is not known for different angle and radius, it has to be determined by experimental design. Many experiments have been done to find out the amount of springback for different material. A simple U-bending die have been design. This because by this way parts with different angles and radius can be produces.

In this experimental, the material selected are stainless steel. Which is the thickness is 1mm and material are 100mm X 90mm. The dimensions of experiments sample are choosing as 100mm x 90mm. The reason selecting the small dimension is because considering the size of punch and die, easy to calculate the springback and low cost of the die.

3.8.1 Stainless Steel

In metallurgy stainless steel, also known as inox steel or inox from French “inoxydable”, is defined as a steel alloy with a minimum of 10.5% or 11% chromium content by mass. Stainless steel does not stain, corrode or rust as easily as ordinary steel, but it is not stain proof. It is also called corrosion resistant steel when the alloy type and grade are not detailed, particularly in the invitation industry. There are different grades and surface finishes of stainless steel to suit the environment to which the material will be subjected in its lifetime. Stainless steel is used where both the properties of steel and resistance to corrosion are required.

Stainless steel differs from carbon steel by the amount of the chromium present. Carbon steel rusts when exposed to air and moisture. This iron oxide film (the rust) is active and accelerates corrosion by forming more iron oxide. Stainless steel contain sufficient chromium to form a passive film of chromium oxide, which prevents further surface corrosion blocks corrosion from spreading into the metal’s internal structure.

CHAPTER 4

RESULT AND DISCUSSION

4.1 INTRODUCTION

This chapter is showing a result from the flow simulation analysis and experimental setup. This analysis used hyperform software to simulated analysis and to help designers, engineers, die makers. From the result of the simulation, the discussions is all about springback result and formability contour from incremental analysis.

4.2 SIMULATION RESULT

4.2.1 Springback Result Product of Design A

For figure 3.13 show steps 1 for springback result product of design A. For step (1), the forces at the product haven't applied. That means the springback not happen at this condition.

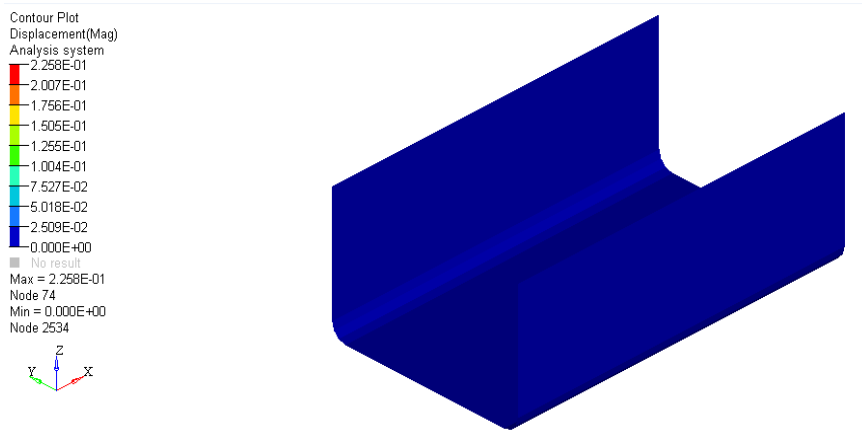

Figure 3.13: Result analysis step 1

Figure 3.15 show result analysis step 2. The stress show at the beginning the plate receive a small value of stress. Based on figure 3.14 shows the minimum value of springback stress is 0.0018Mpa and maximum stress is 126.8Mpa. Only small quantities of nodes receive compression at this point. So the condition inside the plate is compressed highly compound to the outer of plate. The particle at this stage is compress tightly more hitting each other. Meanwhile the outer part of the plate is retracting. The particle of this plate of this step is in tension condition means is separate each other.

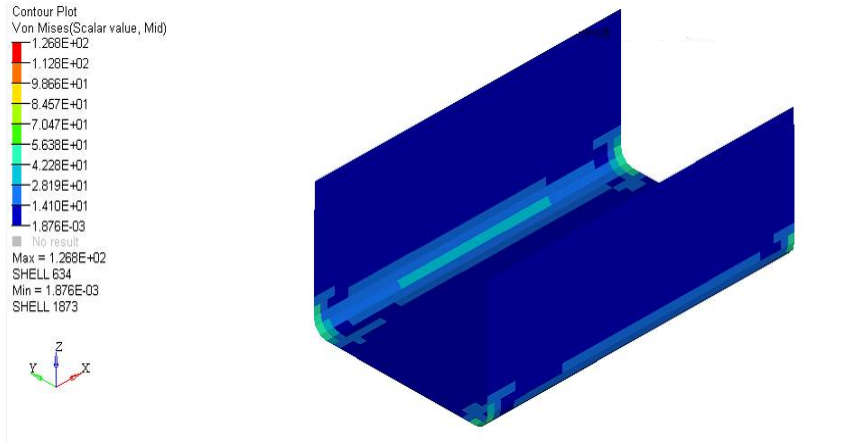

Figure 3.14: Springback stress

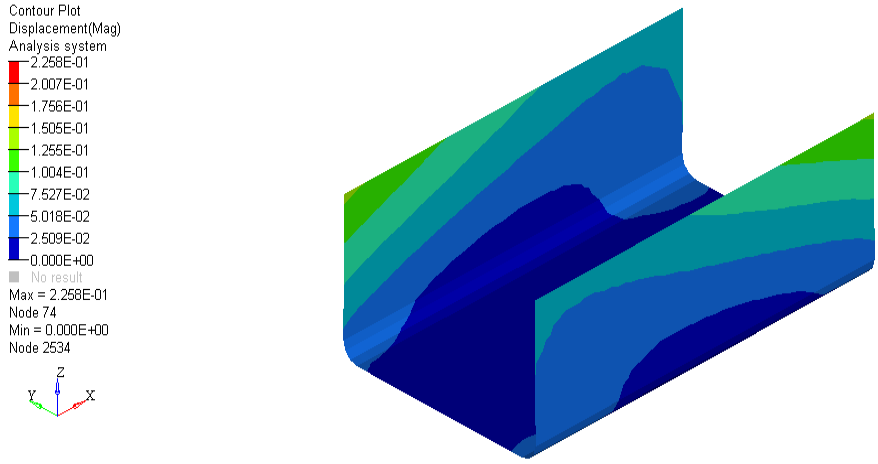

Figure 3.15: Result analysis step 2

Then figure 3.16 show the step 3 for springback result. When punch is pressing the plate is forced to side wall of product. As we can see, the stress shows at area top surface of product A. The value of stress shows in figure 3.14. The minimum stress is 0.0018Mpa and the maximum is 0.0126Mpa.

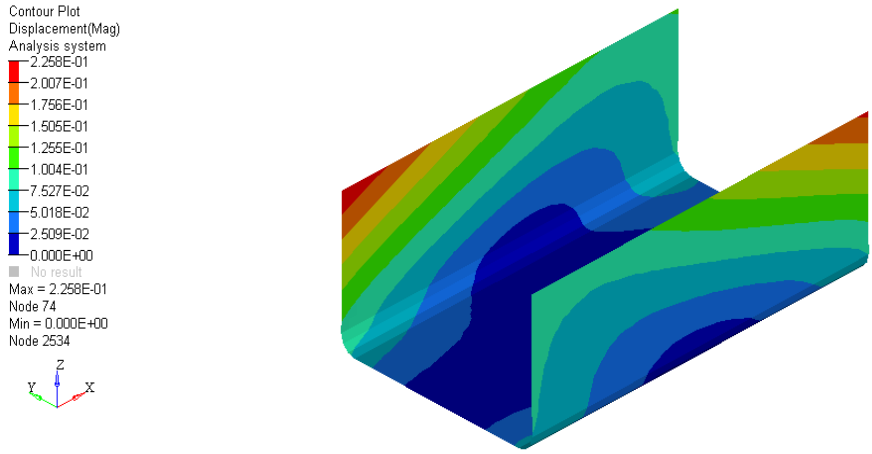

Figure 3.16: Result analysis step 3

Figure 3.17 show the final shape before the punch is released. The punch is pressing until end of the die. At this point also, the springback is occurring on the plate itself. Here, the value of springback for product A is 0.2mm. This pringback result shown from figure below at maximum value of springback.

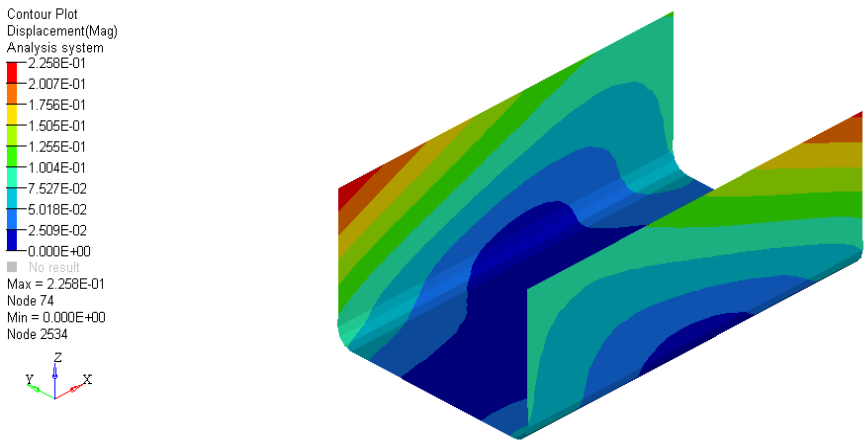

Figure 3.17: Result analysis step 4

4.2.2 Springback Result Product of Design B

For figure 3.17 below show steps 1 for springback result product of design B. This part also same to product A on step 1. The forces haven't to attach and value of springback can't define in this step.

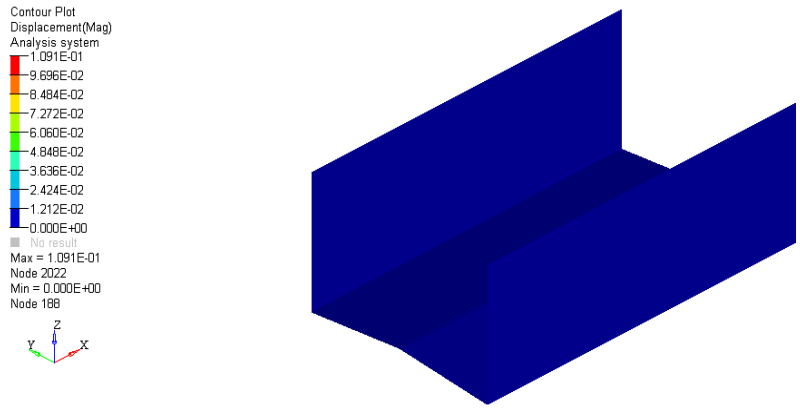

Figure 3.18: Result analysis step 1 for product B

Then figure 3.20 show the step 2. The stress show at the beginning the plate receive a small value of stress. Based on figure 3.19 shows the minimum value of springback stress is 0.000047Mpa and maximum stress is 136.6Mpa. Only small quantities of springback receive compression at this point. So the condition inside the plate is compressed highly compound to the outer of plate. The particle at this stage is compress tightly more hitting each other. The outer part of the plate is retracting. The particle of this plate of this step is in tension condition means is separate each other.

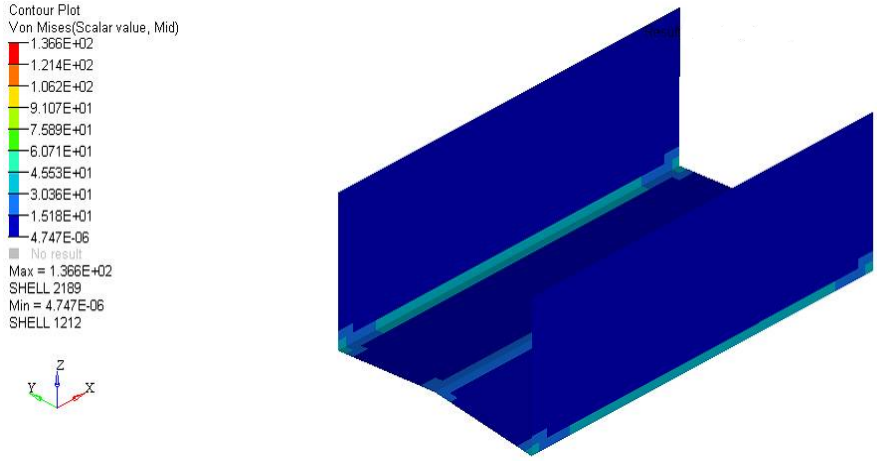

Figure 3.19: Springback stress

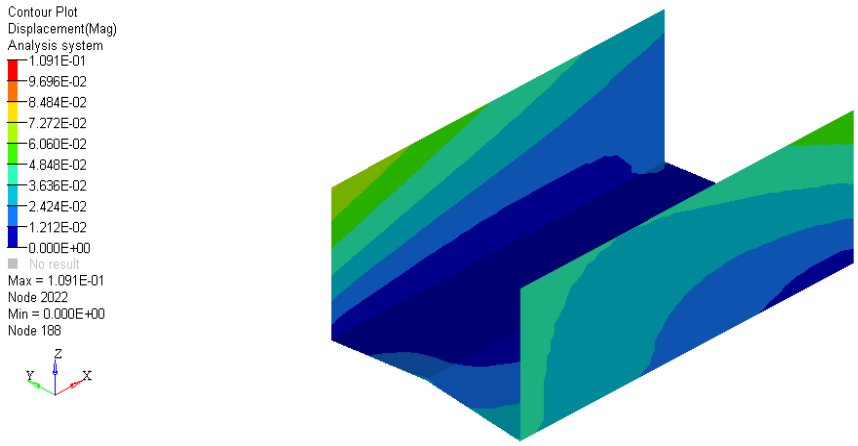

Figure 3.20: Result analysis step 2

Then figure 3.21 show the step 3 for springback result. There have nine displacement colors. Beginning the color blue is minimum and then red color is maximum of springback displacement and the green is safe area. When punch is pressing the plate is forced to side wall of product. Refer the product analysis below, actually is facing a part of bending problem such as thinning will be happen in red color area. The value of stress can refer in figure 3.19 shows that the minimum value of springback stress is is 0.000047Mpa and maximum stress is 136.6Mpa.

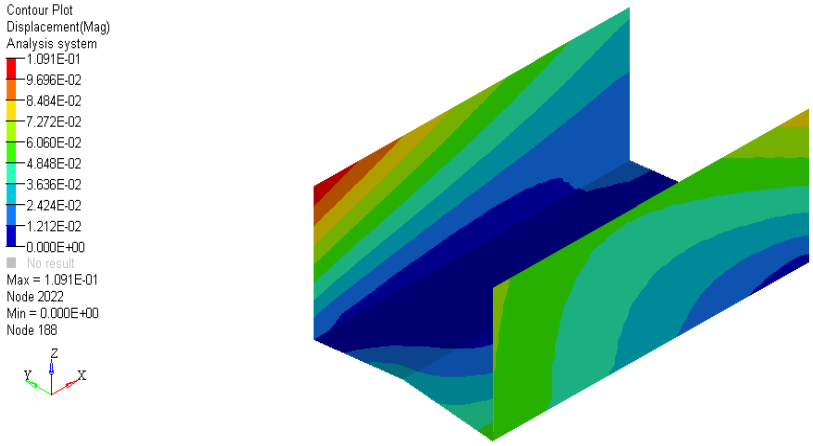

Figure 3.21: Result analysis step 3

Figure 3.22 show the final shape before the punch is released. The punch is pressing until end of the die. At this point also, the springback is occurring on the plate itself. Here, the value of maximum springback for product B is 0.1mm shown from figure below.

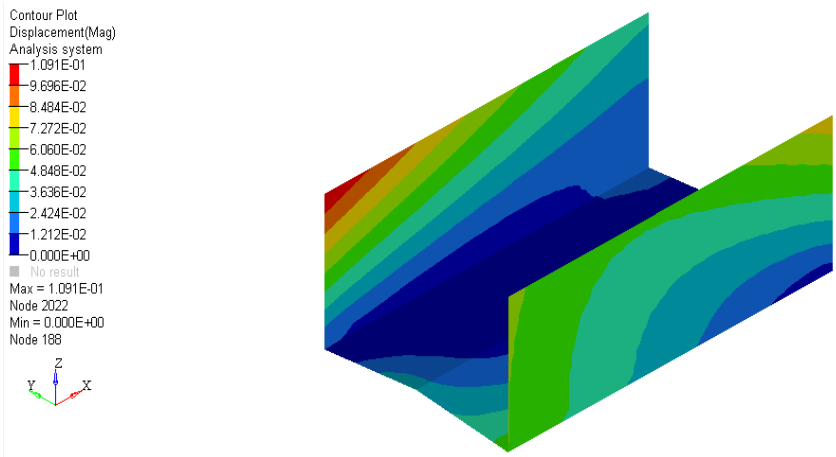

Figure 3.22: Result analysis step 4

4.2.3 Springback Result Product of Design C

For figure 3.23 below show steps 1 for springback result product of design C. This part also same to product B on step 1. The forces haven't to attach and value of springback can't define in this step.

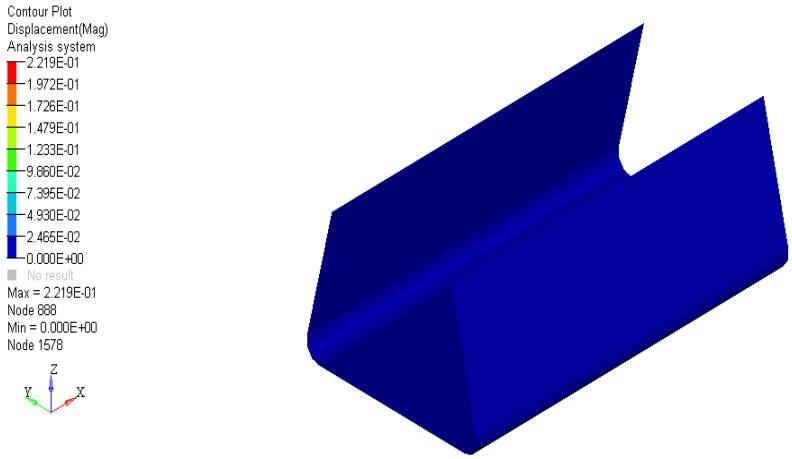

Figure 3.23: Result analysis step 1

Then figure 3.25 show the step 2. The stress show at the beginning the plate receive a small value of stress. Based on figure 3.24 shows the minimum value of springback stress is 0.000516Mpa and maximum stress is 128Mpa. Only small quantities of springback receive compression at this point. So the condition inside the plate is compressed highly compound to the outer of plate. The particle at this stage is compress tightly more hitting each other. The outer part of the plate is retracting. The particle of this plate of this step is in tension condition means is separate each other.

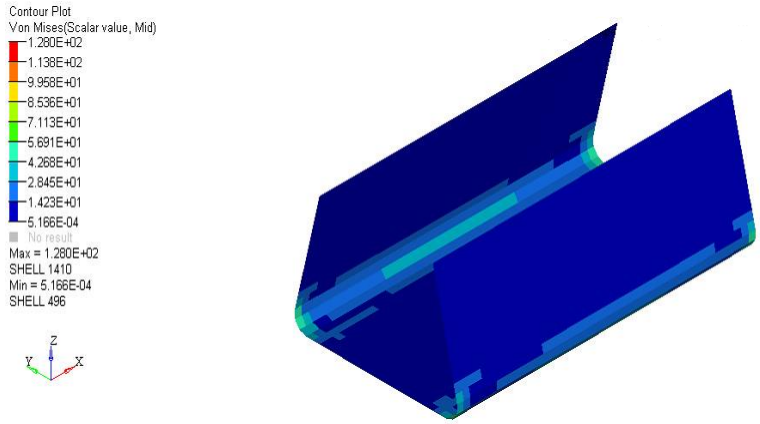

Figure 3.24: Springback stress

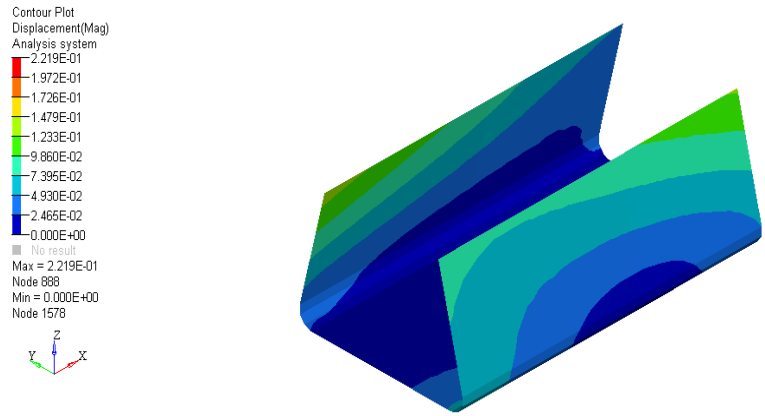

Figure 3.25: Result analysis step 2

Then figure 3.26 below show the step 3 for springback result. When punch is pressing the plate is forced to side wall of product. The product actually is facing a part of bending problem such as thinning at area red color. This area is maximum of springback. The value of stress can refer in figure 3.24 shows that the minimum value of springback stress is is 0.000516Mpa and maximum stress is 128Mpa.

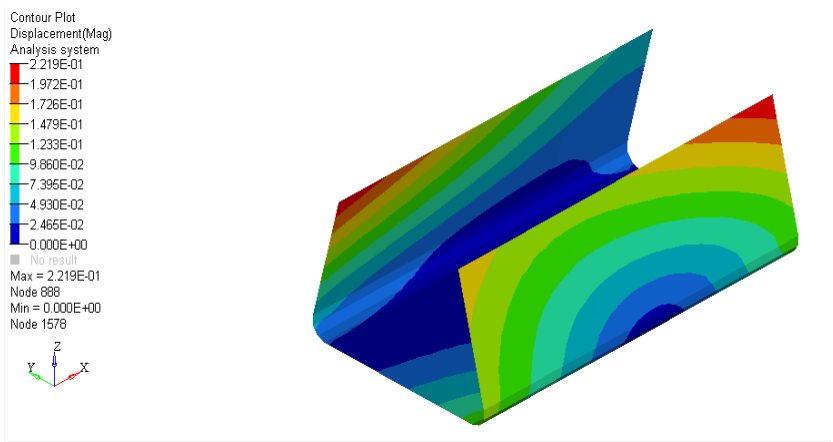

Figure 3.26: Result analysis step 3

Then figure 3.27 show the final shape before the punch is released. The punch is pressing until end of the die. At this point also, the springback is occurring on the plate itself. Here, the value of maximum of springback for product C is 0.2mm same values with product A.

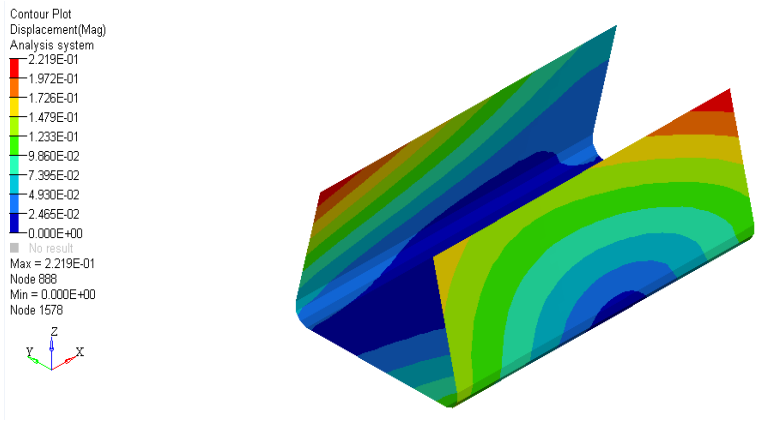

Figure 3.27: Result analysis step 4

From table 4 below show the result of springback for three designs A, B, and C.

Result	Design A	Design B	Design C
Springback result (mm)	Max= 0.2	Max= 0.1	Max= 0.2

Table 4: Springback result

4.3 FORMABILITY RESULT

4.3.1 Formability result product of design A

The blank prediction shows in figure 3.28 below. The stress show at the beginning the plate receive a value of stress at radius plate area show in red color. Then the green color show that a condition is safety and blue color show the stress haven't attach in this area. The blank size based on the blank prediction is 90.85 x 118.22mm and use material thickness is 1mm.

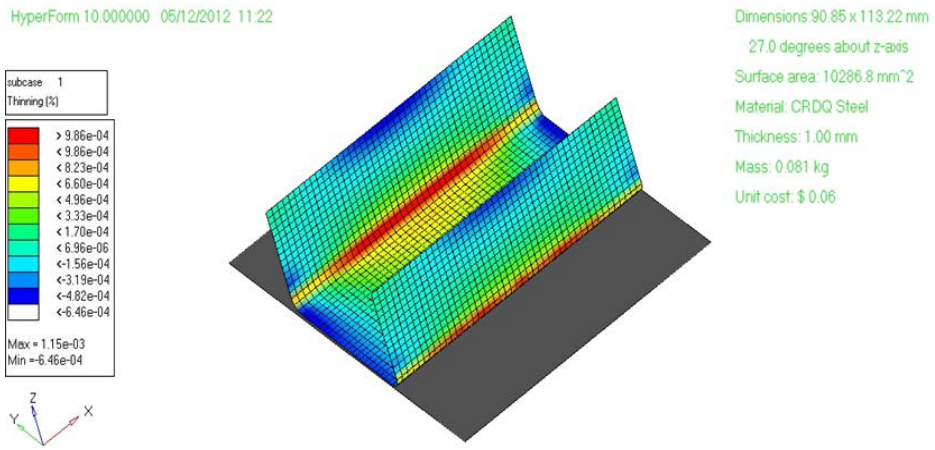

Figure 3.28: Blank prediction

Results of the simulation are interpreted in. Based on the observation, changes are made in the process and tool build parameters. Several iterations are carried out till a satisfactory solution is reached. Figure 3.29 below show the condition the product is in safety.

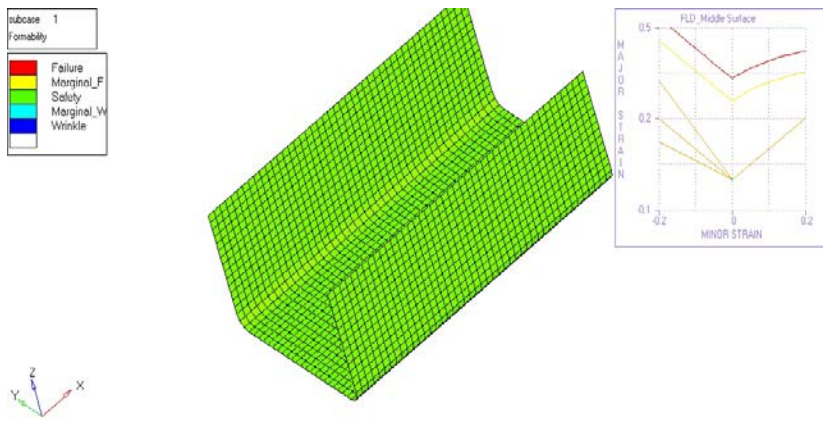

Figure 3.29: Formability contours from incremental analysis

The thinning process shows in figure 3.30 below. The red area represents the occurrence of crack at radius area. It happen may be because the stress applied more in this area. Then also have area risk of crack.

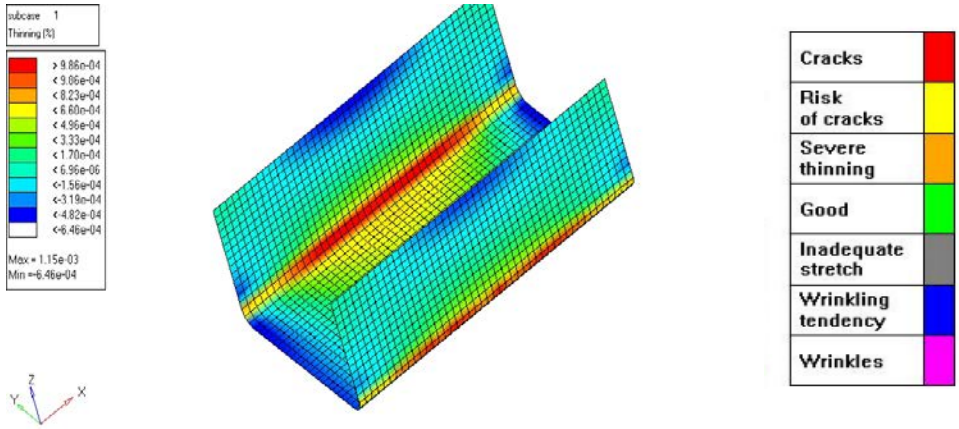

Figure 3.30: Thinning contour from incremental analysis

4.3.2 Formability result product of design B

The blank prediction shows in figure 3.31 below. To start formability analysis, the blank should be predicted first. The blank size based on the blank prediction is 90.86 x 114.79mm and use material thickness is 1mm.

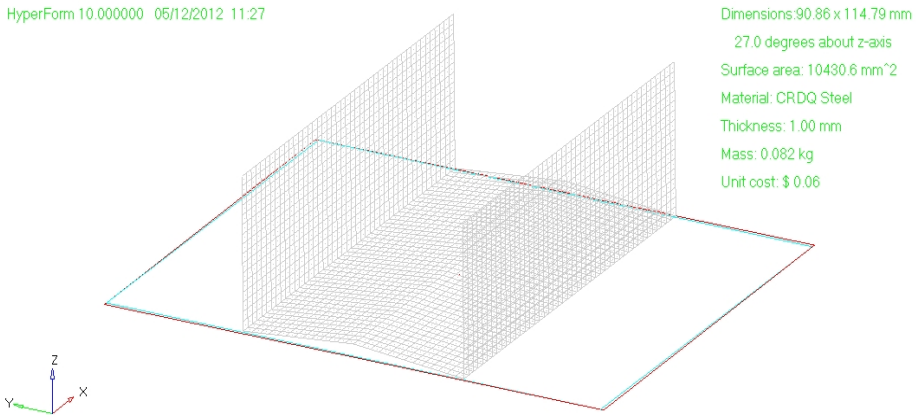

Figure 3.31: Blank prediction

Results of the simulation are interpreted in product design B on formability analysis. Advantages of sheet metal formability software are far more accurate predictions. Based on the observation, changes are made in the process and tool build parameters and to check the formability of the modified component and to develop the blank. Figure 3.32 below show the condition the product is in safety

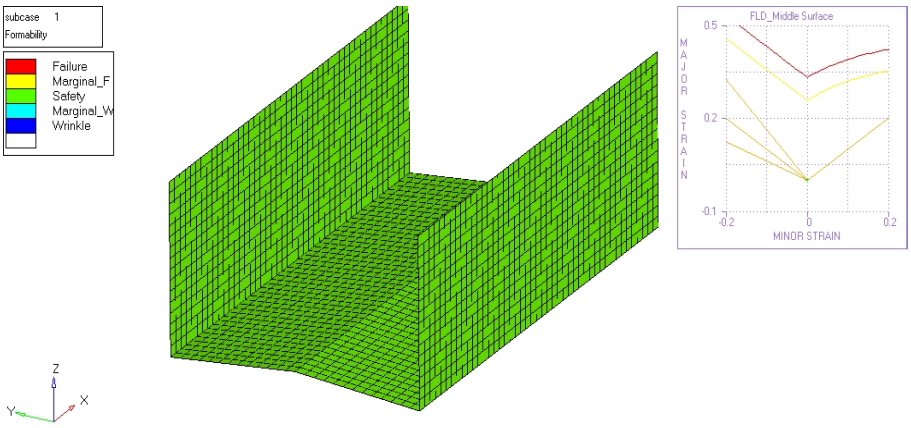

Figure 3.32: Formability contours from incremental analysis

The thinning process shows in figure 3.33 below. Side wall of blank look have wrinkling tendency.

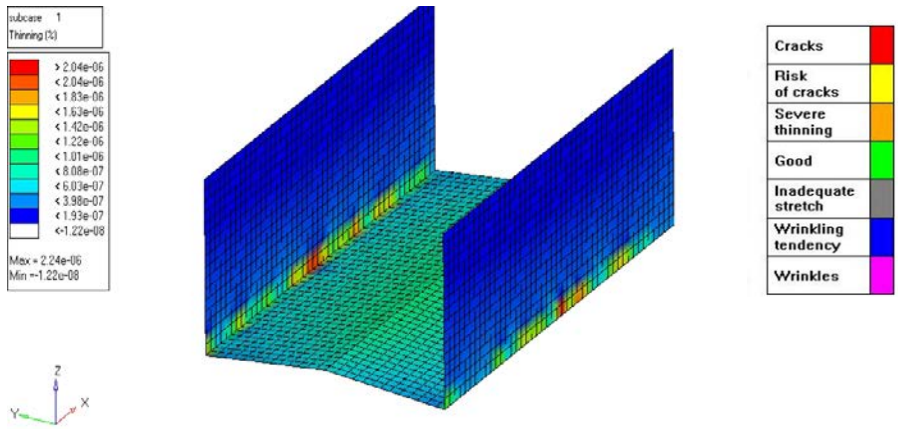

Figure 3.33: Thinning contour from incremental analysis

4.3.3 Formability result product of design C

The blank prediction shows in figure 3.34` below. To start formability result, the blank should be predicted first. The blank size based on the blank prediction is 90.84 x 111.29mm and use material thickness is 1mm.

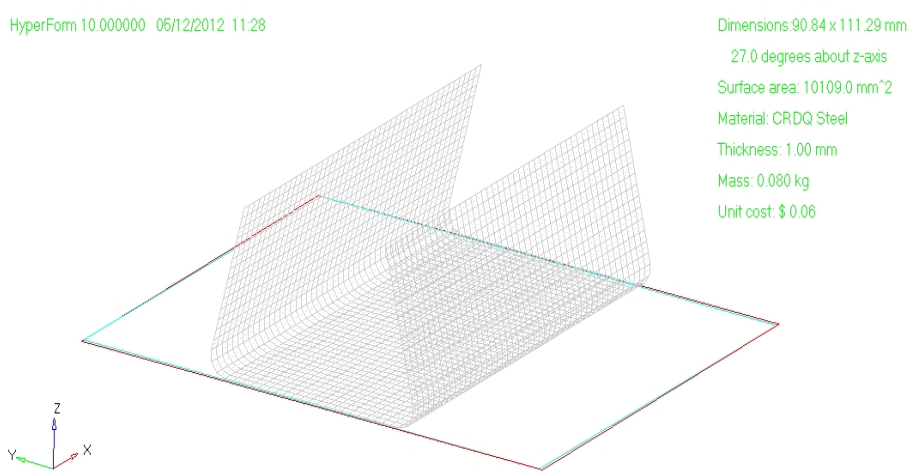

Figure 3.34: Blank prediction

Results of the simulation are interpreted in product design C on formability result. Advantages of sheet metal formability software are far more accurate predictions and to check the formability of the modified component and to develop the blank. Figure 3.35 below show the condition the product is in safety

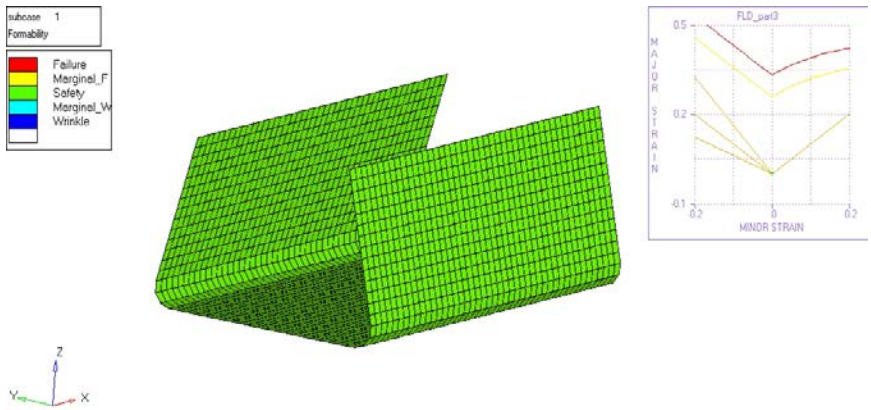

Figure 3.35: Formability contours from incremental analysis

The thinning process shows in figure 3.36 below. Side wall of blank look have wrinkling tendency.

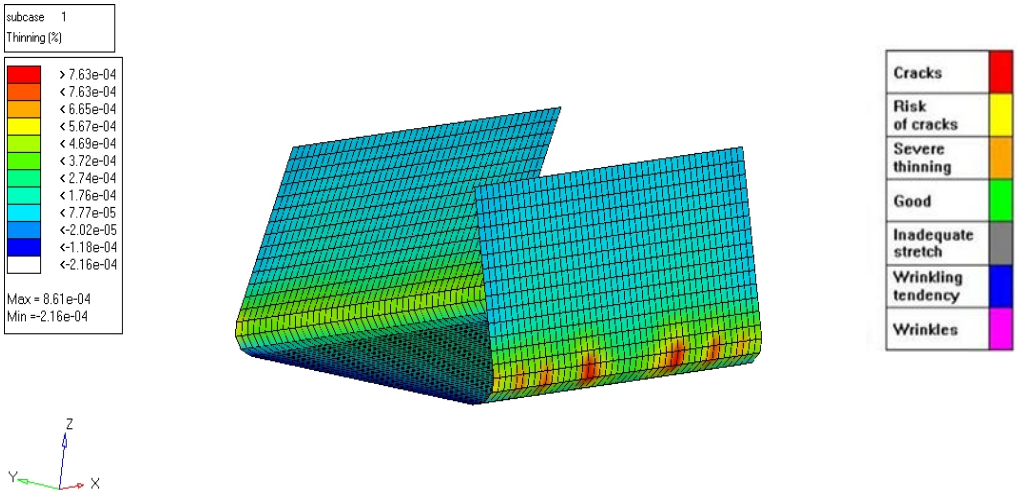

Figure 3.36: Thinning contour from incremental analysis

4.4 EXPERIMENTS RESULT

4.4.1 Experiments result for Design A

From the figure 3.37 below show the result of the springback for the sample product of design A. The experiments show the angle is 91.02°. So the springback for design A is 91.02°- 90 = 1.02°. According to the experimental and simulation results are in good agreements because value of springback is not too significant. According table 5 shows the comparison between simulation and experiment result design A.

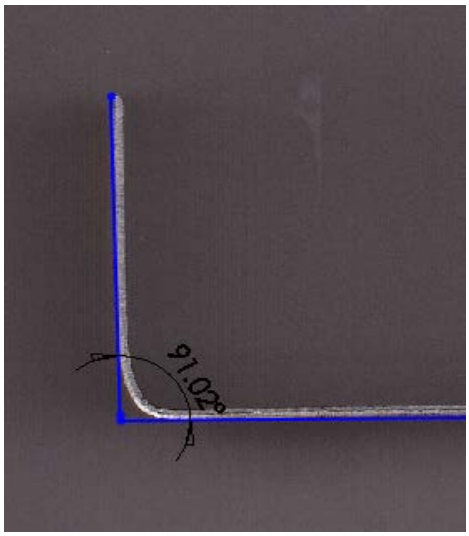

Figure 3.37: Springback result for design A

Compare	Simulation Result	Experiments Result
Design A	0.2°	1.02°

Table 5: Comparison between simulation and experiment result design A

4.4.2 Experiments result for Design B

From the figure 3.38 below show the result of the springback for the sample product of design A. The experiments show the angle is 92.04°. So the springback for design A is 92.04°- 90 = 2.04°. According to the experimental and simulation results are in good agreements because value of springback is not too significant. Springback value from simulation is not too large than experiment result. Table 6 shows the comparison between simulation and experiment result design B.

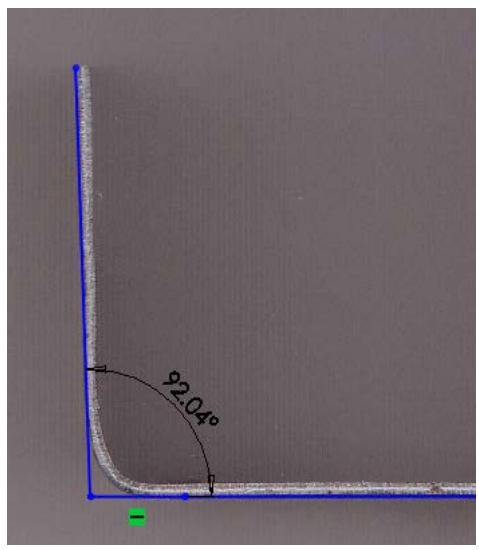

Figure 3.38: Springback result for design B

Compare	Simulation Result	Experiments Result
Design B	0.1°	2.04°

Table 6: Comparison between simulation and experiment result design B

4.4.3 Experiments result for Design C

From the figure 3.39 below show the result of the springback for the sample product of design C. The experiments show the angle is 84.45°. So the springback for design A is 90°- 84.45 = 5.55°. The experiment result is not tally with the simulation because design punch angle 15° is not suitable. The punch angle should not too large to avoid springback value not significant compared to simulation result. From table 7 shows the comparison between simulation and experiment result for design C.

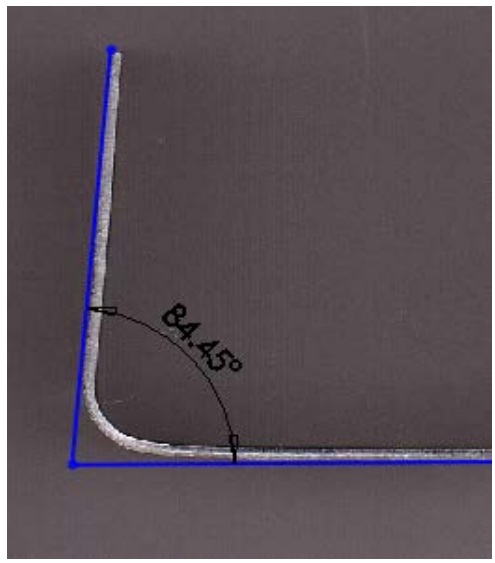

Figure 3.39: Springback result for design C

Compare	Simulation Result	Experiments Result
Design C	0.2°	5.55°

Table 7: Comparison between simulation and experiment result design C

CHAPTER 5

CONCLUSION AND RECOMMENDATIONS

5.1 INTRODUCTION

The following conclusion and recommendations are drawn based on the result and discussion done throughout this study.

5.2 CONCLUSION

Springback prediction and compensation are the major challenges in the modern die manufacturing industry. The deformation mechanics of springback phenomenon in U bending of sheet metal was investigated by using FEA. The analysis had been done by simulate of the sheet metal using the hyperform software. From the analysis done, the result obtained using hyperform software for design A is 0.2, design B is 0.1 and design C is 0.2 compare to the experiments result for design A is 1.02° , design B is 2.04° and design C is 5.55°. For the conclusion, this study has achieved the two objectives. In order to find a suitable punch or dies that can overcome the springback of the part in required U bending had been successfully conducted on experiment design. Where for the second objectives, the resulting springback using hyperform simulation and compare with resulting on experiment are also validated. The best design to overcome springback of the part in required U bending is design A because the springback value using simulation and experiment not too significant.

5.3 RECOMMENDATION

In order to improve the design suitable punch or die to overcome springback on U bending for future study. There some aspect should be taken into consideration.

1. Using variety of material in the experimental and simulation such as aluminum and mild steel and so on to investigate which material that have less springback
2. Study the measuring effect to product the springback by using different mesh in simulation and choose the result that has nearest value with the experiments.

REFERENCES

[1] Boljavonic V. (2004). "Sheet *Metal Forming Processes and Die Design"*, Industrial Press", pp, 64-67.

[2] Olaf Diegel. "*The Fine-art Of Sheet Metal Bending Complete Design Services*", pp 1-2, July 2002.

[3] Firat M. (2007), "*U-channel Forming Analysis With An Emphasis On Springback Deformation*", Journal of Material and Design, Elsevier. 28 (2007) 147-154.

[4] Adibi H, Ardakani M.H.A, Dariani D.M, " *Springback Analysis Of Sheet Metal Laminated After U-Bending*", Amirkabir University Of Technology, Tehran Iran, 2010.

[5] Stuart Keeler (1999), "*MetalForming Magazine*", PMA Services, Inc., Independence, OH

[6] McGraw-Hill, Ivana Suchy, "*Bending And Forming Operation*" Handbook Of Die Design, New York, pp 353-355,(2006).

[7] Haryanti S. (2007) " *Explicit and Implicit Time Integration in the Finite Element Modeling of Metal Forming Process*", Journal Ilmiah Mesin Universitas Trisakti Vol. 9, No. 4, September 2007

[8] Narasaiha, Lakshmi (2009), "*Finite Element Analysis"*.

[9] Huang, Y.M and Leu D.K (1996), "*Effect of Process Variable On V-Bending*", Journal Of Process Of Sheet 97(20): 632-650

[10] Barry HYMAN, "*Fundamentals of Engineering Design*", 2nd edition, Prentice Hall, 2003

[11] John P. Tanner "*Manufacturing Engineering*": An Introduction to the Basic Funictions.

[12] Michael F. Ashby, D R H Jones (2011) "Materials *Selection in Mechanical Design*", 4th edition.

[13] C. Gomes, O. Onipede, M. Lovell, B. Norman, J. Rajgopal, " *Analysis of Springback Using Simulation And Experimental Design*", Transactions of the North American Manufacturing Research Institution of SME, vol. XXIX, Gainesville.

APPENDICES

APPENDIX A1

GANTT CHART FOR FYP 1

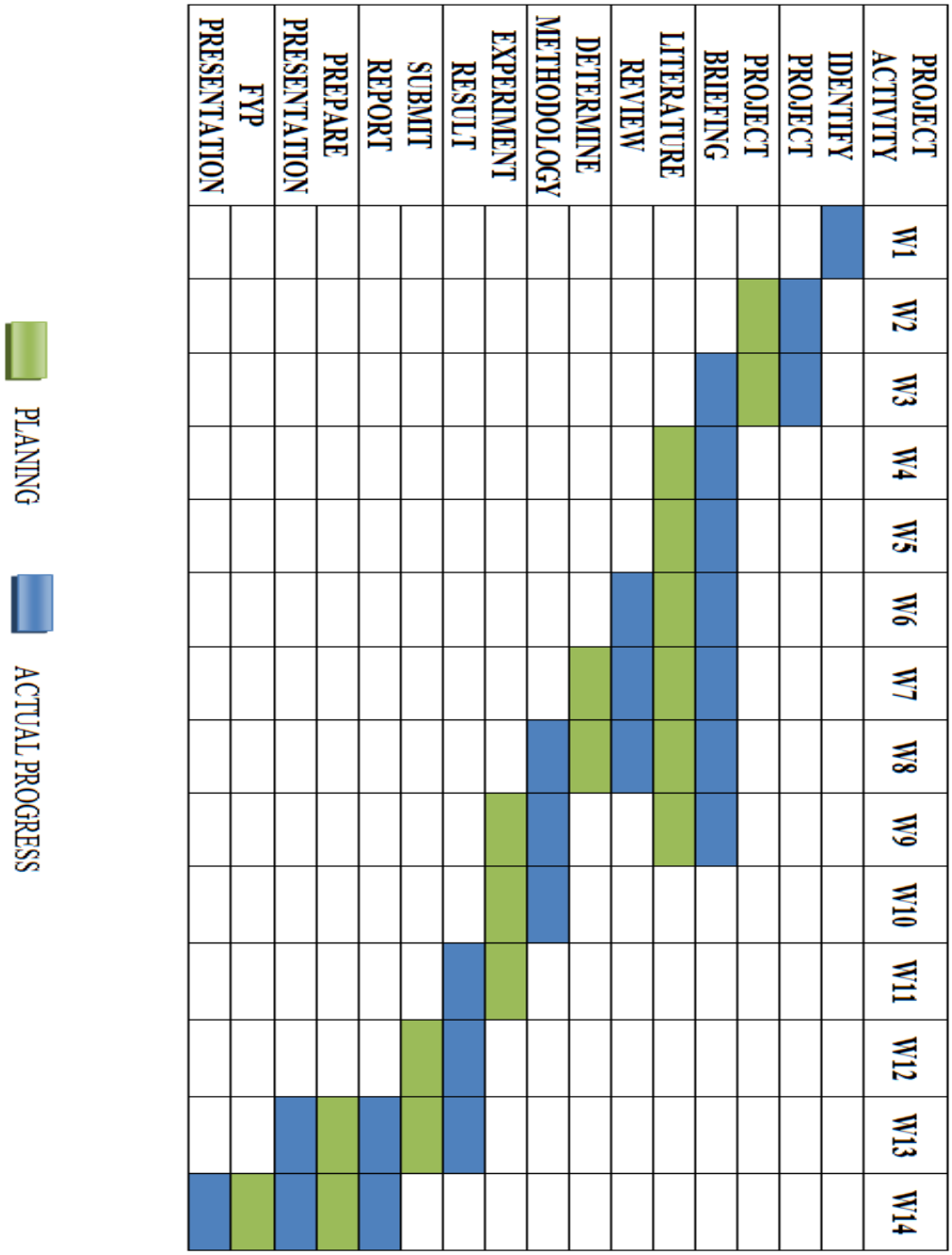

APPENDIX A2

GANTT CHART FOR FYP 2

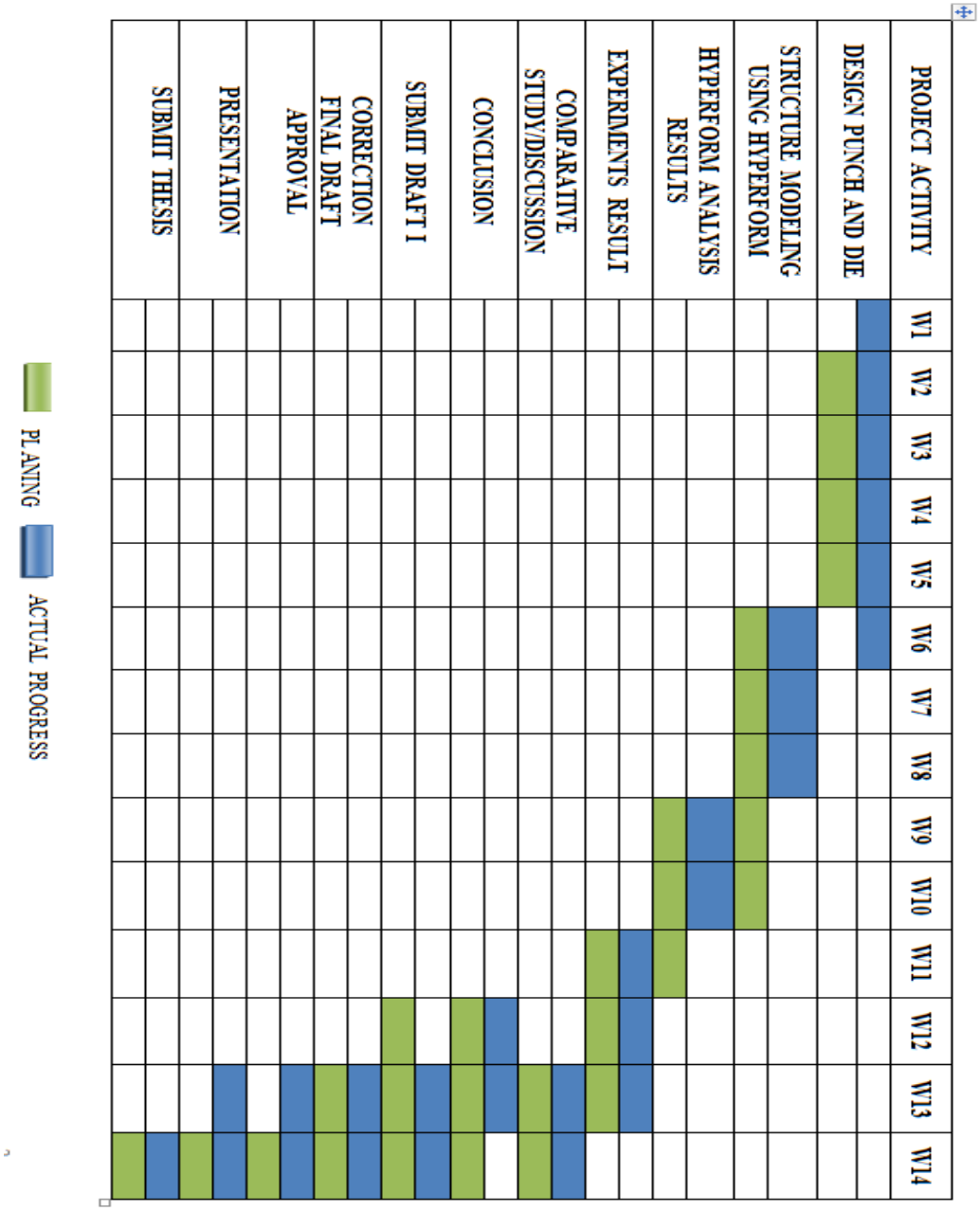

APPENDIX A3

DESIGN OF DIE A

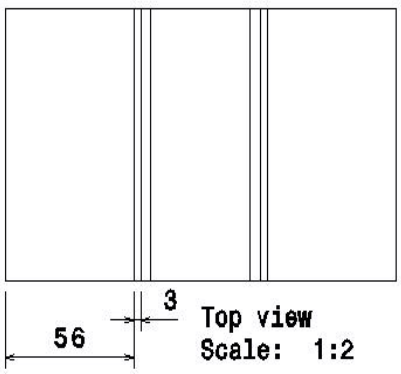

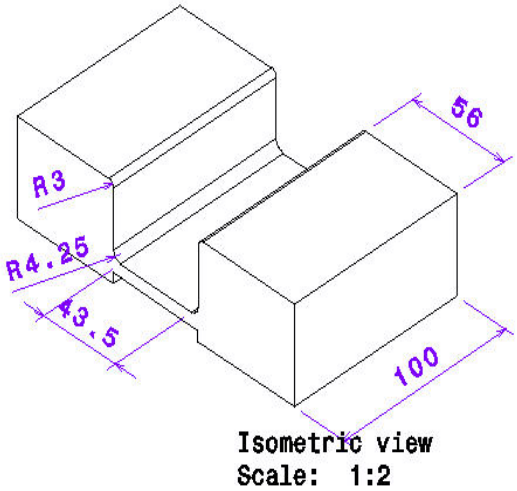

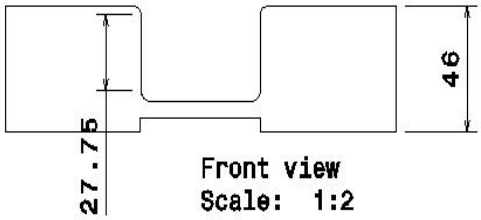

APPENDIX A4

DESIGN OF DIE B

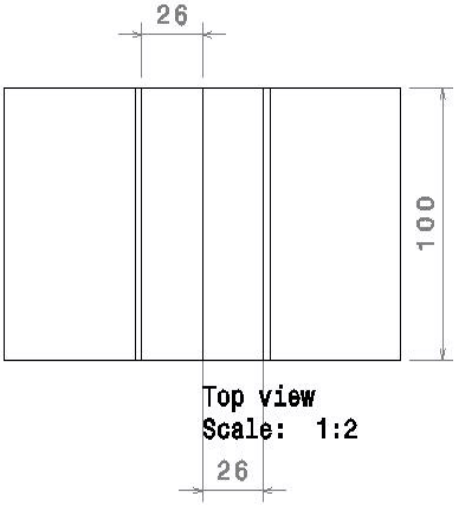

Top view
Scale: 1:2

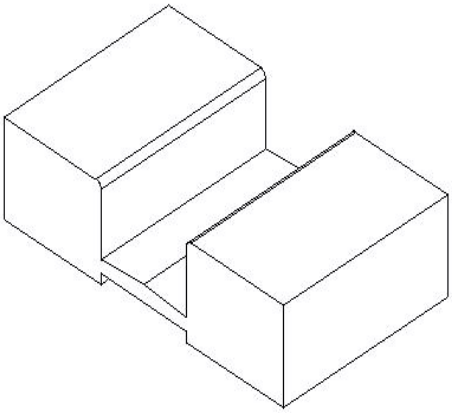

Isometric view
Scale: 1:2

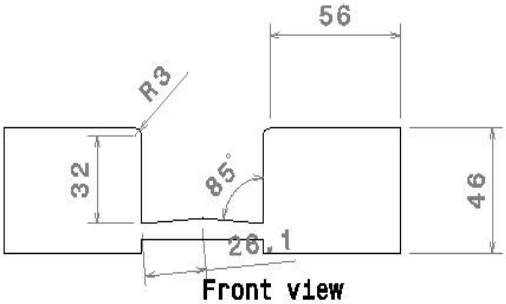

Front view
Scale: 1:2

APPENDIX A5

DESIGN OF DIE C

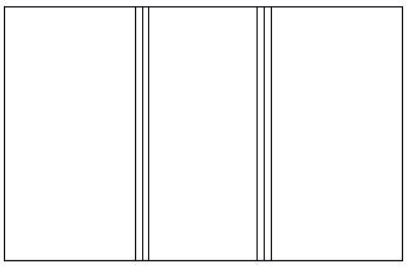

Top view
Scale: 1:2

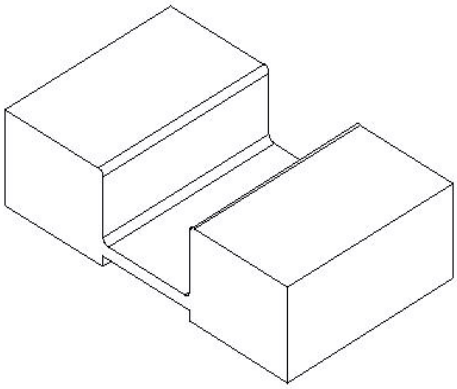

Isometric view
Scale: 1:2

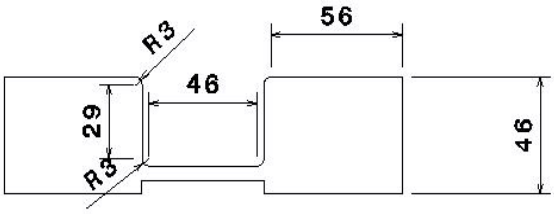

Front view
Scale: 1:2

APPENDIX A6

DESIGN OF PUNCH A

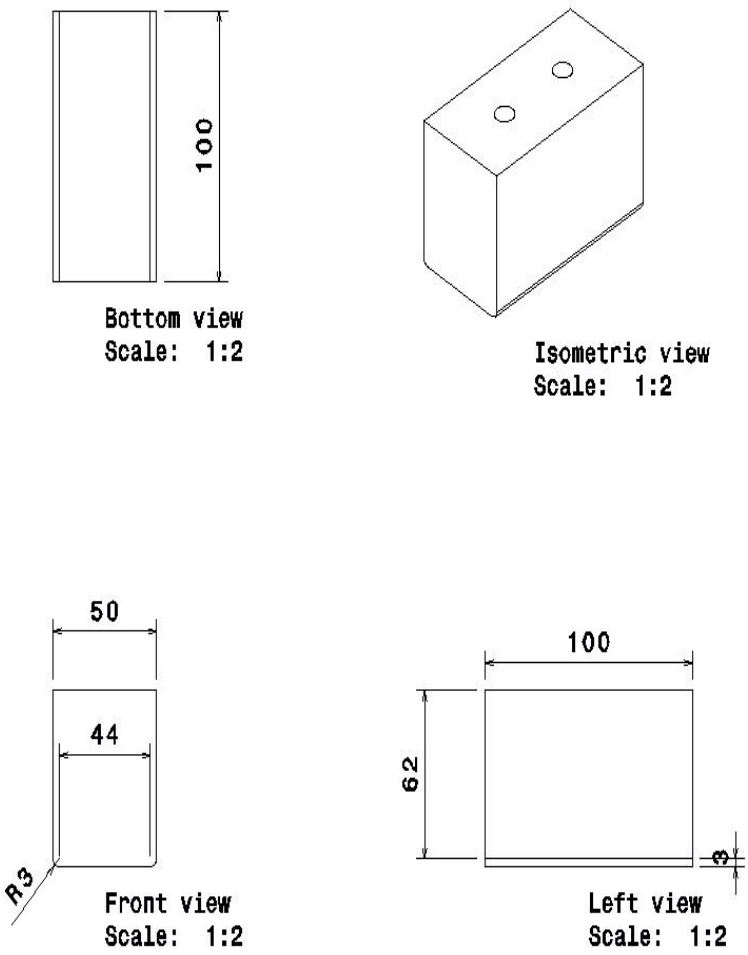

APPENDIX A7

DESIGN OF PUNCH B

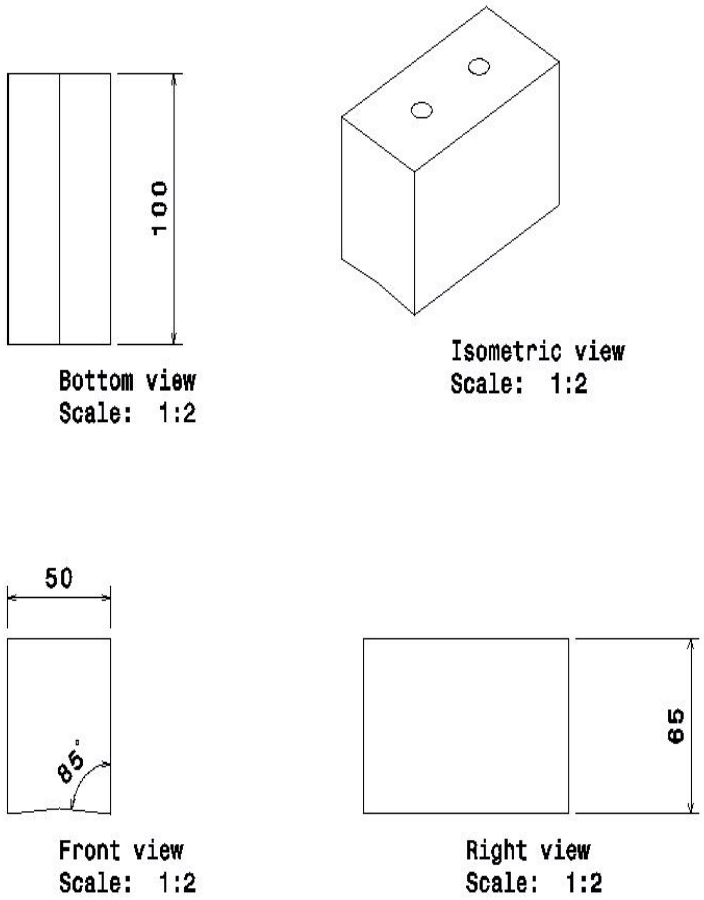

APPENDIX A8
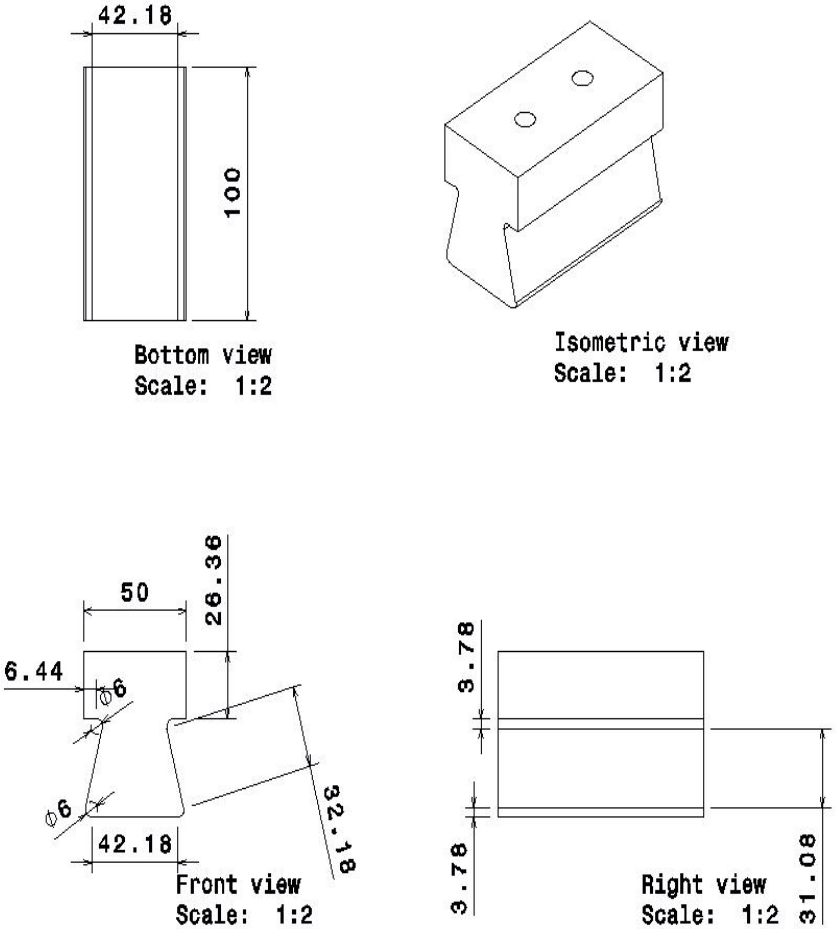
DESIGN OF PUNCH C