ROOM MONITORING SYSTEM USING RADIO FREQUENCY (RF) TECHNOLOGY AND PASSIVE INFRARED SENSOR (PIR)

ABROS NOORI BINTI ANVARDEEN

UNIVERSITI MALAYSIA PAHANG

UNIVERSITI MALAYSIA PAHANG

BORANG PENGESAHAN STATUS TESIS♦

JUDUL: **AUTOMATED GUIDED VEHICLE (AGV) MODEL**

SESI PENGAJIAN: **2008/2009**

Saya **ABROS NOORI BINTI ANVARDEEN (870519-08-5792)**
(HURUF BESAR)

mengaku membenarkan tesis (Sarjana Muda/~~Sarjana~~ /~~Doktor Falsafah~~)* ini disimpan di Perpustakaan dengan syarat-syarat kegunaan seperti berikut:

1. Tesis adalah hakmilik Universiti Malaysia Pahang (UMP).
2. Perpustakaan dibenarkan membuat salinan untuk tujuan pengajian sahaja.
3. Perpustakaan dibenarkan membuat salinan tesis ini sebagai bahan pertukaran antara institusi pengajian tinggi.
4. **Sila tandakan (√)

[ ]	**SULIT**	(Mengandungi maklumat yang berdarjah keselamatan atau kepentingan Malaysia seperti yang termaktub di dalam AKTA RAHSIA RASMI 1972)
[ ]	**TERHAD**	(Mengandungi maklumat TERHAD yang telah ditentukan oleh organisasi/badan di mana penyelidikan dijalankan)
[√]	**TIDAK TERHAD**	

Disahkan oleh:

(TANDATANGAN PENULIS) (TANDATANGAN PENYELIA)

Alamat Tetap:

NO.20 PRSN JELAPANG 19B
TAMAN SILIBIN MEWAH
30100 IPOH ,PERAK

MOHD ZAMRI BIN IBRAHIM
(Nama Penyelia)

Tarikh: **06 NOVEMBER 2008**

Tarikh: : **06 NOVEMBER 2008**

CATATAN:
- * Potong yang tidak berkenaan.
- ** Jika tesis ini SULIT atau TERHAD, sila lampirkan surat daripada pihak berkuasa/organisasi berkenaan dengan menyatakan sekali tempoh tesis ini perlu dikelaskan sebagai atau TERHAD.
- ♦ Tesis dimaksudkan sebagai tesis bagi Ijazah doktor Falsafah dan Sarjana secara Penyelidikan, atau disertasi bagi pengajian secara kerja kursus dan penyelidikan, atau Laporan Projek Sarjana Muda (PSM).

ROOM MONITORING SYSTEM USING RADIO FREQUENCY (RF) TECHNOLOGY AND PASSIVE INFRARED SENSOR (PIR)

ABROS NOORI BINTI ANVARDEEN

This thesis is submitted as partial fulfillment of the requirements for the award of the Bachelor Degree of Electrical Engineering (Electronics)

Faculty of Electrical & Electronics Engineering
Universiti Malaysia Pahang

NOVEMBER, 2008

"I hereby acknowledge that the scope and quality of this thesis is qualified for the award of the Bachelor Degree of Electrical Engineering (Electronics)"

Signature : _____

Name : MOHD ZAMRI BIN IBRAHIM

Date : 06 NOVEMBER 2008

Signature : _____

Author : ABROS NOORI BINTI ANVARDEEN

Date : 06 NOVEMBER 2008

Specially dedicated to my beloved family and friends.

ACKNOWLEDGEMENT

In order to complete this project, I met a number of people, namely lecturers and professionals. All of them have assisted me in many ways towards completing this project. I would like to express my sincere appreciation to my supervisor, Mr. Mohd Zamri Bin Ibrahim for his encouragement, trust, critics, constant attention and guidance towards finishing my project. I am also very thankful to Mr Saifudin Razali for his advices and motivation.

I also would like to thanks the personnel of Faculty of Electrical and Electronic Engineering (FKEE), especially lecturer, for their assistance and corporation. Not to forgotten Nik Mohd Kamil Bin Nik Yusoff , Nor Farizan Binti Zakaria and Mohammad Fadhil Bin Abas as my panels. My biggest thanks to the FKEE Electrical Laboratory staffs for all their directly or indirectly influential and supportive in finishing this project.

I am also obliged to express my appreciation towards my beloved family members of their moral supports, patience and financial supports due to complete this project. Special thanks to all my fellow undergraduate students are also entitled for an appreciation, especially Mohamed Faizan Bin Basheer Ahmad, Thamayanthi A/P Thangavelu, Nusaibah Binti Mohd Nor and Khor Jing Huey as they have been all very supportive and always assist me in various occasions. Thanks to all of you for everything.

ABSTRACT

Room monitoring system using Radio frequency (RF) technology and Passive Infrared Sensor (PIR) is a solution for the electricity wastage. In this project PIR used because this device is still new in market and not widely explored by users. This device act as an automatic switch, the light will automatically on when there is presence of intruders in monitored area. Monitoring system also combined to this project where, a signal will be send to monitoring room to indicate the presence of person in monitored area. The signals send to the monitoring room using Radio Frequency and turn on the indicator for monitored area. The designed circuit will be implemented and a simple application of wireless communication will be demonstrated using the PIC microcontroller to transfer streams of data and for control and data processing.

ABSTRAK

System pengawasan bilik menggunakan teknologi radio frekuensi dan Pengesan Infra-merah pasif (PIR) merupakan jalan penyelesaian bagi mengatasi pembaziran tenaga elektrik. PIR digunakan di dalam projek ini kerana ia merupakan alat yang baru dipasaran dan belum digunakan secara meluas oleh pengguna. Alat ini berfungsi sebagai swis automatik di dalam system ini. Apabila seseorang memasuki kawasan yang diawasi, kehadiranya akan dikesan oleh PIR dan lampu akan terbuka dengan sendiri. Projek ini juga digabungkan dengan system pengawasan, apabila seseorang memasuki kawasan yang diawasi, signal akan dihantar ke bilik pengawasan dan menyalakan LED bagi menunjukkan kehadiran orang itu di kawasan tersebut. Aplikasi komunikasi takberdawai(wireless) akan ditunjukkan dengan menggunakan PIC bagi menghantar, mengawal dan memproses maklumat.

TABLE OF CONTENTS

LIST OF TABLE

LIST OF FIGURE

LIST OF APPENDICES

LIST OF SYMBOLS

CPU	=	Controller Processing
LED	=	Light Emitting Diode
PIR	=	Passive Infra-Red
MHz	=	Megahertz
s	=	second
ms	=	millisecond
TE	=	Transmitter Enable
RAM	=	Random Access Memory
ROM	=	Read Only Memory
RF	=	Radio Frequency
PC	=	Personal Computer
I / O	=	Input / Output

CHAPTER 1

INTRODUCTION

Automatic switch means the switch will turn on and turn off it self and no need to be controlled manually by human. Most of the automatic switch will be controlled by electronic devices such as sensor. In this project PIR sensor act as switch, when the a person enter the monitored area the infrared energy emitted from the intruder's body will detected by the PIR and turn on the light and vice versa when the person live the monitored area. Automatic switch is needed to overcome electricity wastage due to negligence by users to turn off the electrical equipment. In addition automatic switch also save human energy and make our life easier.

Room monitoring system is a system where the monitored area controlled or watched from other room or place which is known as monitoring room. Room monitoring system is needed in huge places such as UMP that need constant monitoring to find out unused and used lecturer hall so that users will not have to manually check the entire area. In this project when the intruder enter room and the PIR were activated a signal will be send to monitoring room using radio frequency wave, and the LED in monitoring room will turn on to indicate the presence of intruder in monitored area. By having this system lecturer and student can save their time and energy.

1.1 Problem statements

In UMP, we are often faced with electricity wastage due to negligence by students who tend to forget to turn off the lights and air conditioner. In addition to this, lecturers often find it difficult to locate an unused lecture hall for extra classes.

1.2 Objective of this Study

The objective of this project is to;

i. Design an automatic switch system based on human detection.
ii. Develop a system that can reduce the waste of electricity, saves human energy and makes human life easier.
iii. Develop monitoring system using Radio Frequency (RF).

1.3 Scopes of research work

This project concentrates on automatic switch system based on human detection using Passive Infrared Sensor (PIR). The scope this project is to design automatic switch system that can reduce the waste of electricity in UMP. Radio Frequency (RF) system used to develop monitoring system which can be controlled or monitored remotely from Guard house.

To achieve all the project's objectives, the developer must have some knowledge of the following technology:

- High-level language and software development tool of C++.
- Computer architecture and hardware of PIC 16F84A
- Function of Transmitter (433MHz), Receiver and Passive Infrared Sensor (PIR).

- The concept and protocol of RF system.
- Application of monitoring system.

CHAPTER 2

LITERATURE REVIEW

2.1 Passive Infrared Sensor

A Passive Infrared sensor (PIR sensor) is an electronic device which measures infrared light radiating from objects in its field of view. In a PIR-based motion detector which is also called as Passive Infrared Detector (PID), the PIR sensor is typically mounted on a printed circuit board which also contains the necessary electronics required to interpret the signals from the pyroelectric sensor chip. The complete assembly is contained in a housing which is then mounted in a location where the sensor can view the area to be monitored. Infrared energy is able to reach the pyroelectric sensor through the window because the plastic used is transparent to infrared radiation. This plastic sheet prevents the intrusion of dust or insects which could obscure the sensor's field of view or, in the case of insects, generate false alarms.

A few mechanisms have been used to focus the distant infrared energy onto the sensor surface. The window may have multiple Fresnel lenses molded into it. If the amount of infrared energy focused on the pyroelectric sensor changes within a configured time period, the device will switch the state of the alarm relay. The alarm relay is typically a "normally closed (NC)" relay, also know as a "Form B" relay. A person entering the monitored area is detected when the infrared energy emitted from the intruder's body is focused by a Fresnel lens or a mirror segment and overlaps a section on the chip which had previously been looking at some much cooler part of the protected area. That portion of the chip is now much warmer than when the

intruder wasn't there. As the intruder moves, so does the hot spot on the surface of the chip. This moving hot spot causes the electronics connected to the chip to de-energize the relay, operating its contacts, thereby activating the detection input on the alarm control panel.

Figure 2.1 : Passive Infrared sensor.

Table 2.1 : Technical specification of PIR sensor.

Description	**476 +**
Sensor type	Dual rectangular element, low noise, high sensitivity
Coverage 110°(standard)	10.6 meter x 10.6 meter (35ft. x 35ft.)
Installation height	2.1 meter to 2.7 meter (7ft. to 9 ft.)
Detection speed	0.2 to 7m/second (0.6 to 23ft./second)
Operating temperature	-10°C to +50°C (14°F to +122°F)
Power Input	12 Vdc, 31mA maximum
Zones	22 = 9 + 5 + 3 (standard)
Lens	2nd generation Fresnel lens, LODIFF®, segments
Alarm output	N.C. 28V DC 0.15A
Anti temper switch	N.C. 28V DC 0.15A maximum
Processing	Auto Pulse, two levels, temperature compensation
Startup	35 seconds
Mounting Height	7 - 9 ft (2m – 2.7m)
Alarm Indication	Green LED, constant light for 3 seconds
Humidity	95 % maximum

2.1.1 Motion Detector Activated Light

Many applications using Passive Infrared Sensor (PIR) and RF system are developed. In this topic I summarize several important related research projects and these projects inspired me to design room monitoring system using RF technology and PIR sensor.

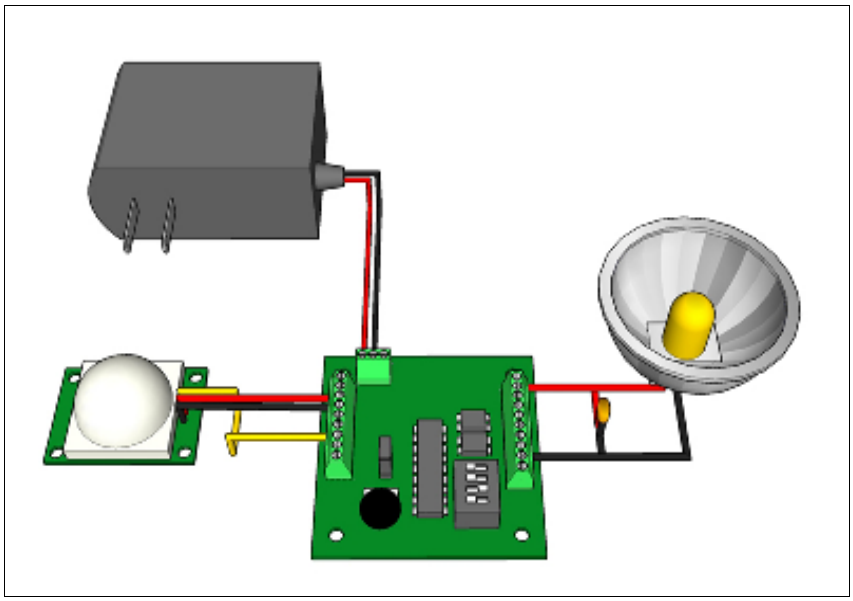

Figure 2.2: Motion Detector Activated Light

First we look at Motion Detector Activated Light [4]. In this project PIR sensor is connected to a PolyBlock which, in Timer Mode, can turn a light on automatically for a specified period of time when somebody is within range. Timer used in this project because the PIR signal is only on for a few seconds after it detects movement, so we have to add timer if we want the light to be on for much longer.

2.1.2 PIR Camera

Figure 2.3 PIR Camera

Secondly we look at PIR camera which uses the application of PIC12C509 and PIR sensor [5]. In this project when the sensor detects movement in a room it will take a burst of 10 photos with the digital camera. Each photo is taken at 0.5sec interval. After the 10 photos, the camera waits 3 seconds for further movement and if it is detected, the process is repeated until 80 photos are taken and the photos can be downloaded to the PC.

2.2 Radio Frequency

Radio frequency (RF) is a frequency or rate of oscillation within the range of about 3 Hz to 300 GHz. This range corresponds to frequency of alternating current electrical signals used to produce and detect radio waves. Since most of this range is beyond the vibration rate that most mechanical systems can respond to, RF usually refers to oscillations in electrical circuits or electromagnetic radiation.

Electrical currents that oscillate at RF have special properties not shared by direct current signals. One such property is the ease with which it can ionize air to create a conductive path through air. This property is exploited by 'high frequency'

units used in electric arc welding. Another special property is an electromagnetic force that drives the RF current to the surface of conductors, known as the skin effect. Another property is the ability to appear to flow through paths that contain insulating material, like the dielectric insulator of a capacitor. The degree of effect of these properties depends on the frequency of the signals.

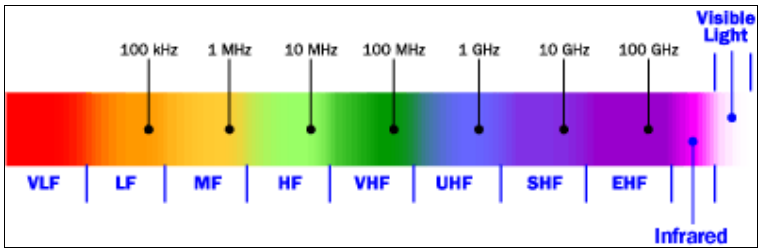

Fig 2.4 Radio Frequency Spectrum

Each of the bands illustrated in the above figure have their own frequency range. Table below shows this range and their uses in several fields of wireless communication. [3]

Table 2.2 : Band Frequency Range [4]

Band name	Abbreviation	Frequency	Example of field use
Very low frequency	VLF	3-30 kHz	Military communication
Low frequency	LF	30-300 kHz	Navigation, time signals
Middle frequency	MF	300-3000 kHz	AM broadcasts
High frequency	HF	3-30 MHz	Shortwave broadcasts
Very high frequency	VHF	30-300 MHz	FM and TV broadcasts
Ultra high frequency	UHF	300-3000 MHz	TV, wireless LAN
Super high frequency	SHF	3-30 GHz	Wireless mobile
Extremely high frequency	EHF	30-300 GHz	-

This project used a transmitter that worked at 433.92 MHz, hence falling into the Ultra High Frequency (UHF) Band.

2.2.1 How RF Communications works

The simplest way in which a person can produce a RF signal would be to short a battery with a wire by continuously scratching the wire on the battery terminal. The disturbance signal created would be heard on a radio which is tuned close to the frequency of the disturbance signal. However it is of no use to create such signals since they do not contain any useful information or data. Hence in real world situations, the data to be sent is encoded within the transmitted signal so that a well designed receiver can separate the data from the signal upon reception of this signal. The decoded data can then be used to perform specified tasks. There are several methods of incorporating data into a signal that is to be transmitted. This process is known as modulation. In real world application, there are several modulation techniques, the Amplitude modulation (AM), Frequency Modulation (FM) and slight variation of AM and FM modulation such as Amplitude Shift Keying (ASK), Frequency Shift Keying (FSK) and Phase Shift Keying (PSK). It has to be highlighted that ASK, FSK and PSK are used in digital modulation. Since this project was on transmission of digital data, the transmitter chosen used the ASK modulation as a means of sending the data signal.[7]

2.2.1.1 Amplitude Modulation (AM)

Amplitude Modulation used to be really common in the early stages of wireless broadcasts but is slowly vanishing now. AM is basically changing the amplitude of the Transmitted wave in a way as to resemble the data that is being sent. As shown in Fig 2.5, the modulating signal, which is controlled by the data to be sent, changes the amplitude of the carrier, creating a series of different amplitudes. The wave now represents usable data that can be decoded back into the modulating signal by a receiver. AM however had a disadvantage of picking up human made noise signals which are AM in nature, hence making it less popular.

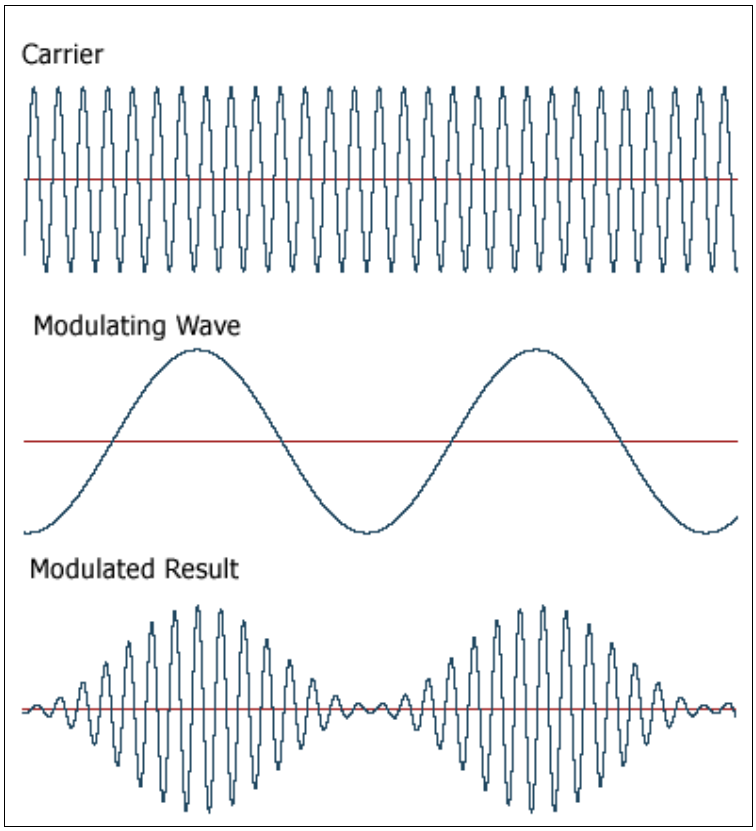

Fig 2.5 Amplitude modulation

2.2.1.2 Frequency Modulation (FM)

Frequency Modulation is the most common source of broadcast radio services nowadays. FM, which solved the AM problem, works by modulating the transmitted signal by actually varying the carrier according to the modulating signal. This is shown in fig. below. Hence positive amplitude at the modulating signal increases the frequency of the outgoing signal and negative amplitude at the modulating signal decreases the frequency of the outgoing signal. At the receiver, the change in frequency of the incoming signal is placed into a discriminator circuit which gives back the original modulating signal.

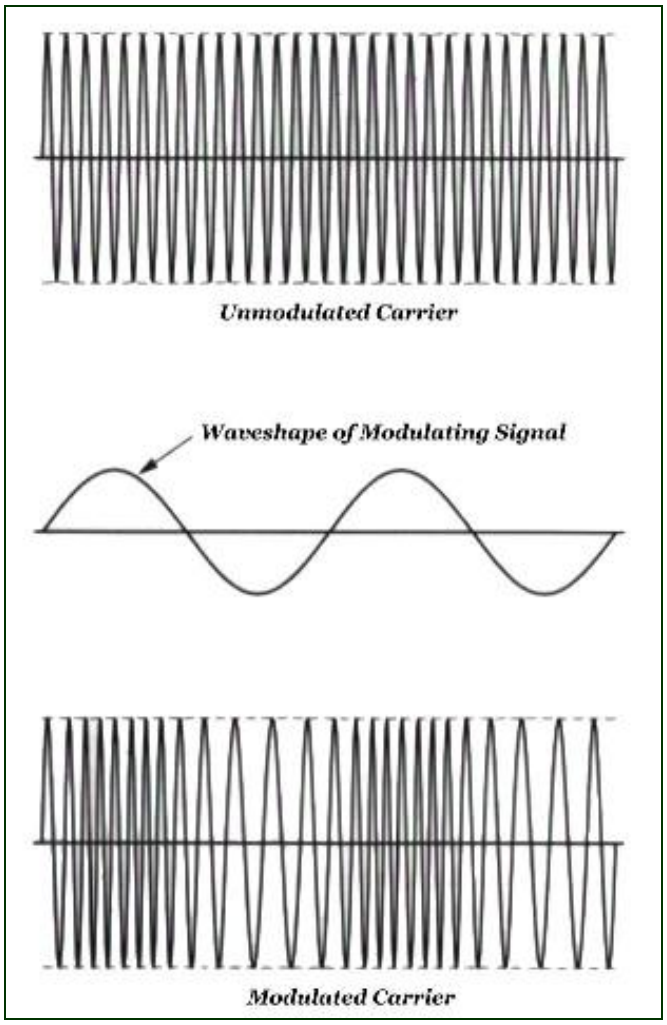

Fig 2.6 Frequency Modulation

2.2.1.3 Amplitude shift Keying (ASK)

ASK is a digital modulation technique whereby the carrier signal is multiplied by the digital form of data that is to be transmitted. As shown in Fig 2.7, the unmodulated carrier is multiplied to the digital signal 101001011 which in turn produces the outgoing ASK modulated signal. The transmitter of this project uses the ASK modulation. This is obvious since the project requires transfer of digital data.

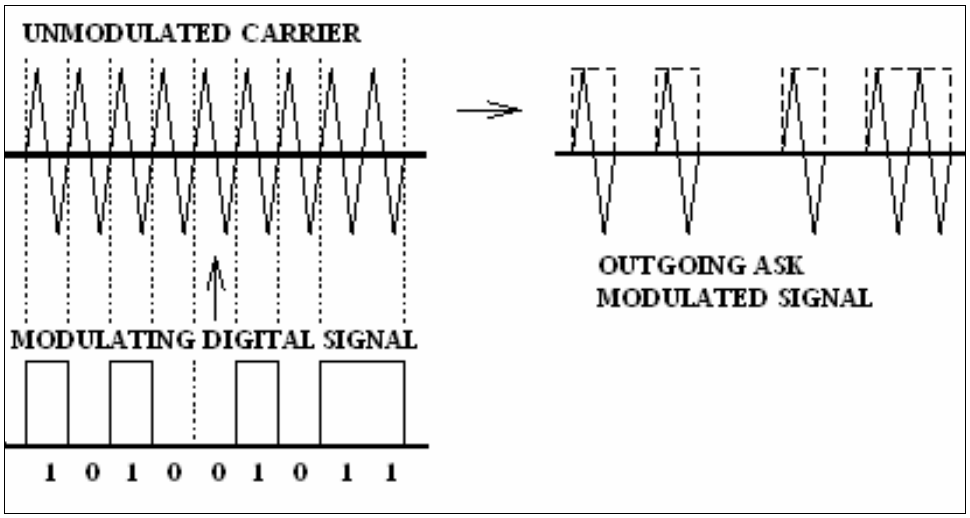

Fig 2.7 Amplitude Shift Keying

2.2.1.4 Frequency Shift Keying (FSK)

FSK is also a digital modulation technique whereby a carrier (or two carriers) is modulated by using separate frequencies for the 1's and 0's of the digital data signal. Fig 2.8 below shows the two carrier waves and the digital data modulating signal. Wherever the 1's of the data signal occurs, the top carrier wave is transmitted and wherever the 0's of the data signal occurs, the bottom carrier wave is transmitted. The outgoing FSK modulated signal then takes the form as shown.

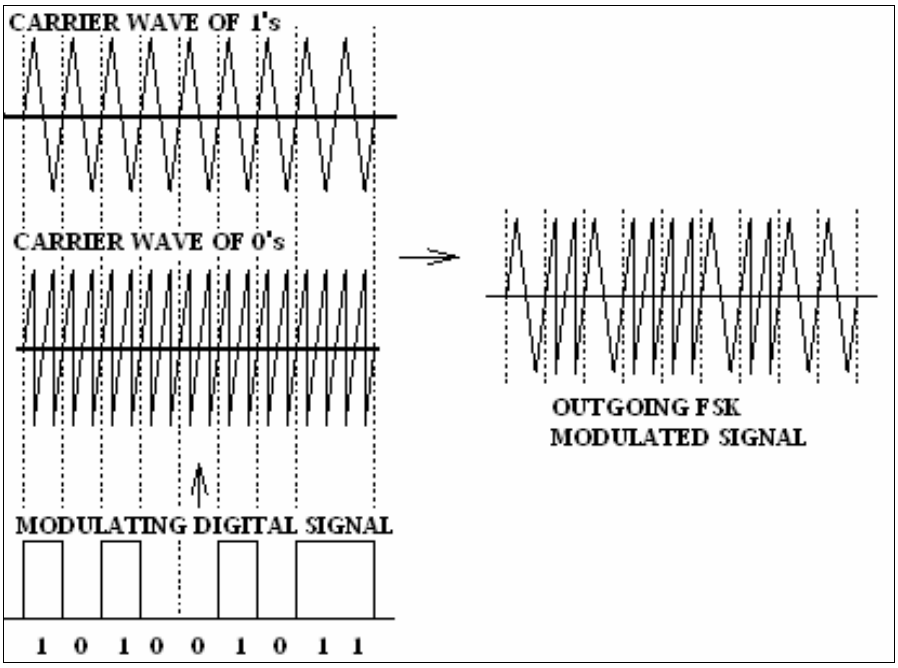

Fig 2.8 Frequency Shift Keying

2.2.1.5 Phase Shift Keying (PSK)

PSK alters the phase of the carrier signal. A Binary PSK (BPSK) has a phase of either 0 or J. A Quadrature PSK (QPSK) has phases of 0, J/2, J, 3J/2. Whichever PSK is used, the digital signal decides where the phase alters. The 1's do not change the phase but the 0's do. Fig 2.9 shows a BPSK modulated signal.

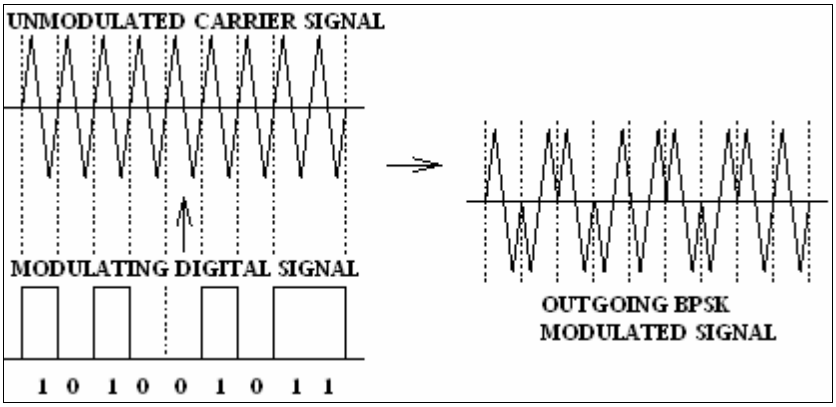

Fig 2.9 Phase Shift Keying

2.2.2 Stages Required for RF Communication

At first glance, the concept of RF Communication can seem to be complicated. However, a stepwise approach to this system proves to be simpler in nature as well as more understandable to a laymen or a non-electrical student. The basic four steps for RF communication are listed below.

i. Encode the n bits of data to be sent into serial format. Since all data is to be transmitted using a single antenna, the need for such a conversion is justified since all the n bits will be transmitted using this single antenna. The conversion can be done using the available encoder IC's such as Motorola's MC145026 and Holtek's HT12E encoder IC's. Each IC has a limit to the number of bits of data that it can encode at a time. The above named IC's are capable of sending 4 bits of data and 8 bits of address at once.

ii. Send the encoded data to a transmitter. The job of a transmitter is to use any of the types of modulation discussed in chapter 2 and transmit together with the electromagnetic waves the data that was given to it by the encoder. The transmission is done via an antenna of a specific length depending on the frequency and band at which the transmitter transmits at.

iii. Receive the incoming RF signal using a receiver tuned at the same frequency as the transmitter. The receiver also descrambles the signal in order to obtain the serial form of data that was transmitted.

iv. Decode the serial form of data from receiver back into its original number of bits. This conversion is done by decoder IC's available by Motorola and Holtek's HT12D decoder IC's. Encoder and decoders come in pairs and each pair has to be used for proper operation. This project uses the Holtek's encoder/decoder pair for RF communication.

2.2.3 Remote Monitoring System

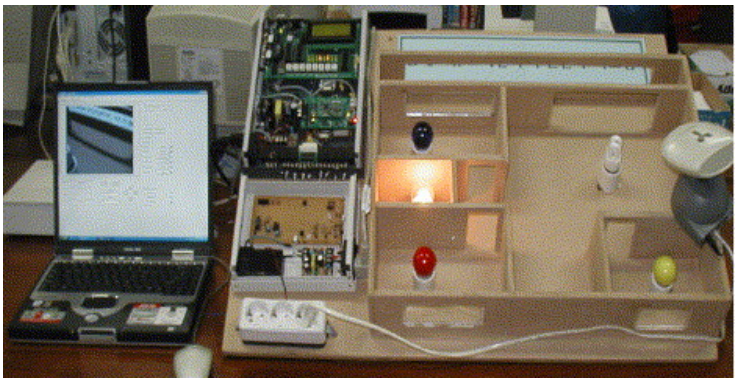

Figure 2.10 Remote monitoring systems with wireless sensors module for room environment

Thirdly we look at Remote monitoring system with wireless sensors module for room environment [6]. In this project, RF wireless sensor module with optimal communication condition was developed. An indoor air quality in a room or office could be monitored by web-based monitoring system together with other home networking system. Several offices and rooms can be monitored from terminal PC or Personal Digital Assistant (PDA) by using wireless sensor modules which are attached on the wall of the office or the room. The monitoring results in serve computer were saved and can be monitored following after.

By go through this three and few similar projects, I come out with an idea to design a project which have same application but using different device. So I decide to design room monitoring system using RF technology and PIR sensor. I choose to add monitoring system, because I want this design to have multi function, not only automatic switch based on human detection.

CHAPTER 3

METHODOLOGY

The overall Room monitoring system using RF technology and PIR sensor design consists of hardware design and software development. The most important hardware design is a microcontroller board that used to control the whole system and the transmitter and receiver module that used to send and collect the data.

The whole of progress is beginning with the literature review and research of the project. In this part, overall research had been done by doing researching from internet questionnaire about this project. Then after data collected, and all information needed is enough, the next part is to design the hardware circuit. In this design, I used PIC16F84A and PIR sensor.

Firstly, development board design and the second is application part design. After design is done, then I built it in real part. After finish built it, to make sure the hardware is run, I try it by using the simple programming. When it run in the suppose way, then the hardware is success. While the hardware is run well with application part, next step is to construct the programming for the project. After programming part is finish, then I build the Room monitoring model. The last stage is combining the circuit and model.

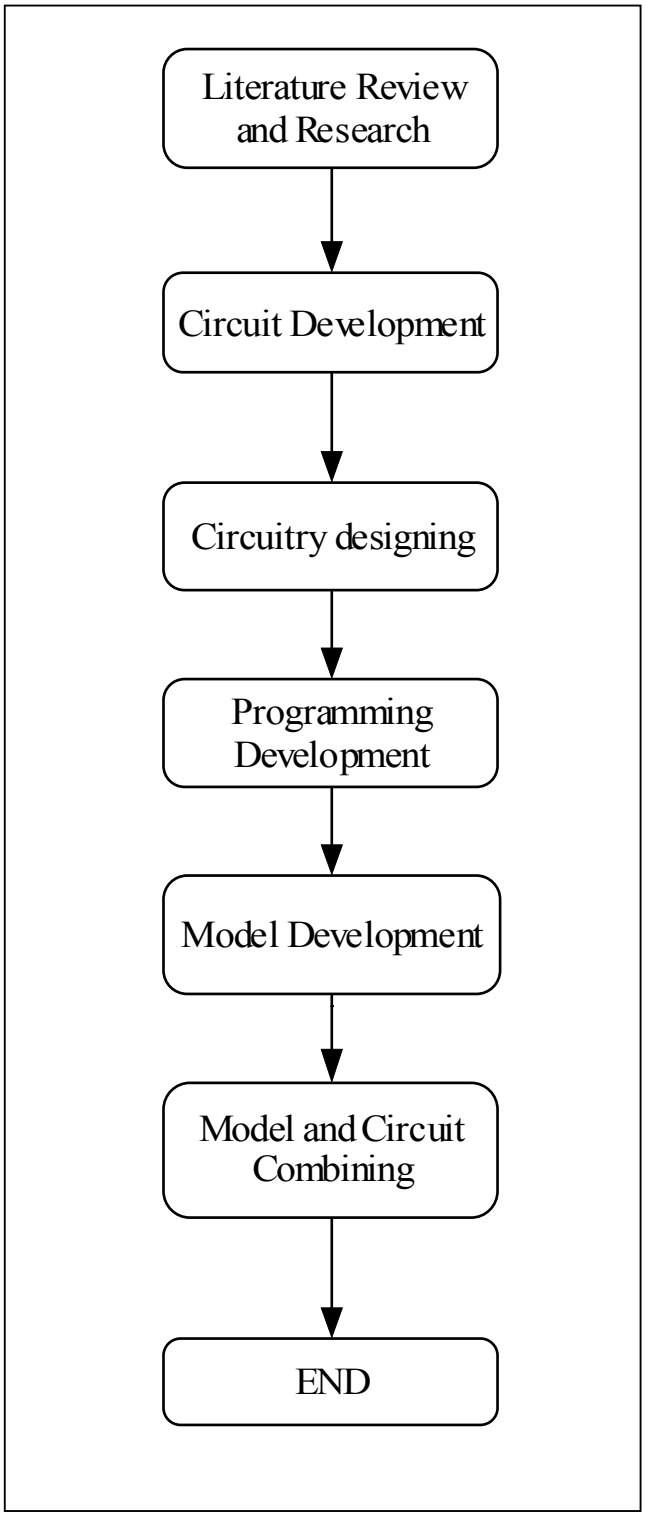

Figure 3.1: Flow of progress

3.1 Hardware Design

The Room monitoring system is divided into four major modules:

- PIR sensor
- Microcontroller module
- Transmitter module
- Receiver module

As discussed briefly in section 2.2.2, the four steps for RF communication calls for four components, each to be able to perform the tasks stated in each of the four steps. In this project, the HT12E 2^{12} series encoder, 433MHz RF transmitter Module, 433MHz RF receiver Module and HT12D 2^{12} series decoder were used for each of the four steps respectively.

3.1.1 Passive Infrared Sensor (PIR)

A PIR sensor is an electronic device that measures infrared (IR) light radiating from objects in its field of view. PIR sensors are often used in the construction of PIR based motion detectors. A PIR detector is a motion detector that senses the heat emitted by a living body. These are often fitted to security lights so that they will switch on automatically if approached. They are very effective in enhancing home security systems.

In this system, PIR sensor acts as automatic switch. The PIR sensor will be placed at the monitored area; the person entering monitored area is detected when the infrared energy emitted from the intruder's body is focused by a Fresnel lens or a mirror segment and overlaps a section on the chip which had previously been looking at some much cooler part of the protected area. That portion of the chip is now much warmer than when the intruder wasn't there. As the intruder moves, so does the hot spot on the surface of the chip. This moving hot spot causes the electronics connected to the chip to de-energize the relay, operating its contacts, thereby

activating the detection input on the Programmable Intelligent Computer (PIC16F84). The PIC will send electrical signal to turn ON the light in monitored area when there is presence of a human.

When the person leave the monitored area the portion of the chip in the PIR becomes cooler than when the intruder was there. It causes the electronics connected to the chip to energize the relay, thereby deactivating the detection input on the PIC, so that the light in monitored area will turn OFF.

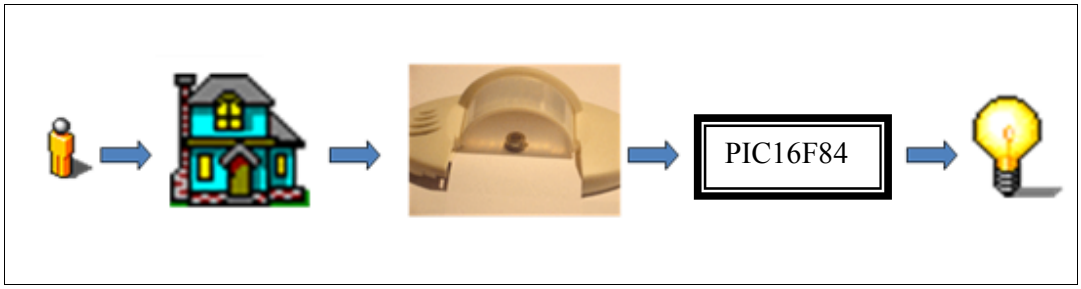

Figure 3.2 PIR sensor modules

3.1.1.1 SELCO SIR – 651 PIR Sensor

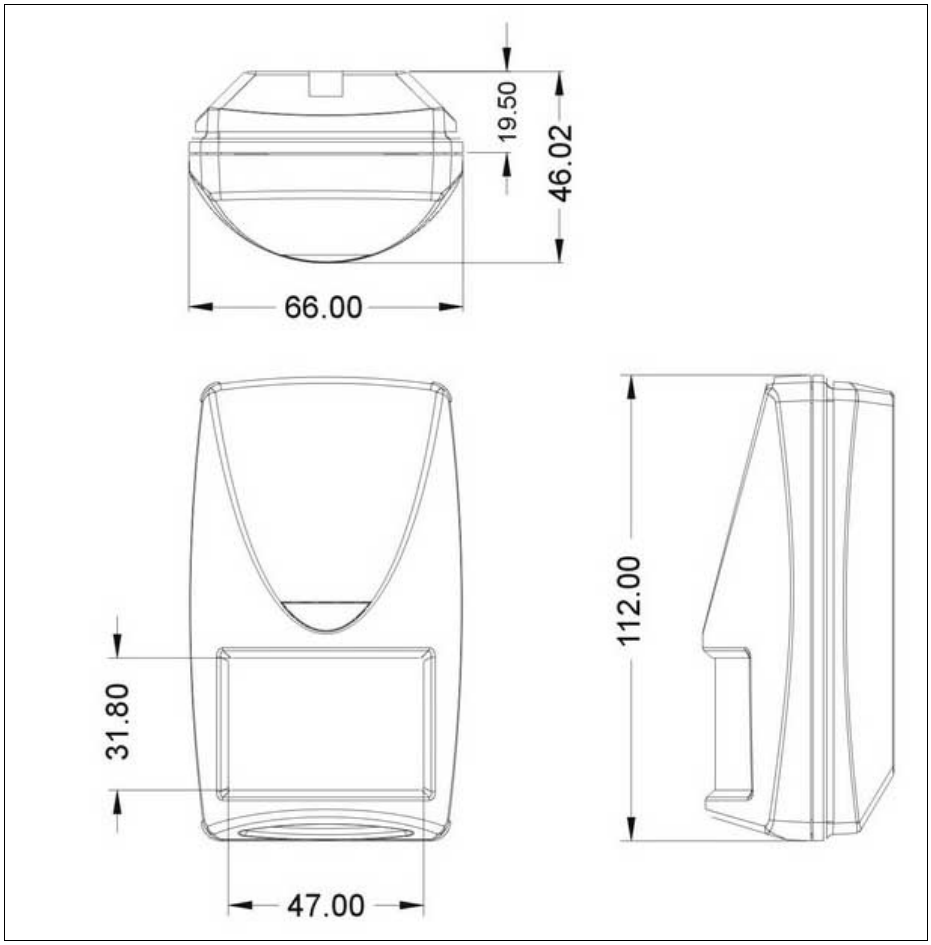

Figure 3.3 SIR-651 PIR Sensors

The SIR-651 PIR sensor manufactured by SELCO, defines a plurality of protective zones, each of which is defined by its own parabolic reflecting surface. The PIR detector is a pyroelectric device that detects motion by measuring changes in the infrared levels emitted by surrounding objects. This motion can be detected by checking for a high signal on a single I/O pin. The electrical characteristic of this device showed in Table 3.6.

Table 3.1: Characteristics of SIR-651 PIR Sensor

Parameter	Conditions
Power supply	9 ~ 16 VDC 12V typical
Current drain	N.C: 15mA, N.O : 5mA, 12VDC
Alarm Output	N.C / N.O 30 VDC, 0.2A max
Alarm period	1.5 ~ 2.5 sec
Pulse count	2/3 selectable
Tamper switch	N.C cover open activates
Walk test LED	Red. can be disabled
RFI immunity	Ave. 20V/m (10 ~ 1000 MHz)
Detectable speed	0.3 ~ 1.5m/sec
Mounting height	2.2 ~ 3.6 m
Humidity	95% RH maximum
Temperature	-20ºC ~ 60ºC (-4ºF ~ 140ºF)
Dimensions	112× 66 × 46 mm
Unit weight	87 grams

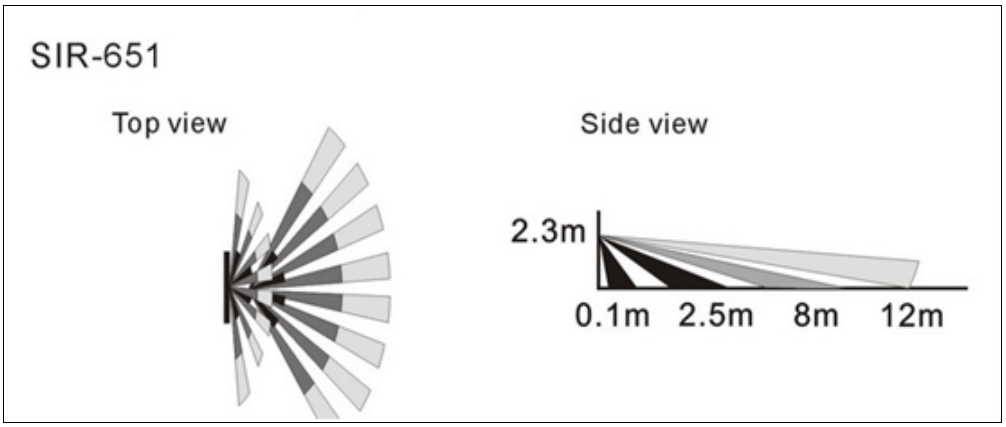

Fig 3.4 Dimension of SIR-651 PIR Sensor

3.1.2 Microcontroller Module

The PIC, like the CPU, has calculation functions and memory, and is controlled by the software. However, the throughput and the memory capacity are low.

Depending on the kind of PIC, the maximum clock operating frequency is about 20 MHz and the memory capacity (to write the program) is about 1K to 4K words. The clock frequency determines the speed at which a program is read and an instruction is executed. The throughput cannot be judged with the clock frequency alone. It changes with the processor architecture. However within the same architecture, the one with the highest clock frequency has the highest throughput. I use a 14-bit WORD for program memory capacity. An instruction is a word long. Program memory is measured in BYTES, one byte is 8 bits. The bit is the smallest unit, and can have the value of 1 or 0. The instruction word of the PIC16F84A is composed of 14 bits. 1K words is equal to 1 x 1,024 x 14 = 14,336 bits. To convert this to bytes divide it by 8 x 1024, (14,336 / 8 x 1024 = 1.75K bytes).

It has to be realized that just the PIR sensor and transceiver boards are not enough for automatic switch and controlled wireless communication system, especially in real life projects. The placing and reading of data and enabling/disabling of encoders would prove to be too tedious. Hence the use of microcontrollers to do the control is justified. This project used PlC 16F84A to control data flow on each of the two transceivers.

3.1.2.1 PIC 16F84A Microcontroller

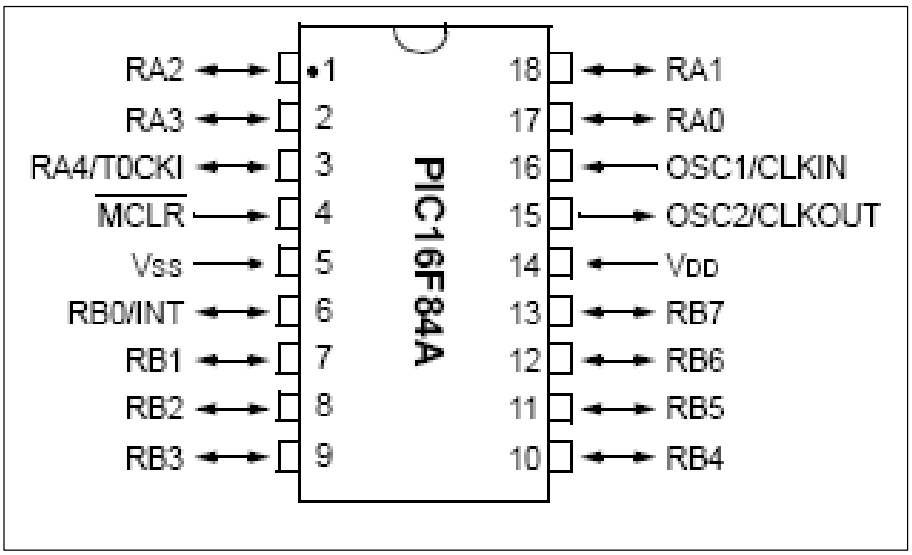

Figure 3.5 Pin PIC 16F84A

The PIC 16F84A microcontroller is manufactured by Microchip®. The PIC16F84A belongs to the mid-range family of the PICmicro® microcontroller devices. It proved to be easier in terms of programming and control. Also, the Flash Memory of this controller means that data can easily be erased electronically form the chip and reprogrammed with new and better codes when required. There are 13 I/O pins, with individual direction controls. The mode (input or output) of each pin can be set from within the program. The 13 pins are divided into two groups. The A Port has five pins and the B Port has eight. There is a limitation on control timing, but each of the 13 pins can be individually controlled. Some pins are multiplexed with other device functions. These functions include External interrupt, change on PORTB interrupts and timer0 clock input.

Flash memory is used to store the program. One word is 14 bits long and 1024 words (1k words) can be stored. Even if power is switched off the contents of the flash memory will not be lost. Flash memory can be written to using the writer, but the number of times it be rewritten is limited to 1000 times.

Due to the PlC 16F84A being highly sensitive to static charge, using standard programmers such as PlC Start Plus would not be desirable. This is because it would require constant handling of the microcontroller, making it more vulnerable to static damage. Using this microcontroller for control of the transceiver would require use of CCS Compiler, using which programming will be done in high level language to enable sending of the complied .hex file to the microcontroller.

In this project, I decided to use both ports, port A and port B. The chosen ports had used as input and output. Before I continue with my further circuit design for this project, I have to complete the basic circuit for the PIC16F84A first. The basic circuits were power supply circuit, clock circuit and reset circuit. For power supply circuit a 3 terminal regulator is used to get +5V output from +12V power in. Because it is suppressing the current of the LED, a 100 mA-type regulator is enough. For clock circuit 20MHz resonator was used.

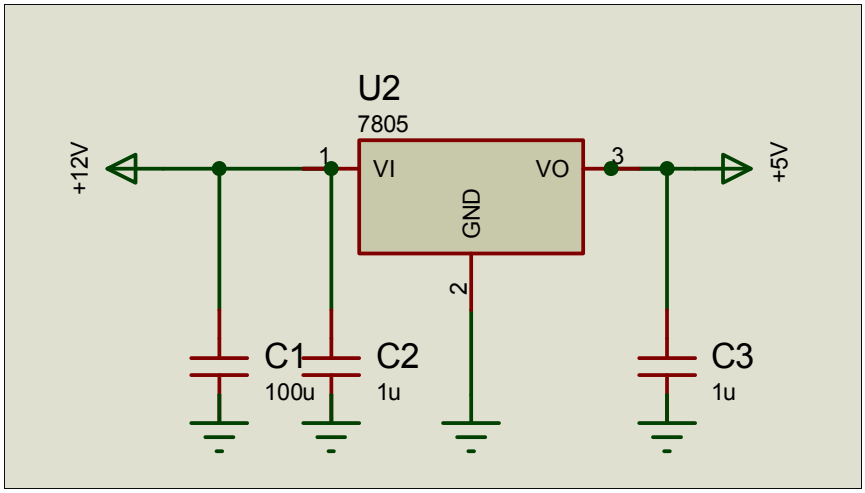

Figure 3.6 Power supply circuit

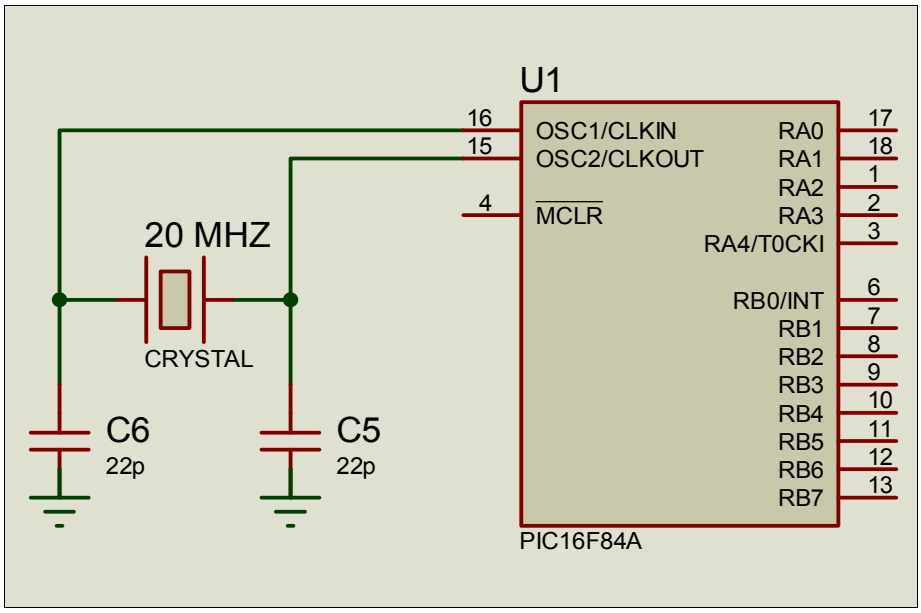

Figure 3.7 Clock circuit

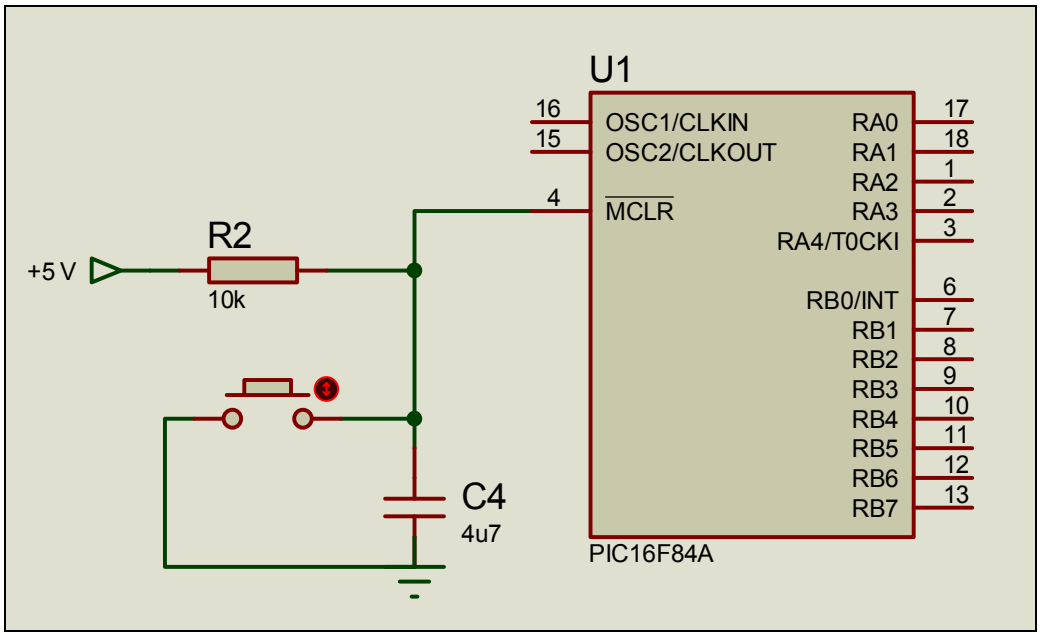

Figure 3.8 Reset circuit

3.1.3 RF-TX-433 RF Transmitter Module

In this system when the person entered the monitored area, the PIC in monitored area will send an electrical signal to the RF transmitter to generate the Radio Frequency (RF) signal at the certain frequency and send it to Transmitting antenna where the electrical signal radiates into space as an electromagnetic (EM) wave. This EM wave will be received by a receiving antenna in Monitoring Room which converts it back to an electrical signal and send it to the RF Receiver to provide output functions to the PIC and turn ON the LED indicator for monitored area in order to indicate the presence of a person in monitored area**.** To convert the electrical signal into EM wave and vice versa an encoder and decoder is used.

When the person leave the monitored area, the PIC in monitored area will send electrical signal to the transmitter to generate RF signal, which will be send as input to the PIC in monitoring room to turn OFF the LED indicator for monitored area to show there is no more presence of person in monitored area.

These RF Transmitter Modules used in this project is TX-433 it manufactured by Cytron Technologies. It is very small in dimension and has a wide operating voltage range (3V-12V). This transmitter transmits RF signals upon reception of digital serial data from its Data In pin. It uses the Amplitude Shift Keying modulation, detailed explanation of which is given in chapter 2.2.1.3.The low cost RF Transmitter can be used to transmit signal up to 100 meters (the antenna design, working environment and supply voltage will seriously impact the effective distance). Electrical characteristics of the transmitter showed in table 3.1. Out of the 315 MHz and 433 MHz versions, this project used the 433 MHz version of the transmitter.

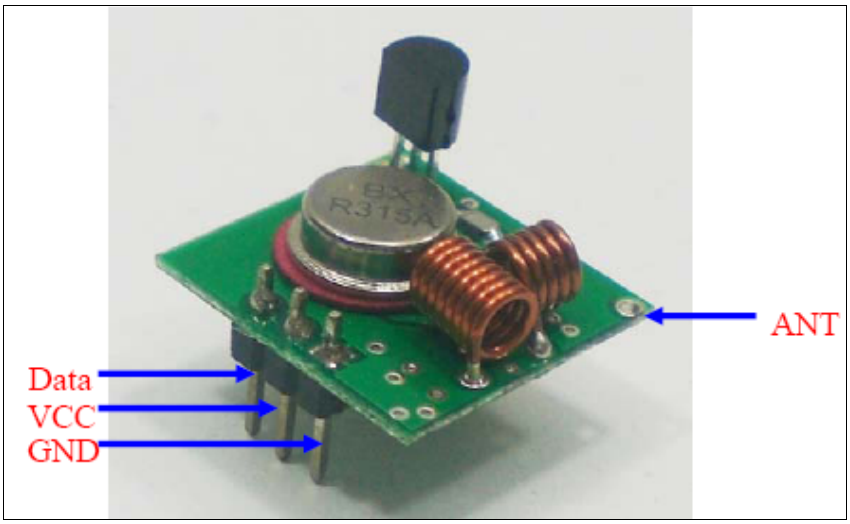

Figure 3.9 433MHz Transmitter and pins

Table 3.2 : Electrical characteristics of transmitter

No.	Specification	RF Transmitter Module
1	Operating Voltage	3V to 12 V
2	Operating Current	Max ≤ 40mA (12V). Min ≤ 9mA (3V)
3	Oscillator	SAW (Surface Acoustic Wave) oscillator
4	Frequency	315 ≈ 433.92 MHz
5	Frequency Error	± 150 kHz (max)
6	Modulation	ASK / OOK
7	Transfer Rate	≤ 10 Kbps
8	Transmitting power	25mW
9.	Antenna Length	18cm

3.1.3.1 HT12E 2^{12} Series Encoder

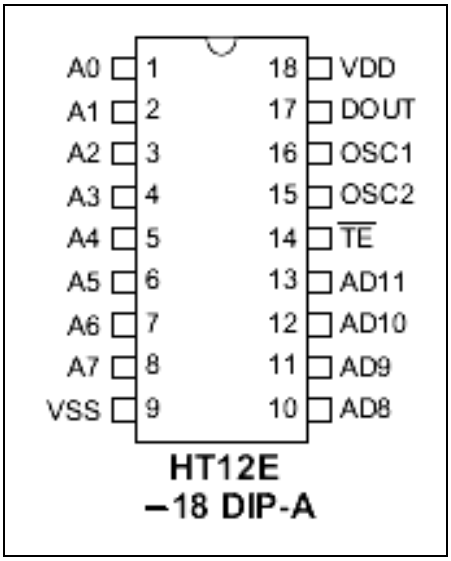

Figure 3.10 Holtek HT12E Encoder

The HT12E encoder is a CMOS IC built especially for wireless system applications. It is capable of encoding 8 bits of address (A0-A7) and 4 bits of data (AD8- AD11) information. Each address/data input can be set to one of the two logic states, 0 or 1. Grounding the pins is taken as a 0 while a high can be given by giving +5V or leaving the pins open (no connection). Upon reception of transmit enable (TE-active low), the programmed address/data are transmitted together with the header bits via an RF medium.

Features of HT12E

- 2.4-12V Operation
- Low power, high noise immunity CMOS technology
- Low standby current of < 1μA at 5V supply
- Built-in oscillator with only a 5% resister
- Minimal external components

Table 3.3 : Pin Descriptions for HT12E

Pin Name	I / O	Internal Connection	Description
A0-A7	I	NMOS TRANSMISSION GATE	Input pins for address A0-A7 setting. They can be externally se to VDD or VSS.
AD8-AD11	I	NMOS TRANSMISSION	Input pins for address A8-A11 setting. They can be externally se to VDD or VSS.
DOUT	O	CMOS OUT	Encoder data serial transmission output
TE	I	CMOS IN Pull-High	Transmission enable, active low
OSC 1	I	OSCILLATOR 1	Oscillator input pin
OSC 2	O	OSCILLATOR 1	Oscillator output pin
VSS	I	-	Negative power supply (GND)
VDD	I	-	Positive power supply

Table 3.4 : Electrical Characteristics for HT12E

Symbol	Parameter	Test Conditions		Min.	Typ.	Max.	Unit
		V_{DD}	Conditions				
V_{DD}	Operating Voltage	—	—	2.4	5	12	V
I_{STB}	Standby Current	3V	Oscillator stops	—	0.1	1	μA
		12V		—	2	4	μA
I_{DD}	Operating Current	3V	No load, f_{OSC}=3kHz	—	40	80	μA
		12V		—	150	300	μA
I_{DOUT}	Output Drive Current	5V	V_{OH}=0.9V_{DD} (Source)	–1	–1.6	—	mA
			V_{OL}=0.1V_{DD} (Sink)	1	1.6	—	mA
V_{IH}	"H" Input Voltage	—	—	0.8V_{DD}	—	V_{DD}	V
V_{IL}	"L" Input Voltage	—	—	0	—	0.2V_{DD}	V
f_{OSC}	Oscillator Frequency	5V	R_{OSC}=1.1MΩ	—	3	—	kHz
$R_{\overline{TE}}$	$\overline{TE}$ Pull-high Resistance	5V	$V_{\overline{TE}}$=0V	—	1.5	3	MΩ

3.1.3.2 Encoder Operation

The encoder starts a 4 word transmission cycle upon reception of a transmit enable (TE active low). This cycle repeats itself as long as TE is held low. Once the TE goes high, the encoder completes its final cycle and stops as shown in Fig 3.4 below.

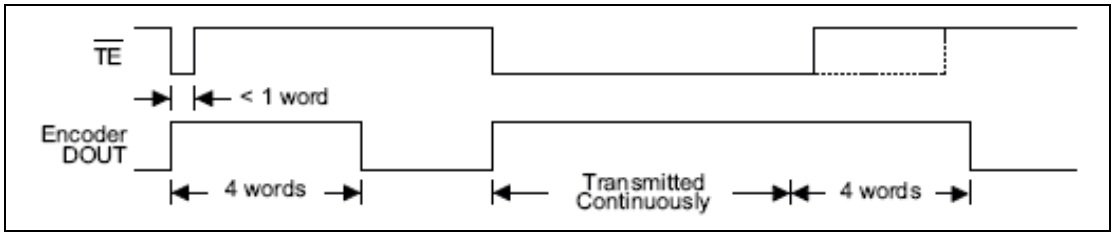

Figure 3.11 Encoder cycle timing

As soon as a transmit enable occurs, the encoder scans and transmits the status of the 12 bits of address/data serially in the order A0 to AD11.

3.1.3.3 Encoder Operation Flowchart

The above operation in chapter 3.1.3.2 can be represented by a flowchart as shown below in Figure 3.12

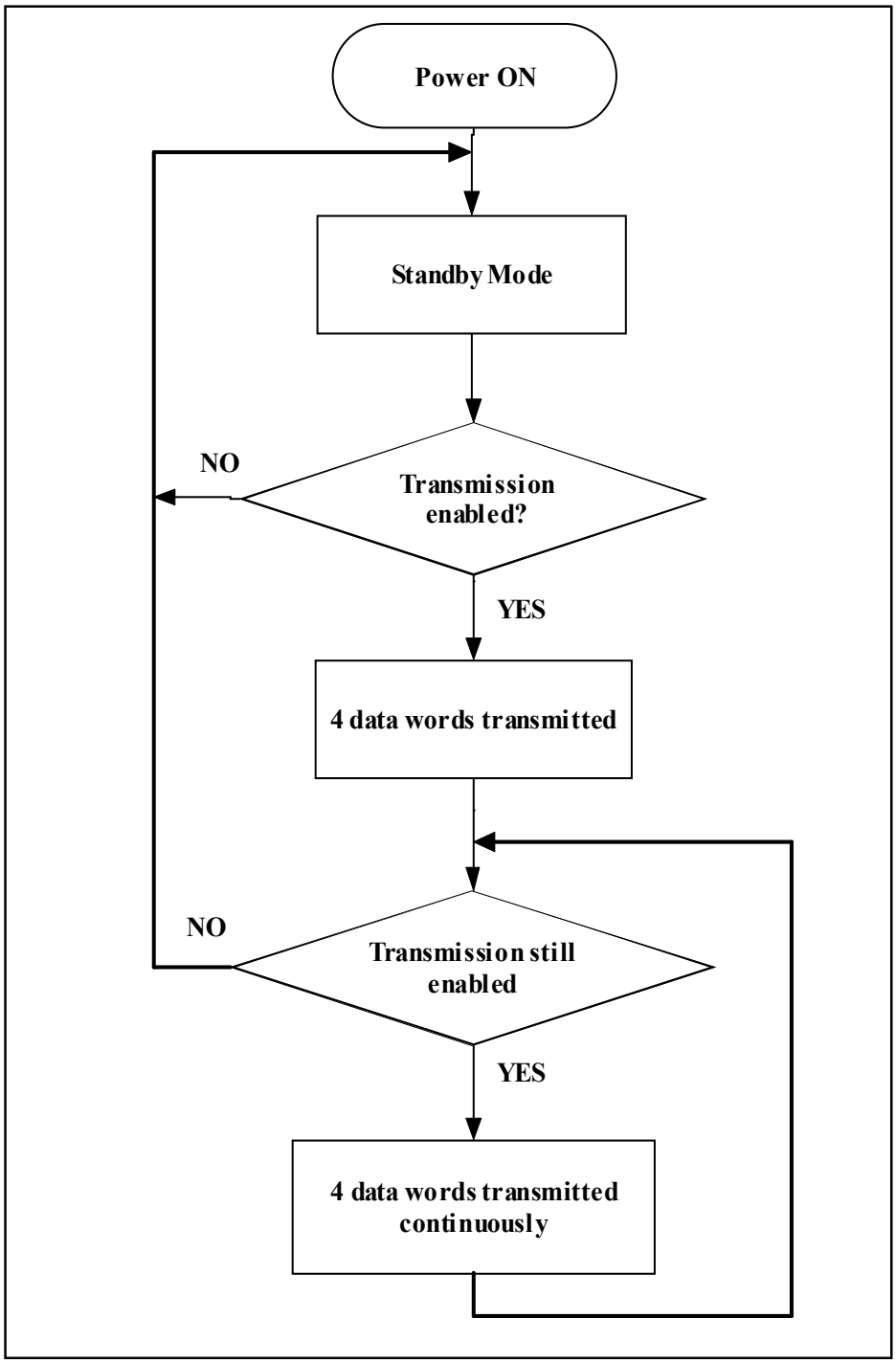

Figure 3.12 Encoder operation flowchart

As an illustration of the way the data is sent serially, if all the 8 address lines were left open (no connection) and all 4 data lines were grounded, then the serial output would look like:

Table 3.5 : Transmitted information

Pilot &	A0	A1	A2	A3	A4	A5	A6	A7	AD8	AD9	AD10	AD11
Sync.	1	1	1	1	1	1	1	1	0	0	0	0

As stated earlier in chapter 3.1.3.2, all open circuit address lines will be read as logic high and all 4 data bits will be read as 0 since they were grounded.

3.1.3.4 Encoder oscillation Frequency

Since the encoder comes with a built in RC oscillator, its oscillation frequency can be set by connecting a resistor between OSC1 (pin 16) and OSC2 (pin15). The oscillation frequency depends on the resistor value as well as the supply voltage, as shown in Figure. 3.13. This project will use a 5V supply hence will use a 1MP resistor to attain a 3 kHz oscillation.

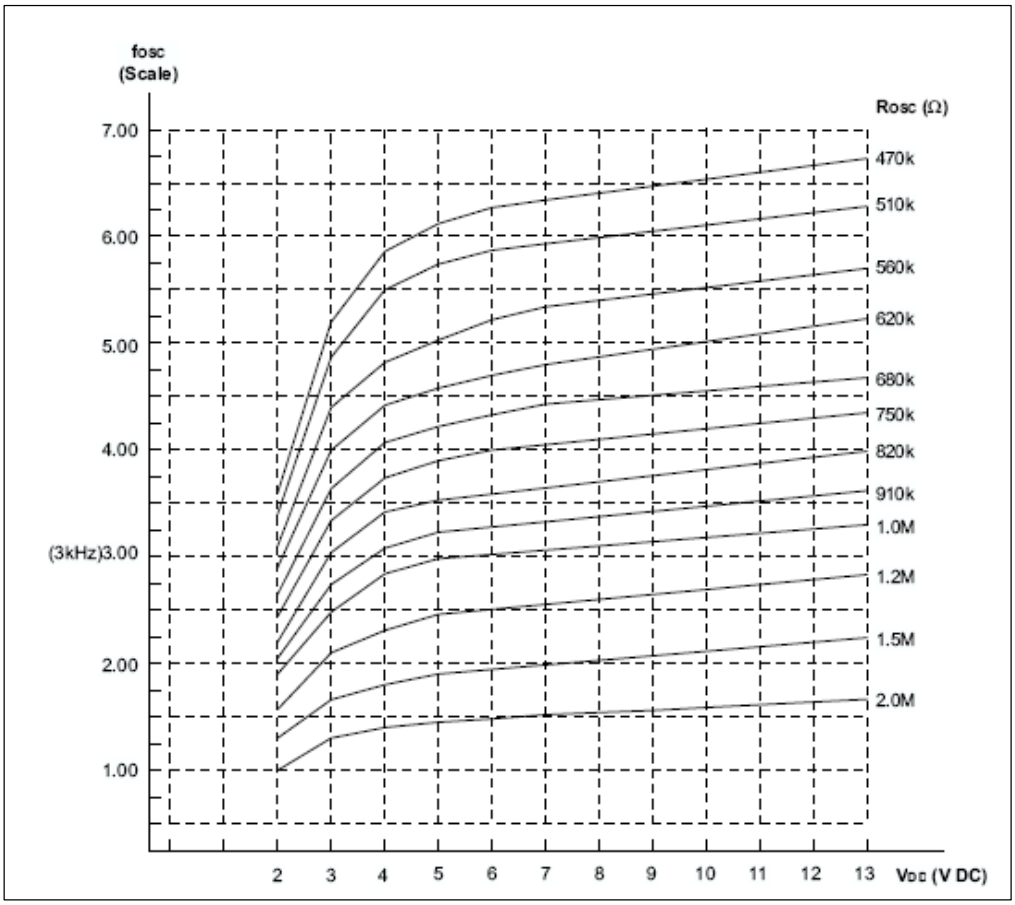

Figure 3.13 Encoder oscillation graph

3.1.4 RF-RX-433 RF Receiver Module

These RF receiver modules are very small in dimension. The low cost RF Receiver can be used to receive RF signal from transmitter at the specific frequency which determined by the product specifications. Super regeneration design ensure sensitive to weak signal. It operates between 0.5 to 5.0V and also has an analog output (linear out) for received signal testing purposes. Cytron Technologies provides 2 types of RF Receiver Modules at either 315MHz or 433MHz for user, in this project receiver 433 MHz used.

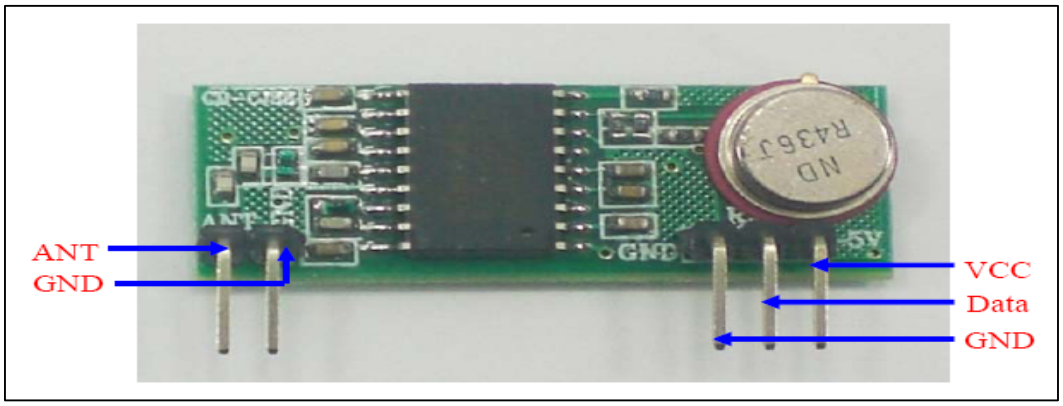

Figure 3.14 433MH Receiver and pins

Table 3.6 : Electrical characteristics of Receiver

No.	Specification	RF Receiver Module
1	Operating Voltage	5.0V ± 0.5V
2	Operating Current	≤ 5.5mA @ 5.0V
3	Operating Principle	Monolithic super heterodyne receiving
4	Modulation	OOK / ASK
5	Frequency	315MHz, 433.92 MHz
6	Bandwidth	2MHz
7	Sensitivity	-100dBm
8	Rate	≤ 9.6 Kbps
9.	Data Output	TTL
10	Antenna Length	18cm

2^{12}

3.1.4.1 HT12D 2^{12} Series Decoder

The HT12D is a decoder IC made especially to pair with the HT12E encoder. It is a CMOS IC made for remote control system applications. The decoder is capable of decoding 8 bits of address (A0-A7) and 4 bits of data (AD8-AD11) information. Like the encoder, this decoder's address pins can be set to logic low by grounding and set to logic high by either connecting the pins to +5V or leaving them open (no connection). The decoder receives serial addresses and data from a

programmed encoder transmitted by a carrier using RF or an IR transmission medium.

Features of HT12D

- 2.4 – 12V operation
- Low power and high noise immunity CMOS technology
- Low standby current of < 1μA at 5V supply
- Binary address setting
- Three times of received address checking
- Built-in oscillator with only a 5% resistor
- Valid transmission indicator
- Easy interface with a RF or IR transmission medium
- Minimal external components

3.1.4.2 Decoder Operation

HT12D receives digital serial data from its DIN (pin 14). A signal in the DIN activates the oscillator which then decodes the incoming address and data. Figure 3.15 below shows how the decoder corresponds to the data sent by the encoder.

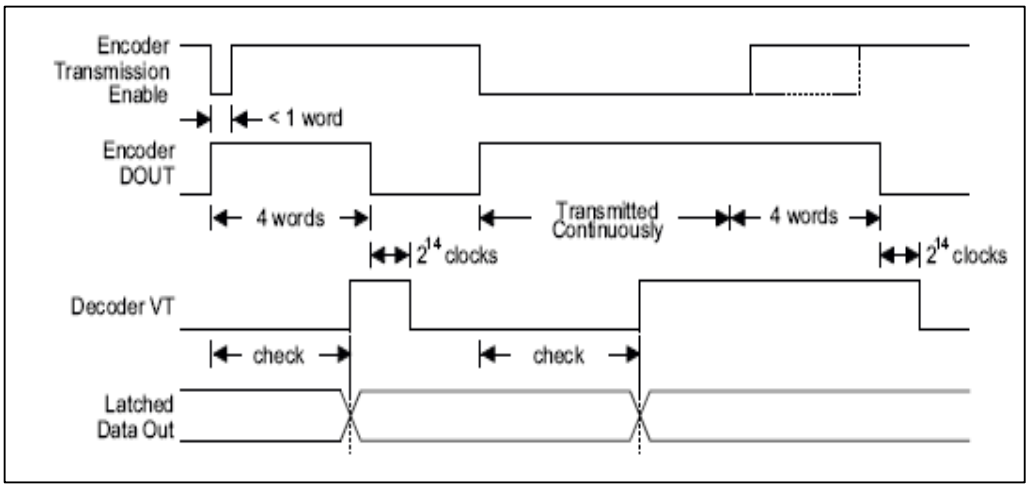

Figure 3.15 Decoder Timing

After decoding, it then checks the serial input data three times continuously with its local addresses. If no error or unmatched codes are found, the input data codes are decoded and then transferred to the data output pins. The valid transmission (VT- pin 17) also goes high to indicate a successful transmission. This pin remains high for 214 = 16384 decoder clocks after the encoder's DOUT pin goes low. Since the decoder operates at 150 kHz, it takes 150000-1 * 16384 = 0.1 seconds for the VT pin to go low. This pin also goes low if the address code is incorrect or no signal is received. The 4 data pins are latched to their respective pins, meaning that the previous data remains on the pins unless a new data arrives to replace the existing one.

3.1.4.3 Decoder Operation Flowchart

The decoder operation described in chapter 3.4.1.1 can be represented by a flowchart as shown below in Fig 3.8.

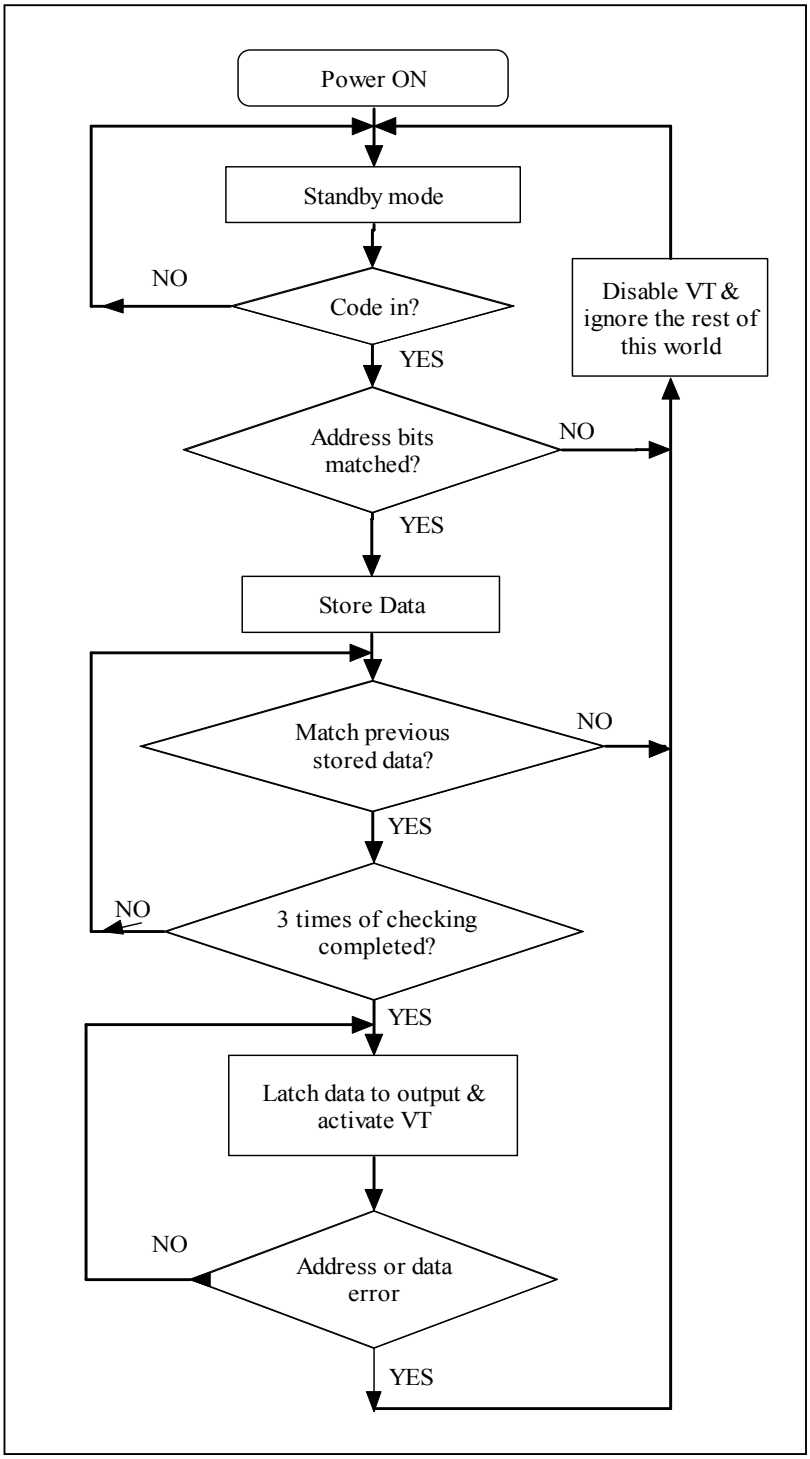

Figure 3.16 Decoder Operation Flowcharts

3.1.4.4 Decoder Oscillation Frequency

As earlier stated, the decoder has a built in oscillator hence its clock can de set by connecting a resister between OSC1 (pin 16) and OSC2 (pin 15). The oscillation frequency depends on the resistor value as well as the power supply as shown in Fig 3.17 below. This project uses a 5V supply and it is recommended by the Holtek that Oscillator frequency of decoder = 50 x oscillator frequency of encoder. Since the HT12E encoder works at 3 kHz, the decoder frequency has to be 150 kHz. This requires a 51k resistor.

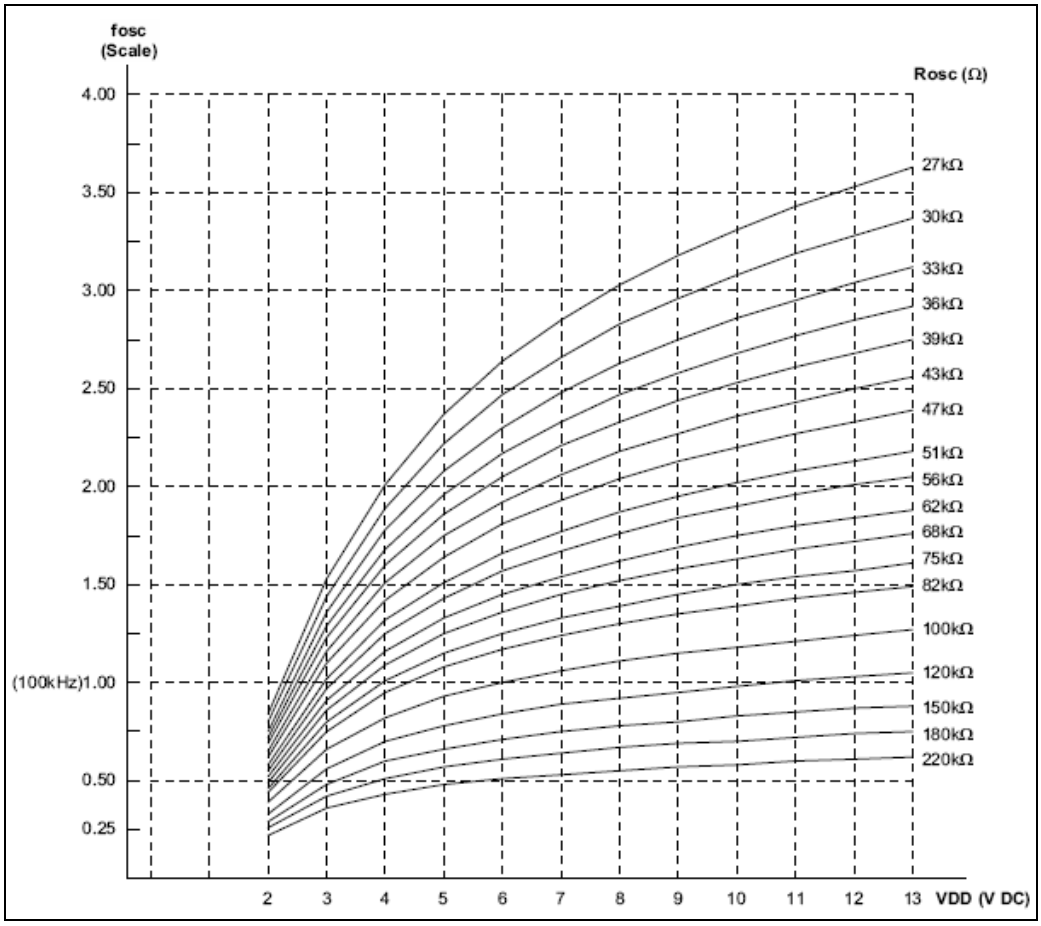

Figure 3.17 Decoder oscillation graph

3.1.5 Complete Block Diagram of the System

Figure 3.18 shows the block diagram of the room monitoring system using RF technology and PIR sensor.

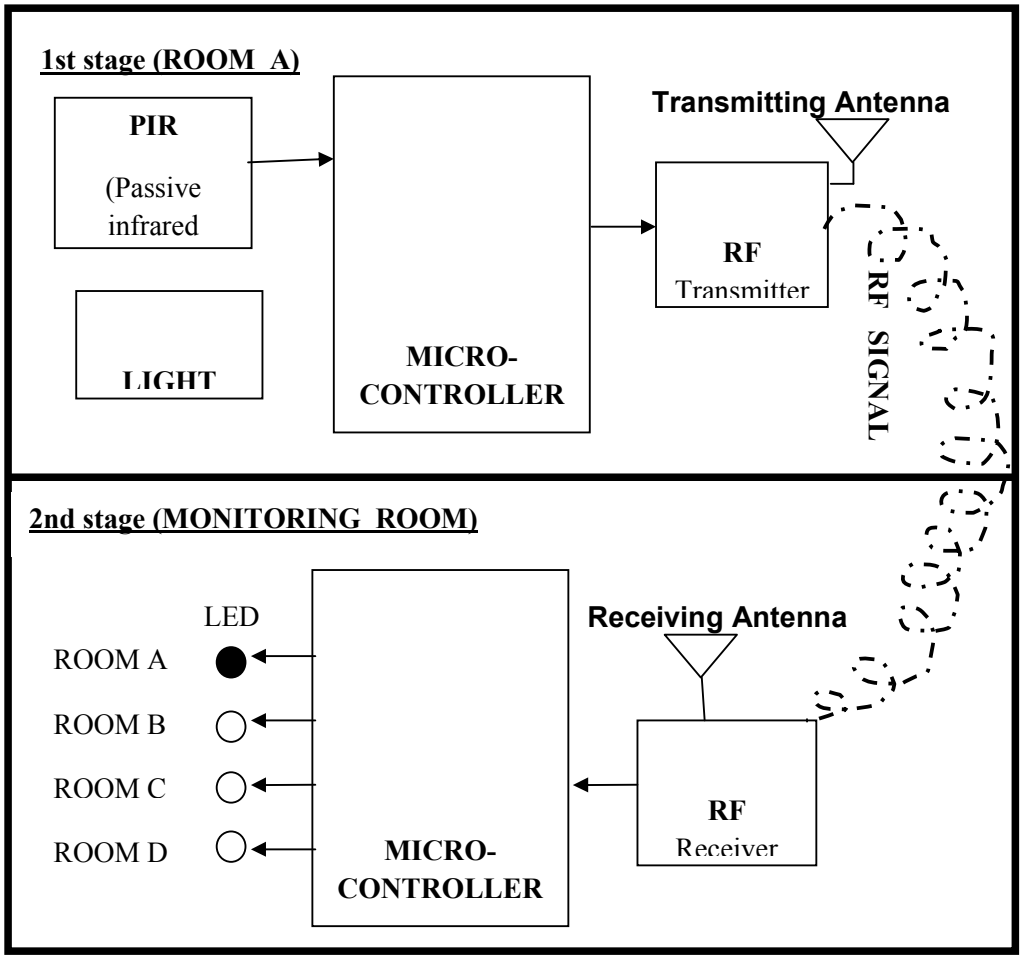

Figure 3.18 Block Diagram

3.2 Software Development

Since the project is based on microcontroller system, the development of software plays a major role in develop the system. C language is used in this project. The program is written modularly to list the module functionality. Each program is

written and assembled and then stored into EPROM using EPROM Programmer (EP). In this software development, the PIC C compiler (CCS) and UIC00A is used.

The CCS C Compiler was developed exclusively for the PIC® MCU, making it the most optimized compiler for Microchip parts. The compiler has a generous library of built-in functions, preprocessor commands, and ready-to-run example programs to quickly jump-start any project. Drivers for real-time clocks, LCDs, A/D converters, and many more are innate features to the CCS C Compiler. The 24-bit compiler - PCD makes for easy migration from 8-bit processors up to 24-bit processors with minimal user interaction. PCD has a generous CCS math function library, Flash access functions and the full range of common built-in functions and preprocessor commands that emphasize the need for a C compiler.

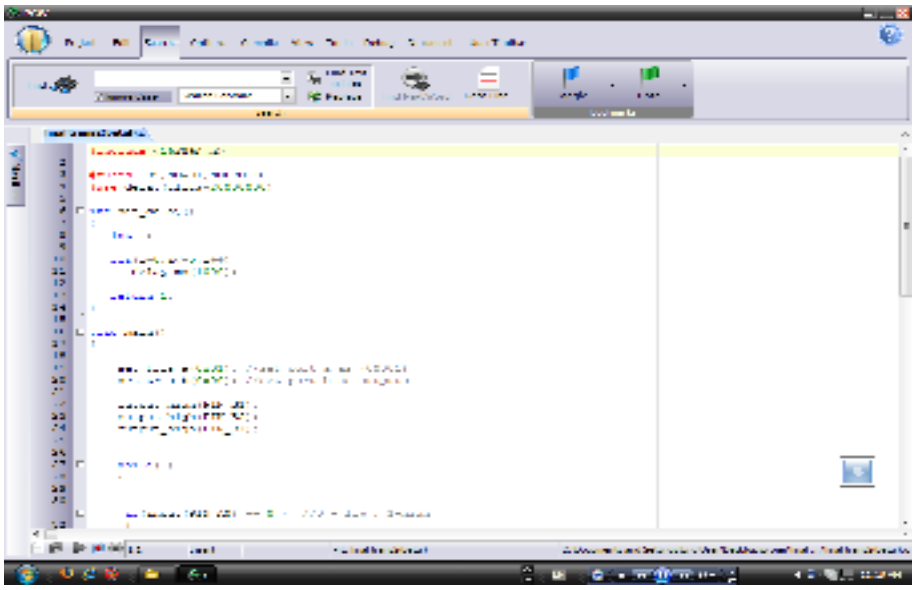

Figure 3.19 PIC C Compiler

UIC00A offers low cost yet reliable and user friendly PIC USB programmer solutions for developer, hobbyist and students. It is designed to program popular Flash PIC MCU which includes PIC12F, PIC16F and PIC18F family. It can also program 16bit PIC MCU. On board ICSPTM (In Circuit Serial Programming) connector offers flexible method to load program. It supports on board programming which eliminate the frustration of plug-in and plug-out PIC MCU. This also allow

user to quickly program and debug the source code while the target PIC is on the development board. This programmer obtained it power directly from USB connection, thus NO external power supply is required, making it a truly portable programmer. This programmer is ideal for field and general usage. UIC00A offer reliable, high speed programming and free windows interface software.

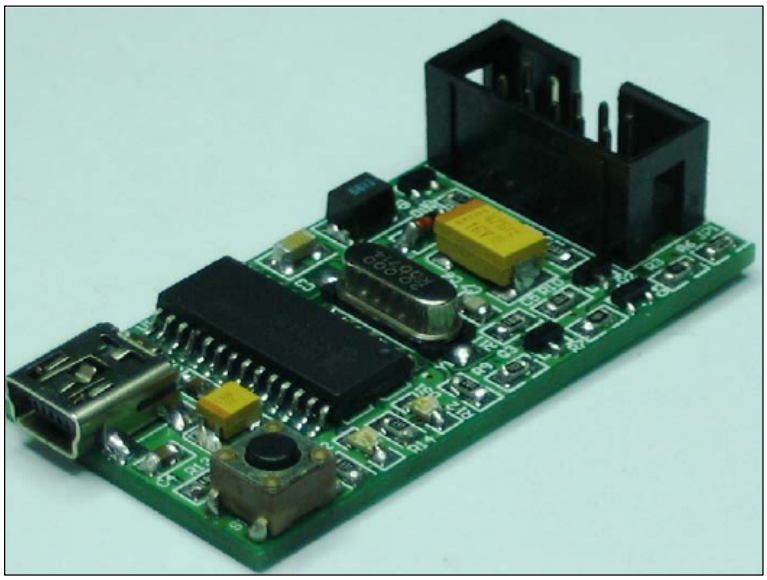

Figure 3.20 UIC00A

Since the PIC programmer automatically controls the ICSP, we don't need to know this specification to program a PIC. The following five pins are used for reading and writing the data.

Table 3.7 Pin used for reading and writing data

Pin Name	Pin No.	During Programming		
		Pin Name	Pin Type	Pin Description
RB6	12	CLOCK	I	Clock input
RB7	13	DATA	I/O	Data input/output
MCLR	4	V_{TEST} MODE	P	Program Mode Select
V_{DD}	14	V_{DD}	P	Power Supply
V_{SS}	5	V_{SS}	P	Ground

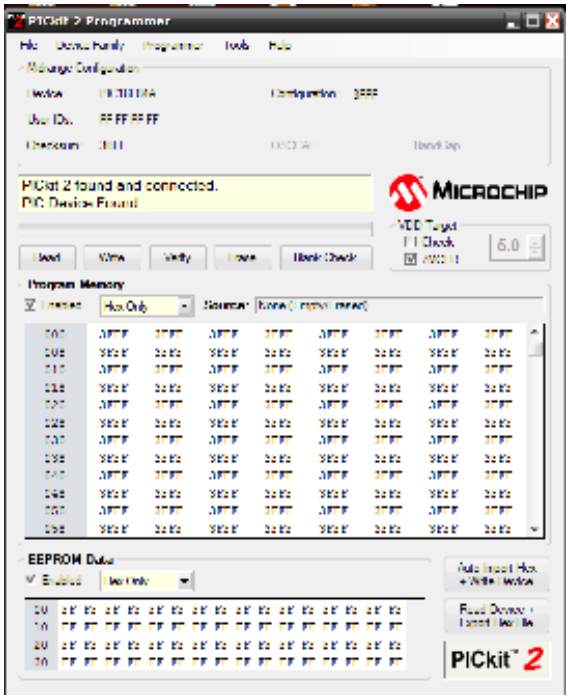

Figure 3.21 Software that used to write the program into the PIC16F84A

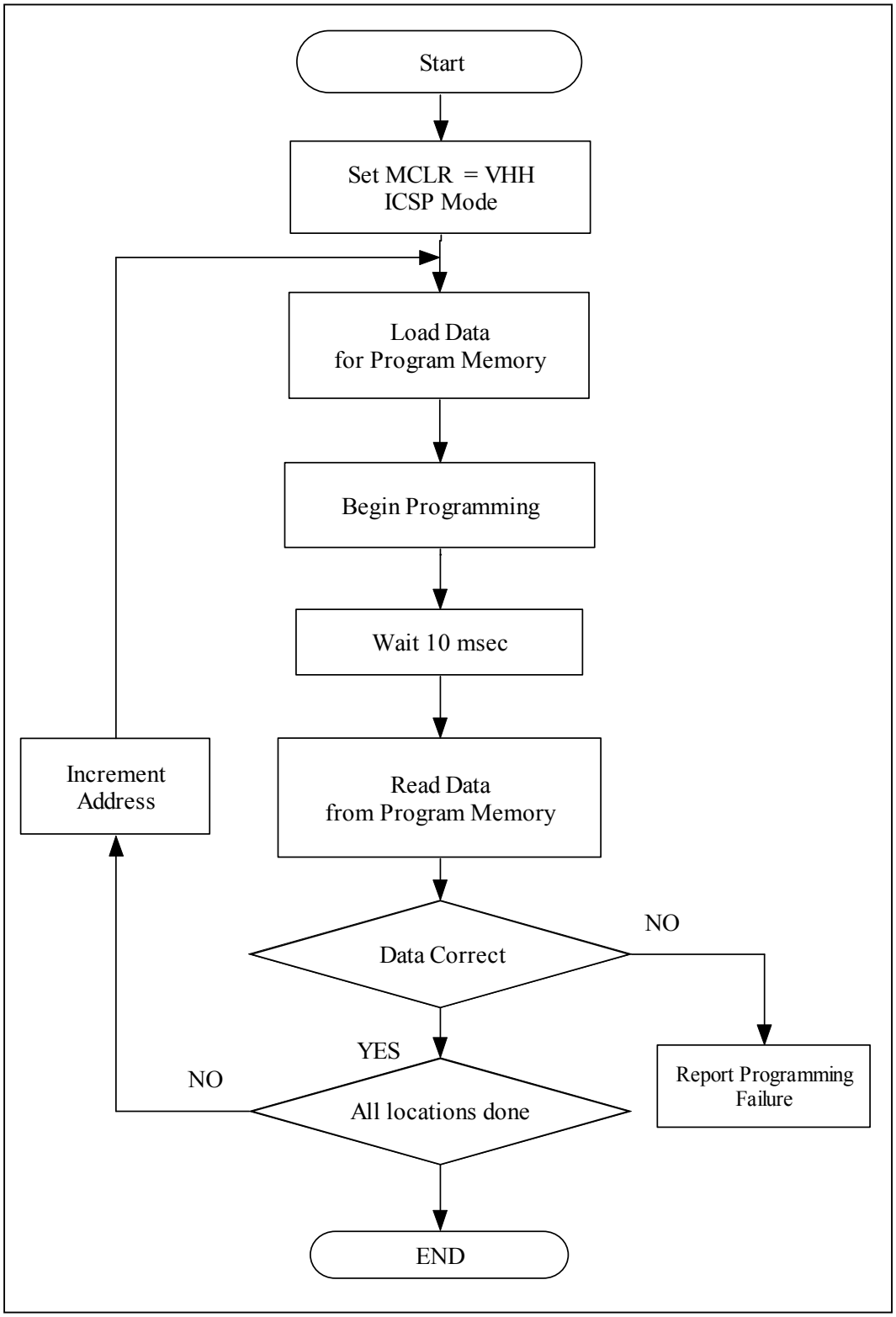

Figure 3.22 Flow chart of program memory in Verify mode

3.2.1 Flow Chart of Project

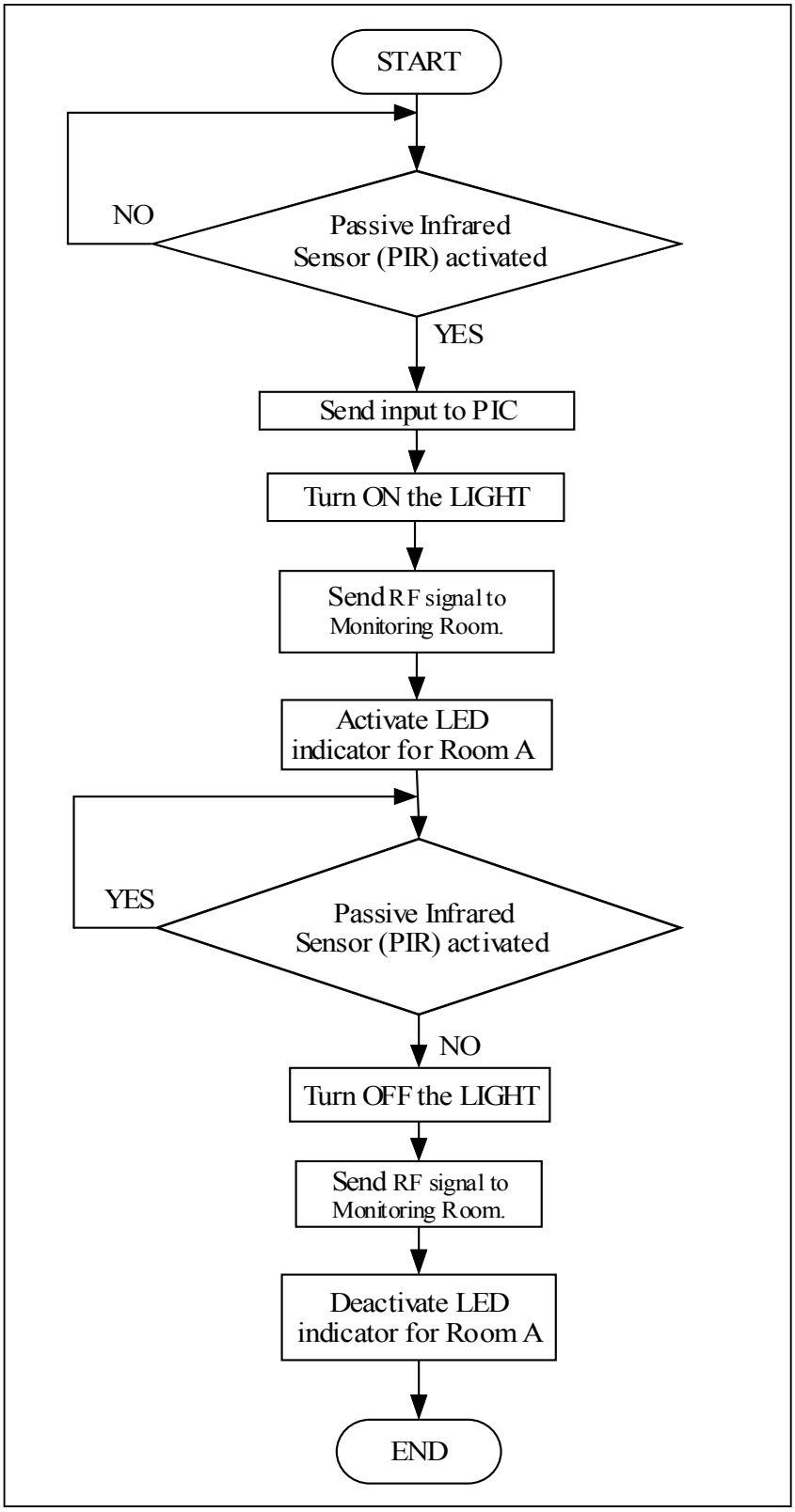

Figure 3.23 Project operation flow chart

In this project the software development dived into 2 stages. First on is the programming for transmitter boar, where the light will turn ON automatically when a person enters the monitored are. At the same time the signal will send to receiver board to inform the presence of human in monitored are.

Second stage is where the transmitter board will receive the signal from the transmitter board and display which monitored area have intruders.. in this stage the Main function of the microcontroller is to control the addressing code of decoder, so that the receiver can receive signal from many transmitter at the same time. For the full program of the system please refer to Appendix C.

CHAPTER 4

RESULT AND DISCUSSION

In order to make this system works, some part or process must be tested and trouble shoots. After each part had been tested, it will be assembly and tested again to make sure not mistaken happen in the process of building the system.

4.1 PIR Sensor Module

In the early stage of this project I have studied the functions and structure of PIR sensor, to find out which pin to be connected with the PIC16F84A. This is because the PIR sensor can be normally closed (N.C) or normally opens (N.O). To identify which one is used a 12 V has been supplied to the PIR sensor and the out when it connected to N.O and N.C were noted.

(a)

(b)

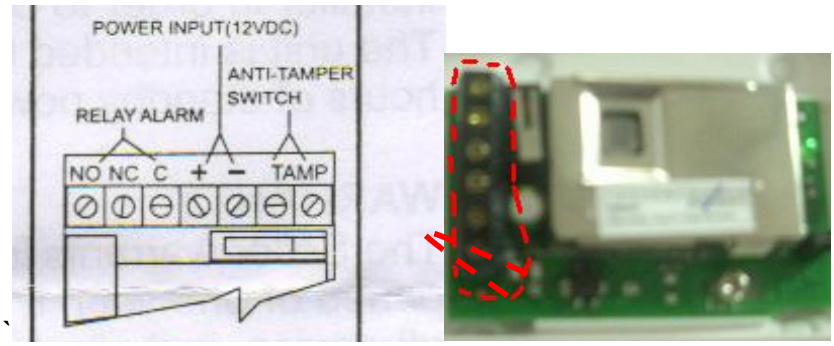

(c)

Figure 4.1 (a) Front view of PIR sensor; (b) Internal part of PIR sensor; (c) Pin connections in PIR

The connection of PIR sensor with PIC16F84A which I have constructed from the study I have done on PIR sensor shown in Figure 4.2.

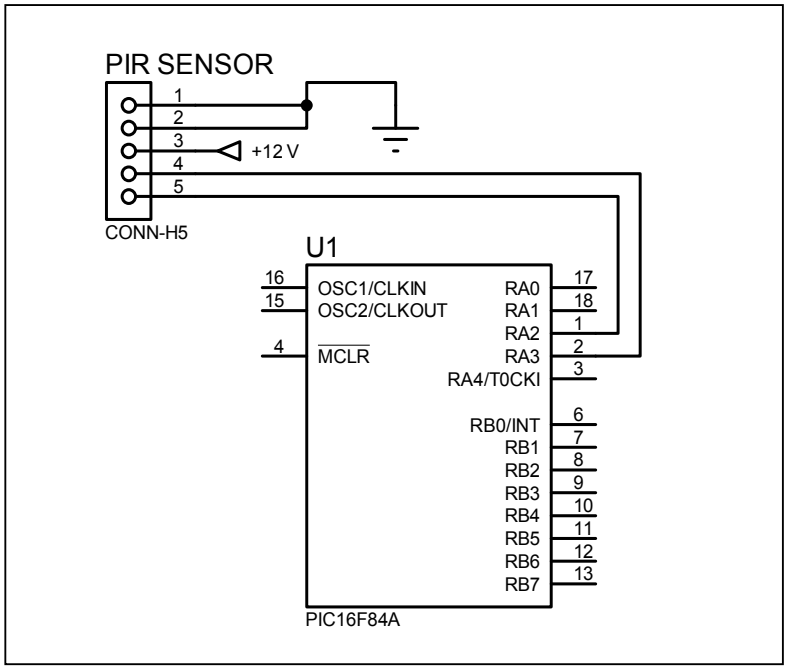

Figure 4.2 The connection of PIR and PIC16F84A

My aim for this project in stage 1 is to turn on or turn off the light when the PIR sensor activated. Before I tried the circuit for PIR sensor in PCB board, I tried first with Proteus simulation. Because there is no PIR sensor in Proteus Library, I replaced it with switch. When the switch is switch ON it represent human presence and vice versa. The circuit of this simulation showed in Figure 4.3.

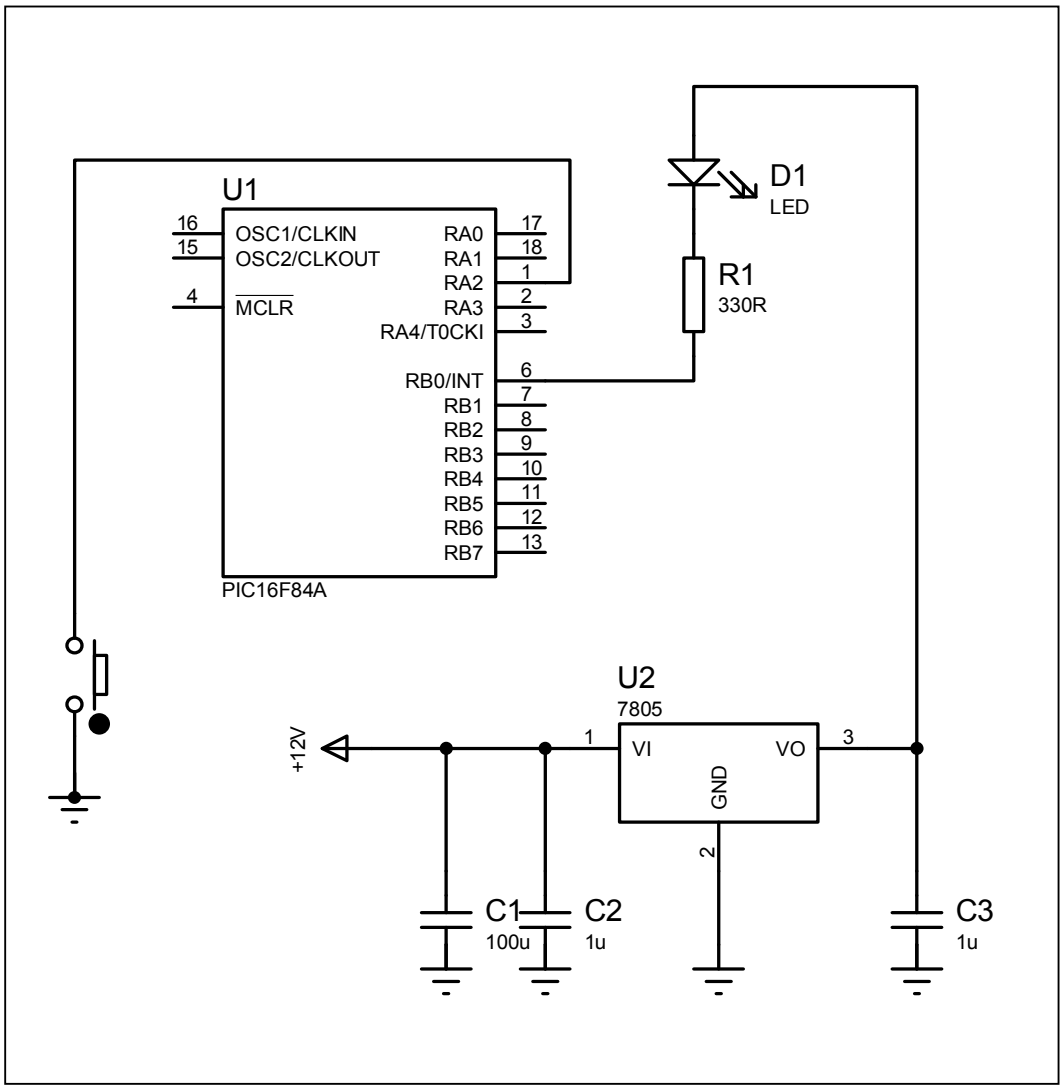

Figure 4.3 Circuit for Proteus simulation

When the simulation success, I applied the same circuit used for simulation on the PCB board, but I change back the switch to PIR sensor. Result for this application shown in Figure 4.4 below.

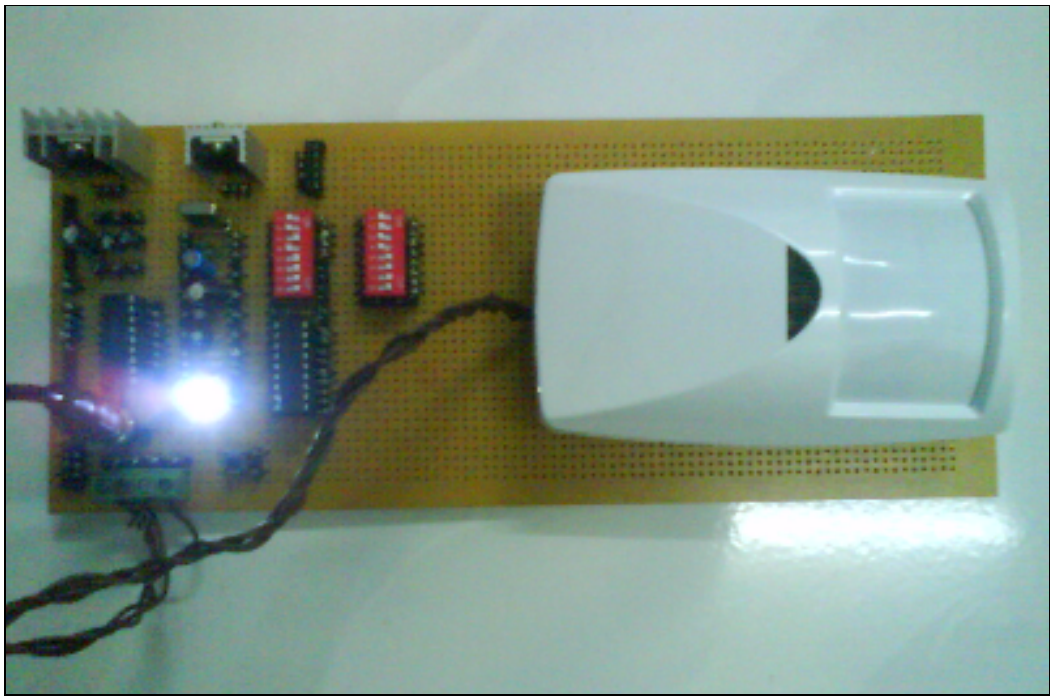

Figure 4.4 Motion detected by PIR sensor and LED is ON

4.2 PIC 16F84 A Module

Development board circuit is a circuit where the processing unit will take the main role. This circuit is the most basic circuit that must be constructed before the application board is developed. The circuit below shows the combination of power supply circuit, reset circuit and clock circuit. This circuit operates as self contained devices.

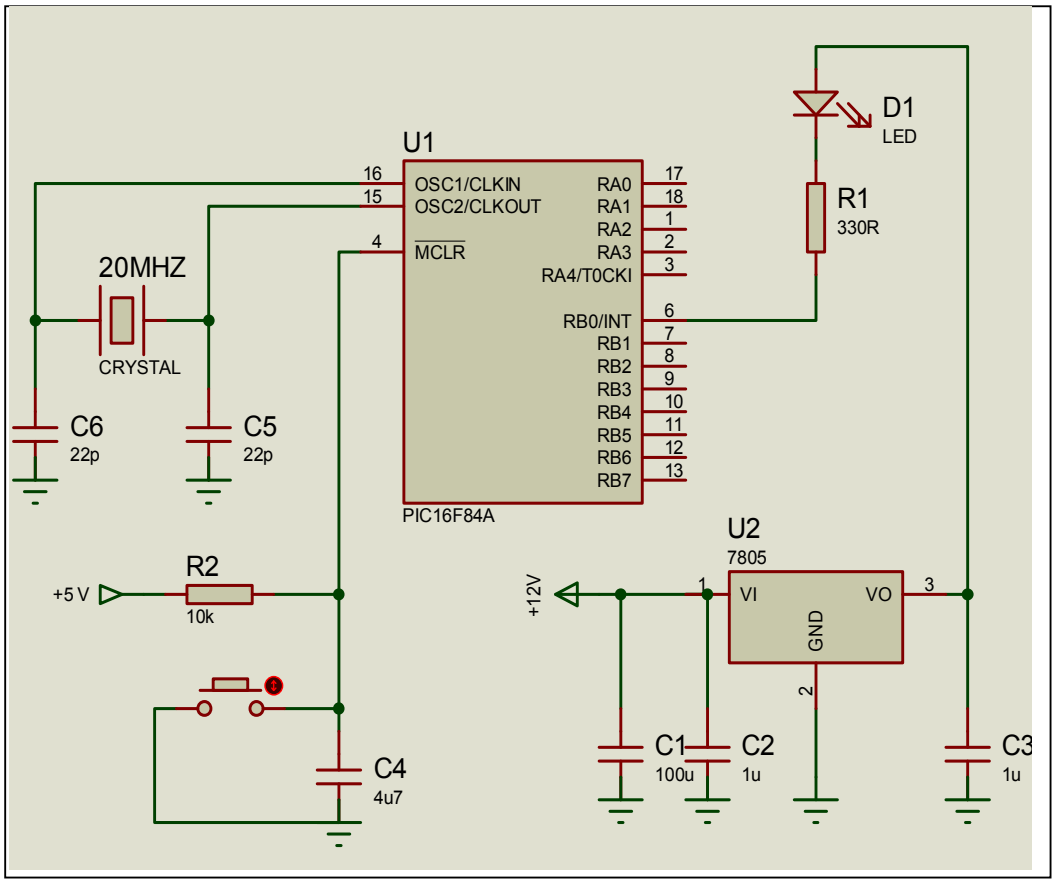

Figure 4.5 PIC 16F84A module circuit

In order to make sure the microcontroller is function or not, the clock circuit is tested using Oscilloscope. When the PIC 16F84A is working properly the oscilloscope will display a sine wave with 20MHz of amplitude. The oscilloscope displays sine wave with 20MHz of amplitude because crystal 20MHz was used in this clock circuit. The figure below shows the result of PIC module.

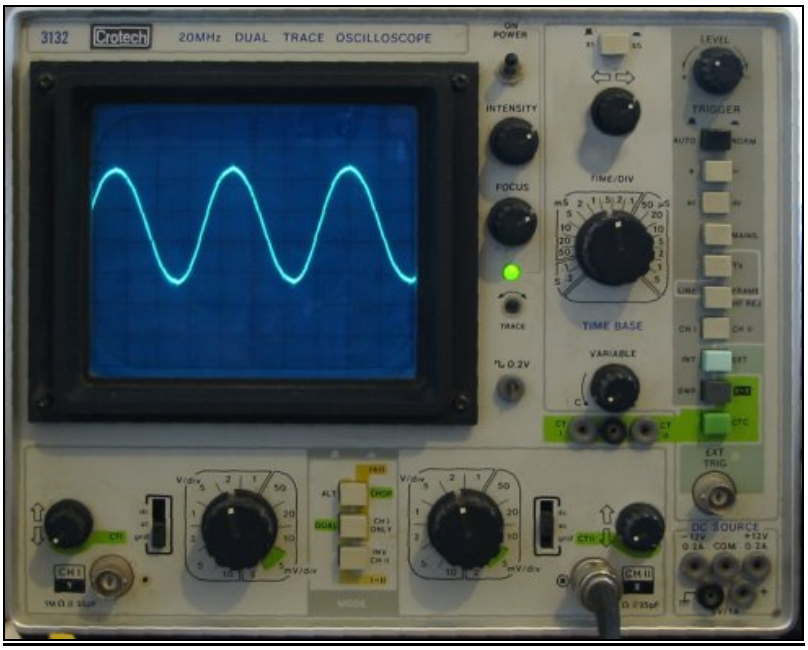

Figure 4.6 Oscillation circuit

4.3 Transmitter Module

In similar method, the transmitter module must be tested with receiver module. The transmitter is connected to the function generator and the receiver is connected to the oscilloscope as shown in Figure 4.7.

A square wave signal is generated by the function generator and the signal is received by the receiver and display on the oscilloscope. Thus, the transmitter and receiver are fully functioning.

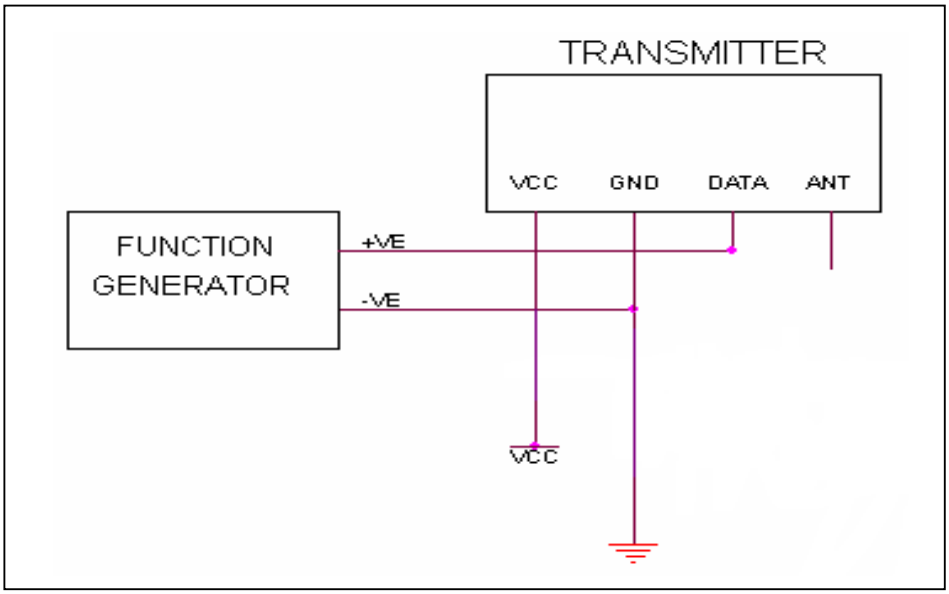

Figure 4.7 Circuit of transmitter

This transmitter must be connected to the encoder to make sure the data is directly transmitted to the receiver. The encoder is used to change a signal or data into a code. Before connected it to the transmitter, the encoder must be test to make sure it function or not.

Since the receiver can handle a maximum of 6V supply, the entire circuit is operated at 5V, even though the encoder, decoder and transmitter can handle supplies of up to 12V. The address lines for both the encoder and decoder are grounded for this circuit since a valid transmission only occurs if address values are same on both circuits.

In order to transmit, the data switches D0-D3 on the HT12E are set to the required logic levels (closed switch to represent logic low and open switch to represent logic high) and then the transmit enable (pin 14) switch is closed to enable transmission of both the 8 bit address (all zero's in this case) and 4 bit data (set by the 4 switches). The encoder outputs the 12 bit data serially using DOUT (pin 17) which goes to the TX-433 MHz transmitter which transmits the encoded signal at 433.92 MHz .This signal is received by the RX-433 MHz receiver.

The serial form of received data is passed on to the decoder which checks the addresses three times with its local addresses. Upon a match, the decoder latches the exact 4 bits data on pins D0-D3 while making the valid transmission pin high. All data information is seen on the light emitting diodes connected to the data and valid transmission pins. Hence a 4 bit data has been successfully transferred wirelessly using radio frequency. Figures 4.8 and 4.9 show the connection pin for encoder and the setup photos which was implemented on breadboard and tested. To the complete circuit of transmitter board please refer to Appendix A

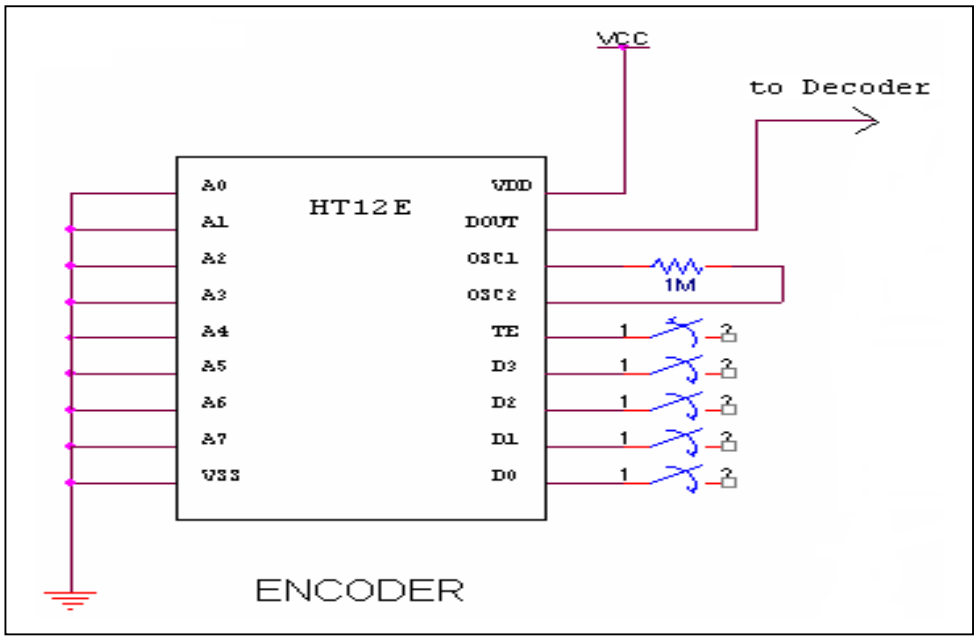

Figure 4.8 Connection pin for encoder

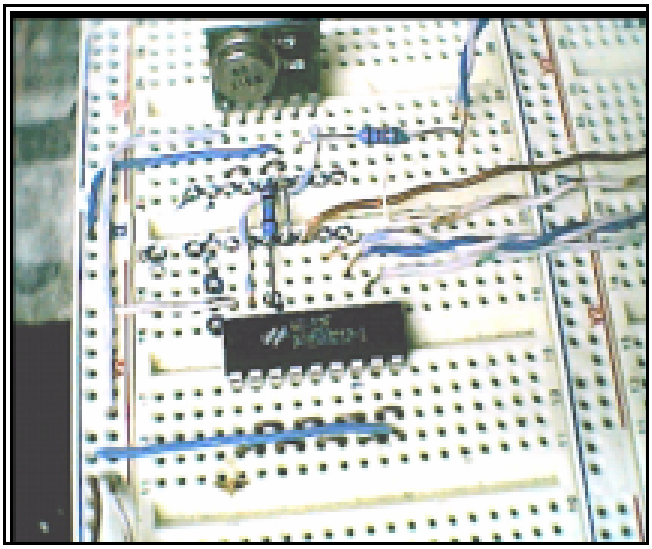

Figure 4.9 Four bit transmitter on breadboard

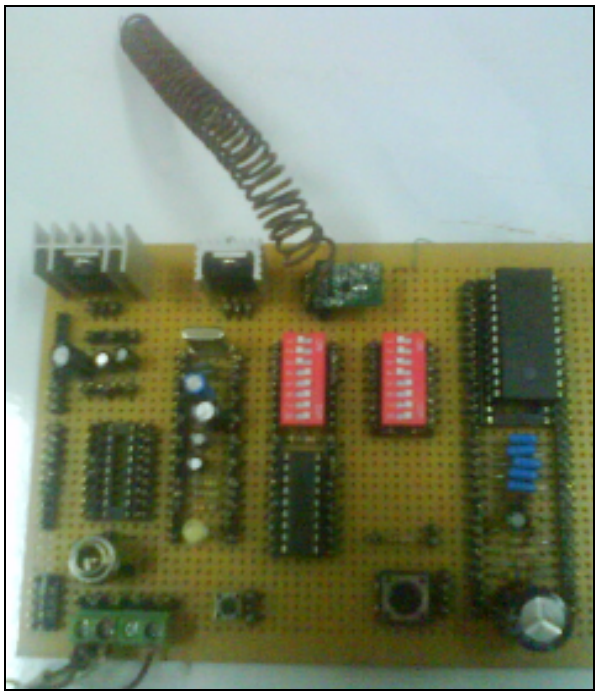

Figure 4.10 Four bit Transmitter on PCB board

4.4 Receiver module

Same as transmitter, the receiver must be test with transmitter to test it functionality. The receiver is connected to the oscilloscope and the transmitter connected to the function generator.

A square wave signal is generated by the function generator and the signal is received by the receiver and display on the oscilloscope. Thus, the transmitter and receiver are fully functioning.

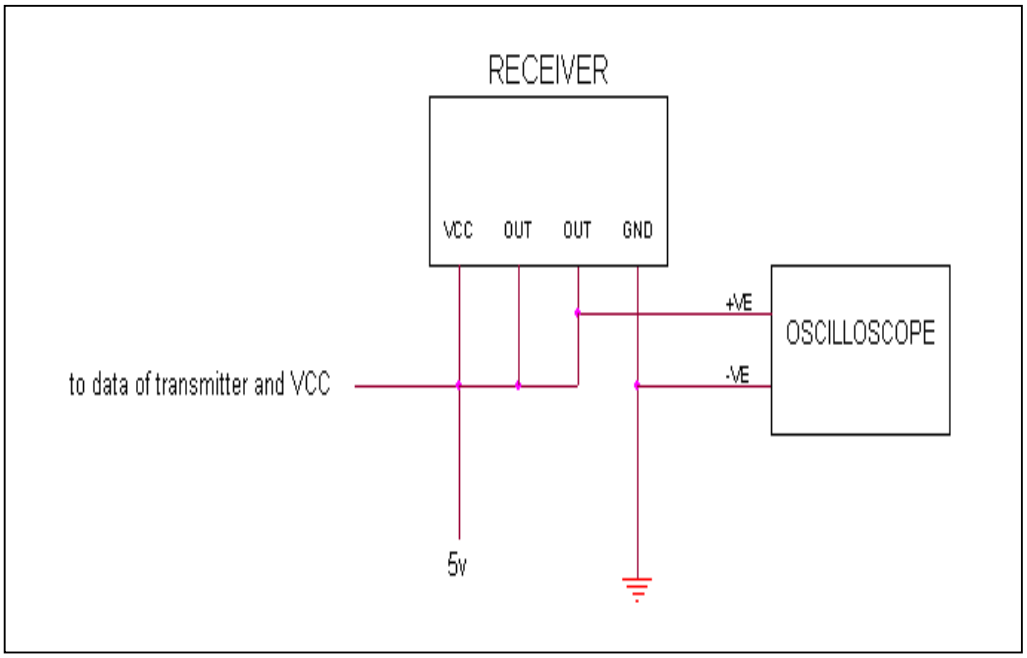

Figure 4.11 Circuit of receiver

Similar to a transmitter, the receiver must be connected to its driver to make sure the data is properly received. Decoder is used. The same method used to encode is usually just reversed in order to decode.

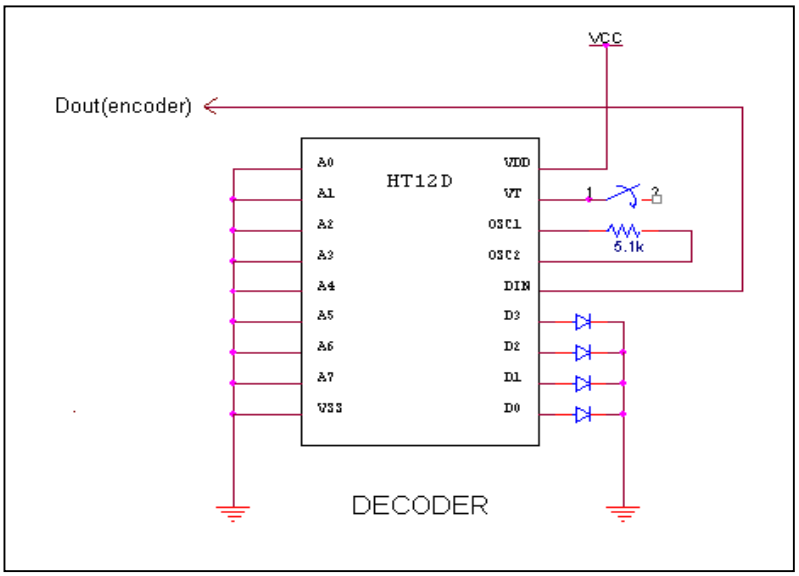

Figure 4.12 Connection pin for HT12E decoder

The decoder is tested with encoder on a trainer board. All of the address in HT12D is grounded match to encoder to make sure the data can be received.

The decoder will only receive the data from the encoder when its address is similar to the address of encoder. When the information is sent through D0-D3, the same information is received by decoder.

The oscillator is disabled in the standby state and activated when a logic high signal applies to the DIN pin. That is to say, the DIN should be kept low if there is no signal input. The setup photo which was implemented on breadboard showed in figure 4.13. For complete receiver board circuit please refer to Appendix B.

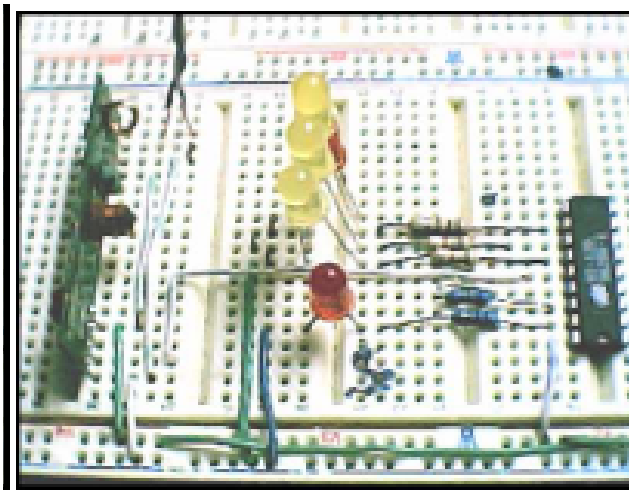

Figure 4.13 Four bit receivers on breadboard

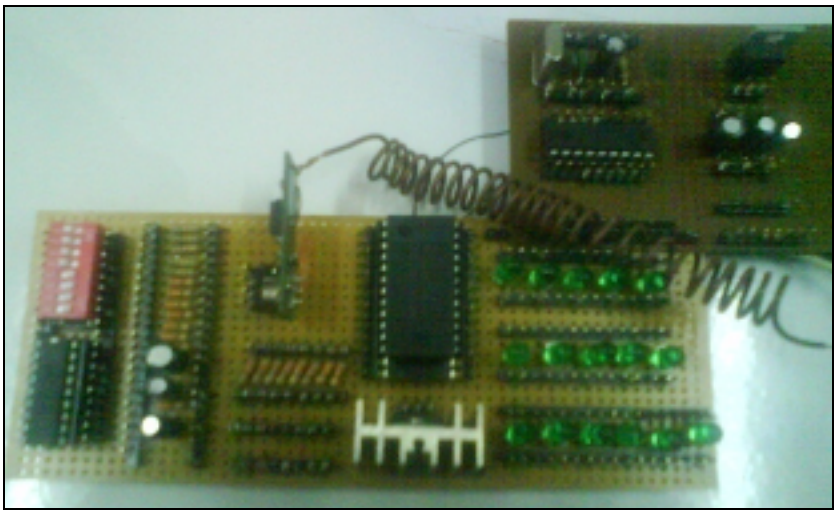

Figure 4.14 Four bit Receiver board on PCB board

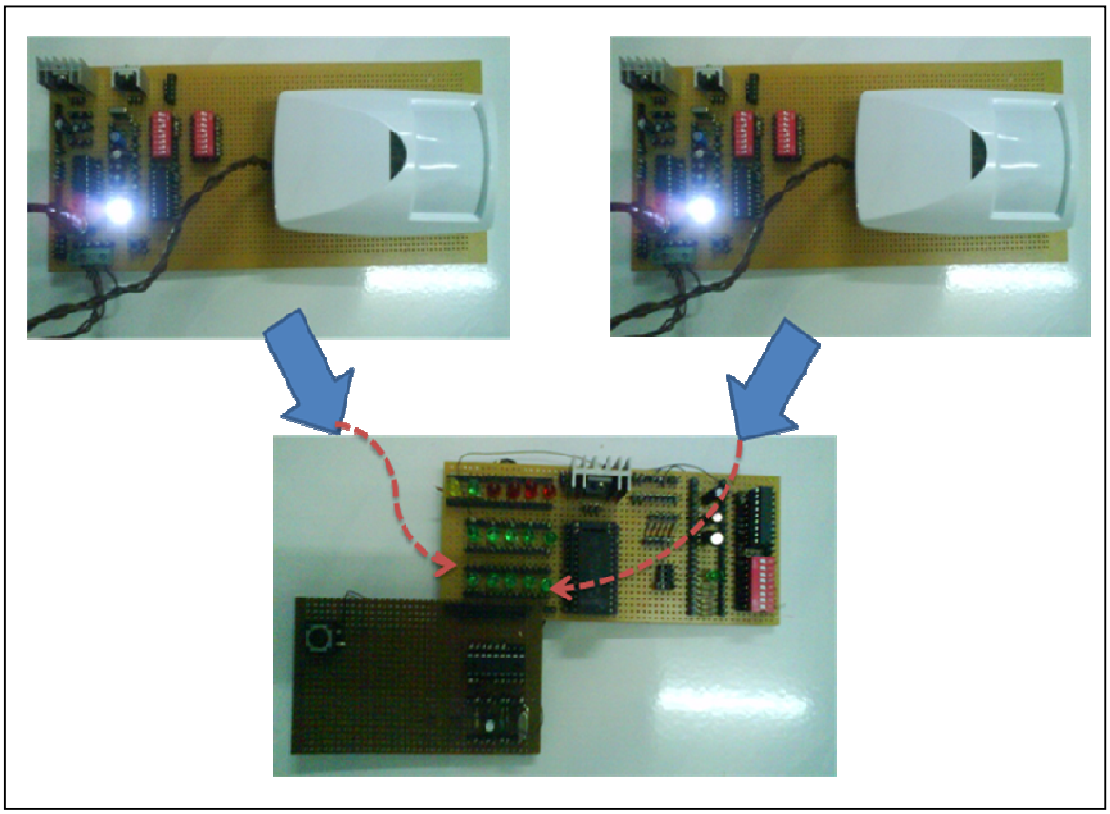

Figure 4.15 Complete Transmitter and Receiver board on PCB board

4.6 Problem and Solution

PIR device based on motion detection is new and hard to get. I managed to solve this problem by using different type of PIR sensors. But when I used different type of PIR sensor I have to make few changes in my software design because each PIR sensor has different type of characteristics.

Secondly the RF transmitter and receiver easily interrupted by signals or data from other RF module. To overcome this problem I add addressing as a security feature. The addressing is a very helpful tool in deciding which receiver is to receive the transmitted information. Because there are 8 address lines, there are 2^8 = 255 different combinations of addresses that can be formed. This means that if there was only one receiver available and 255 transmitters, the receiver can be made to pinpoint and communicate with any one of the 255 transmitter at a single time via the concept of addressing. If, for example, it was decided that the 7tli receiver out of the

255 (whose address is set as 00000111) is to receive a code, all that needs to be done is to set the transmitters encoder address to 00000111 and transmit the information. It is only the 7th receiver address which will match the transmitted data address, allowing it to have a valid transmission while the remaining 127 receivers decoder will incur address mismatch, hence the data will not be latched in this case.

Lastly the system should receive data from more than one transmitter at one time, but when I used addressing, only one data received at one time. To overcome this problem I add another PIC 16F84A at receiver board. The function of this PIC in receiver board is to change the addressing every few seconds, so that it will rotate all the addressing code and can receive data from many transmitters.

CHAPTER 5

CONCLUSION

5.1 Conclusion

This project is a unique wireless telecommunication project combined with automatic switch system. For automatic switch system PIR sensor used to detect the motion in monitored area and turn ON the light automatically. Meanwhile wireless telecommunication, this project used air as the medium to send the data from transmitter module to the receiver module. This room monitoring system using PIR sensor and RF technology detect the presence of human in monitored area and send that data or signal to the monitoring room.

The structural design for this system can be divided into two major parts that are hardware design and software development. The major hardware design consists of PIR sensor module, microcontroller module, encoder module, transmitter module, decoder module and receiver module. These modules are tested independently with the overall system to relieve the recognition of error or damaged that may occur to the devices.

Since the project is based on microcontroller system, the development of software plays a major role in develop the system. C language is used in this project.

Generally, the system design is considered achieve the main point of this project because fully functioning. The microcontroller can communicate with the other device in good condition and the program that used to control the system is

follow the instruction that given. The integration of the whole system is successfully working as desired from the beginning of this project.

5.2 Future Recommendations

There are a variety of enhancements that could be made to this system to achieve greater detection accuracy:

1) Firstly we can replace the RF with XBee

- XBee has its own software inside it, which can be programmed for certain address code. This will avoid interruption of other signal when sending or receiving the data. Furthermore the transfer rate of data in XBee is faster than RF transmitter receiver. The range of XBee is bigger compared to RF transmitter receiver, it can cover to up to 1.5 km. XBee's data transfer rate is fast 250 kbps

2) Include image recognition to detect human presence

- The current system will detect the motion of any living things, so when image recognition is added to this system, it will be more effective. The light will only turn ON if there is presence of human in monitored area.

5.3 Costing and Commercialization

Room monitoring system using RF technology and PIR sensor can be commercialized at huge place, which need constant monitoring such as

- University
- School
- Office

This system also saves electricity wastage due to negligence by users, who tend to turn off the electrical equipment. By having this system user no need to worry about electricity wastage, because this system will turn off the electrical equipment automatically when there is no intruders in monitored area.

More over this system is cheap and easy to install at any place. The overall costing of this device is as stated in table 4.1.

Table 5.1 : Total cost of Automatic Switch system

No.	Component	Specification	Estimate Cost / unit (RM)	Quantity	Estimate Cost (RM)
1	PCB header	40 ways	0.80	6	4.80
3	IC base	18 pin	0.20	2	0.40
4	Crystal	20MHz	1.50	1	1.50
6	LED	White	0.15	1	0.15
7	Doughnut board	10” x 4”	5.00	1	5.00
8	Capacitor	22pF	0.08	2	0.16
9	Capacitor	470F	0.15	1	0.15
10	Resistor	470Ω	0.05	1	0.05
11	Resistor	10kΩ	0.05	2	0.10
12	Resistor	1MΩ	0.05	1	0.05
13	RF transmitter	433MHz	25.00	1	25.00
15	PIC16F84A	18 pins	3.54	1	3.54
16	HT12E	18 pins	4.50	1	4.50
17	Wire	Single core	0.40	½	0.20
18	PIR sensor	Motion detector	75.00	1	75.00
TOTAL ESTIMATED COST (RM)					**120.60**

Table 5.2 : Total cost of Room monitoring system

No.	Component	Specification	Estimate Cost / unit (RM)	Quantity	Estimate Cost (RM)
1	PCB header	40 ways	0.80	6	4.80
3	IC base	18 pin	0.20	2	0.40
4	Crystal	20MHz	1.50	1	1.50
5	LED	Green	0.15	16	2.40
7	Doughnut board	10” x 4”	5.00	1	5.00
8	Capacitor	22pF	0.08	2	0.16
9	Capacitor	470F	0.15	1	0.15
10	Resistor	470Ω	0.05	1	0.05
11	Resistor	10kΩ	0.05	2	0.10
12	Resistor	51KΩ	0.05	1	0.05
14	RF receiver	433MHz	30.00	1	30.00
15	PIC16F84A	18 pins	3.54	1	3.54
17	Wire	Single core	0.40	½	0.20
19	HT12D	18 pins	5.00	1	5.00
TOTAL ESTIMATED COST (RM)					**53.35**

REFERENCE

[1] John Rogers , Calvin Plett, (2003). *Radio Frequency Integrated Circuit Design*: Artech House Publishing Company.

[2] Wayne Tomasi (2004). *Electronic Communications Systems Fundamentals Through advanced*: Prentice Hall Publishing Company.

[3] Yaroslav K. Trokhimenko, Former Dean *Radio electronics and Communications Systems.* The internet Protocol Journal. [Available online] http://springeronline.com/journal/11976

[4] Kymissis, J. Kendall, C. Paradiso, J. Gershenield, N. 1998, *Parasitic Power Harvesting in Shoes, Draft 2.0.* [Available online] www.media.mit.edu!resenv/pubs/paperS/98 08 PP wearcon final.pdf

[5] Millier, B. 2002, '*An RF Controlled irrigation System*', Atmel Applications Journal, Issue 138, pp. 28 - 31. [Available online] www.atmel.com/joumal/documents/issue1/irrigation.pdf

[6] Holtek, 1996, "2^{12} Series of Decoders", Holtek Semiconductors.

[7] Holtek, 1996, "2^{12} Series of Encoder", Holtek Semiconductors.

[8] 15th January 2008, Citing Internet sources URL http://www.makingthings.com/teleo.

[9] 16 January 2008, Citing Internet sources URL http://www.talkingelectronics.com

[10] 20 January 2008, Citing Internet sources URL http://www.rentron.com/PicBasic1.htm

[11] 30 January 2008, Citing Internet sources URL http://opencircuits.com

[12] 14 February 2008, Citing Internet sources URL
http://jap.hu/electronic/rf.html

[13] 3 March 2008, Citing Internet sources URL
http://www.wikipedia.org/

[14] 9 March 2008, Citing Internet sources URL
http://www.best-microcontroller-projects.com/

[15] 10 March 2008, Citing Internet sources URL
http://www.crutchfield.com

APPENDICES

APPENDIX A

Full schematic

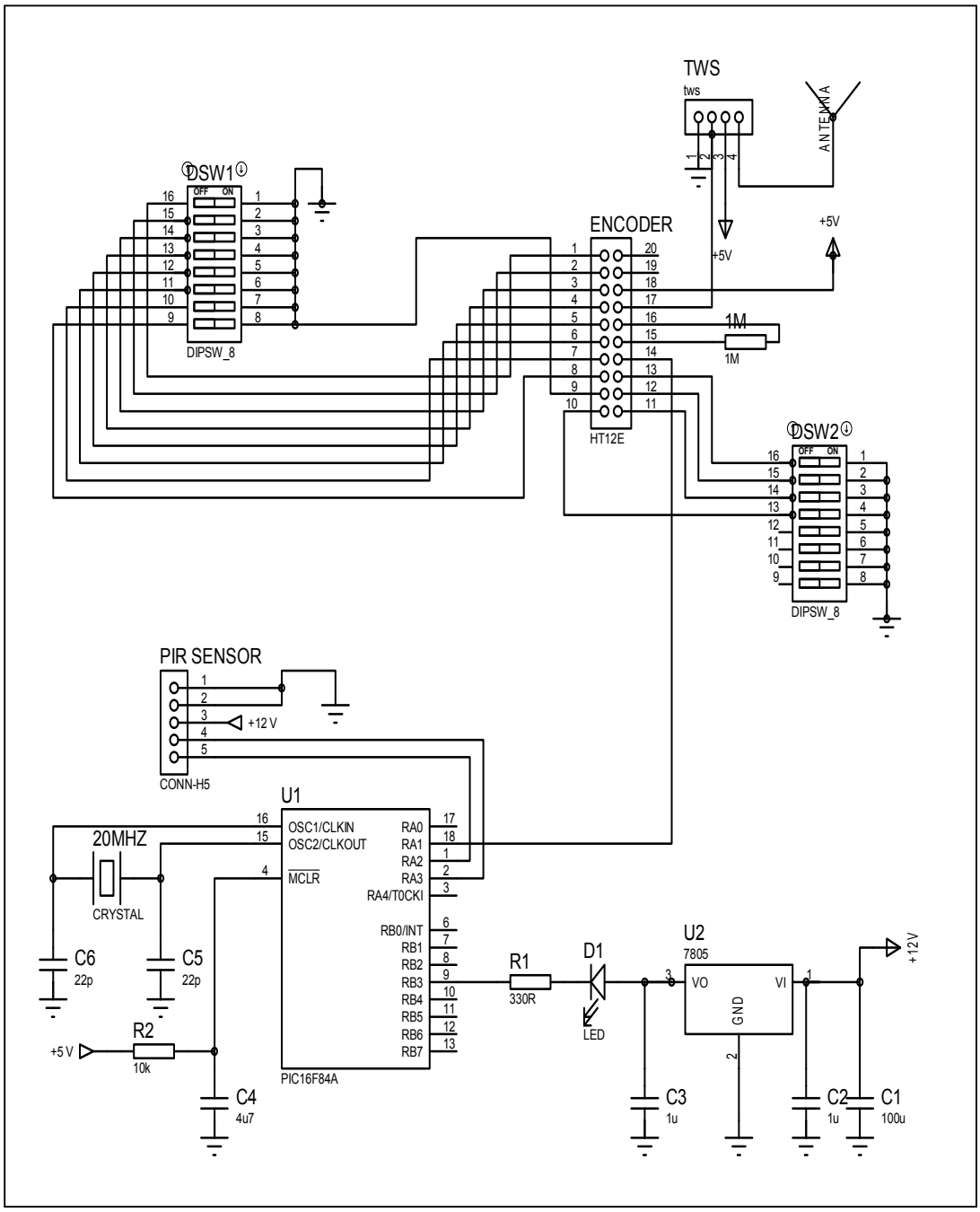

Schematic for transmitter part

APPENDIX B

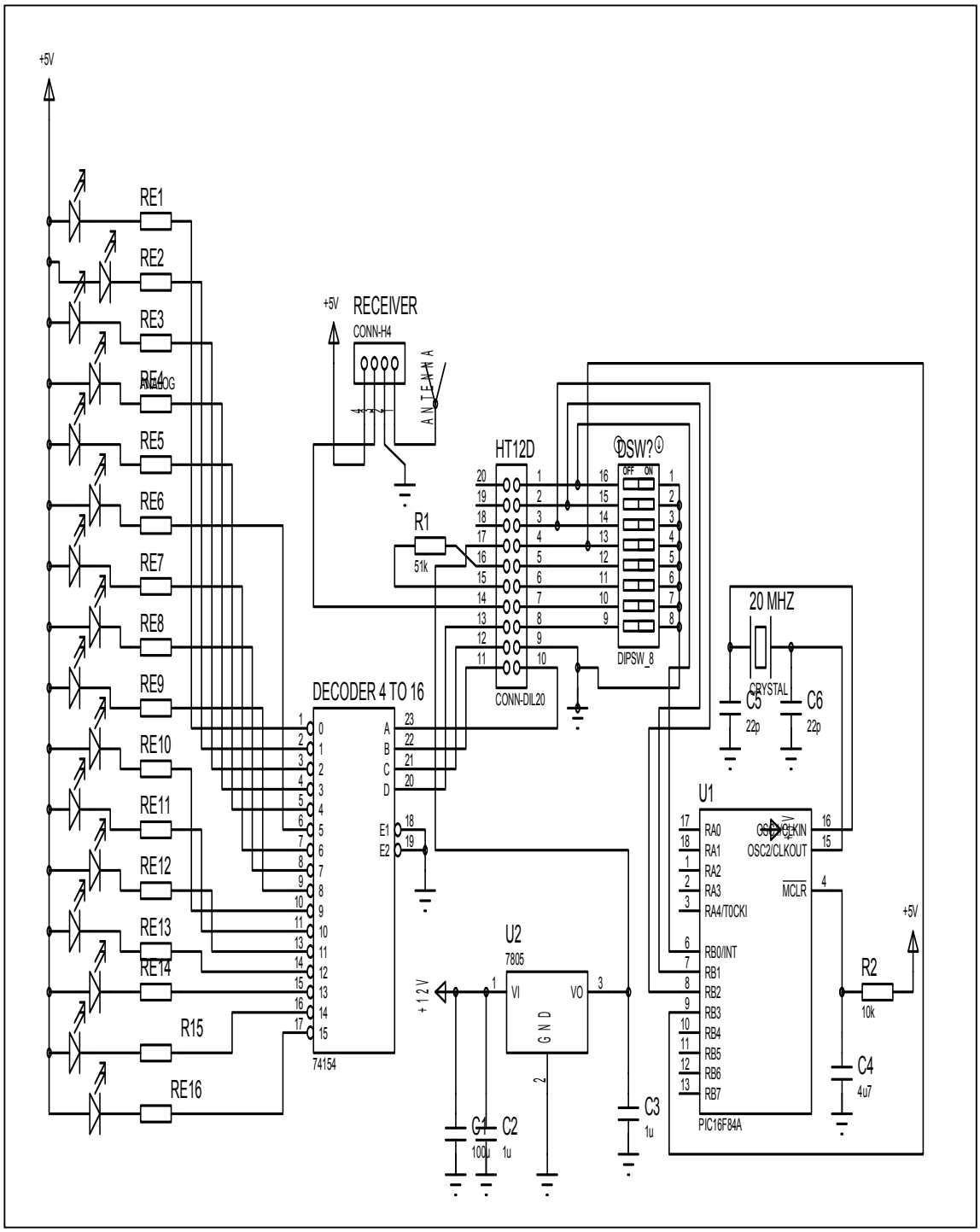

Schematic of receiver part

APPENDIX C

Full program of the system

```
#include <16F84A.h>

#fuses  HS,NOWDT,NOPROTECT
#use delay(clock=20000000)

int set_delay()
{
  int i;

  for(i=0;i<=5;i++)
     delay_ms(1000);

  return 1;
}
void main()
{

    set_tris_b(0x00); //set port b as outputs
    //output_high(PIN_B3);

    while(1)
    {

     if(input(PIN_A0) == 0 )  //0 = low ; 1=high
     {
        //ada movement
        output_low(PIN_B3);
        set_delay();

      }
     else
     {
            output_high(PIN_B3);

     }

    }      }
```

Program for transmitter board

```
#include <16F84A.h>

#fuses  HS,NOWDT,NOPROTECT
#use delay(clock=20000000)



void main()
{

   set_tris_a(0x00);
   set_tris_b(0x00);

   while(1)
   {
    output_low(PIN_B0);//0
    output_low(PIN_B1);//0
    output_low(PIN_B2);//0
    output_low(PIN_B3);//0

    if(input(PIN_A0)==0)  //0 = low ; 1=high
    {
    output_low(PIN_B3);
    }
    else
    {
    output_high(PIN_B3);
    } }
    delay_ms(100);
    output_high(PIN_B0);//1
    output_low(PIN_B1);//0
    output_low(PIN_B2);//0
    output_low(PIN_B3);//0

    if(input(PIN_A0)==0)  //0 = low ; 1=high
    {
    output_low(PIN_B4);
    }
    else
    {
    output_high(PIN_B4);
    }}
     delay_ms(100);
    }}
```

Program for receiver board