EFFECT OF RADIUS OF FILLET ON SHEAR STRESS FOR CYLINDRICAL SHAFT

NORSYAZWANI BT BADILAH

Report submitted in partial fulfillment of the requirements
for the award of the degree of
Bachelor of Mechanical Engineering with Automotive Engineering

Faculty of Mechanical Engineering
UNIVERSITI MALAYSIA PAHANG

JULY 2012

UNIVERSITI MALAYSIA PAHANG

FACULTY OF MECHANICAL ENGINEERING

I certify that the project entitled "*Effect of Radius of Fillet on Shear Stress for Cylindrical Shaft*" is written by Norsyazwani bt Badilah. I have examined the final copy of this project and in our opinion; it is fully adequate in terms of scope and quality for the award of the degree of Bachelor of Engineering. I herewith recommend that it be accepted in partial fulfillment of the requirements for the degree of Bachelor of Mechanical Engineering.

Dr. Tuan Mohammad Yusoff Shah bin Tuan Ya

Examiner Signature

SUPERVISOR'S DECLARATION

I hereby declare that I have checked this project and in my opinion, this project is adequate in terms of scope and quality of this thesis is qualified for the award of the Bachelor of Mechanical Engineering.

Signature	: .....
Name of Supervisor	: PN. NORHAIDA BINTI AB. RAZAK
Position	: LECTURER OF MECHANICAL ENGINEERING
Date	:

STUDENT'S DECLARATION

I hereby declare that the work in this thesis is my own except for quotations and summaries which have been duly acknowledged. The thesis has not been accepted for any degree and is not concurrently submitted for award of other degree.

Signature : .....
Name : NORSYAZWANI BT BADILAH
ID Number : MH08073
Date :

Dedicated To My Dearest Family

ACKNOWLEDGEMENT

This work was carried out at the Faculty of Mechanical Engineering, UMP under the supervisor of Pn. Norhaida bt Abd Razak.

I wish to express our sincere appreciations and gratitude to my supervisor, Pn Norhaida bt Abd Razak for his guidance, encouragement, motivation and many insight and valuable discussion during the development of ideas in this thesis.

I want to thank my loving family for their unflinching moral support, motivation throughout my work, sacrifices and prayers for me.

I would also to thank all my friends especially to my course mates for their continuous support and help throughout my final year project period and making my time really enjoyable here in UMP.

My sincere thanks go to all my labmates and members of the staff of the Mechanical Engineering Department, UMP, who helped me in many ways and made my stay at UMP pleasant and unforgettable. Many special thanks go to member corrosion and fracture focus group for their excellent co-operation, inspirations and supports during this study.

Finally, I would want to dedicate this work to my loving housemate members.

ABSTRACT

This project presents an investigation effect of the radius of the fillet on shear stress for cylindrical shaft by using finite element analysis. The shaft has the tendency to fail due to the inappropriate design of fillet radius. Hence, the best models need to design. 18 models were constructed with different ratio two diameters shaft and radius of fillet in SOLIDWORK. These models imported into PATRAN software to analyze the models with different given of the value of torque. In order to simulate torque, MPC RBAR was employed on model. AISI 4130 was selected material for all models. The value for Young Modulus of Elasticity = 206GPa and the Poisson Ratio = 0.3 was used in this analysis. The stress concentration factor was determined to compare the simulation result and equation. As expected, result showed that increased the radius of fillet of shaft reduced the value of shear stress. The ratio of two diameters shaft 1.09 was the best design compared to others because all cases produced the lowest value of shear stress. The value of shear stress was increase when the torque given was increased.

ABSTRAK

Projek ini mempersembahkan mengenai kesan penyiasatan jejari kambi pada tegasan ricih untuk aci silinder dengan menggunakan analisis unsur terhingga. Aci mempunyai kecenderungan untuk gagal kerana reka bentuk yang tidak sesuai jejari kambi. Oleh yang demikian, model yang baik perlu di reka. 18 model telah dibina dengan nisbah yang berbeza dua diameter aci dan jejari kambi dalam SOLIDWORK. Kemudian, model-model yang diimport ke dalam perisian PATRAN penganalisis model dengan yang berlainan diberi nilai tork. Supaya dapat merangsangkan tork, MPC RBAR telah bekerja pada model. AISI 4130 telah dipilih bahan untuk model semua. Nilai Modulus Young = 206GPa Keanjalan dan Nisbah Poisson = 0.3 telah digunakan dalam analisis ini. Faktor tekanan kepekatan telah ditentukan untuk membandingkan hasil simulasi dan persamaan. Seperti yang dijangka, hasil menunjukkan bahawa meningkat jejari kambi aci mengurangkan nilai tegasan ricih. Nisbah dua diameter aci 1,09 adalah reka bentuk yang terbaik berbanding dengan yang lain kerana semua kes-kes yang menghasilkan nilai terendah tegasan ricih. Nilai tegasan ricih adalah meningkat apabila tork yang diberikan telah meningkat.

TABLE OF CONTENTS

CHAPTER 3 RESEARCH METHODOLOGY

CHAPTER 4 RESULTS AND DISCUSSION

CHAPTER 5 CONCLUSION AND RECOMMENDATIONS

LIST OF TABLES

LIST OF FIGURES

LIST OF SYMBOLS

τ	Shear stress
G	Modulus of rigidity
γ	Shearing strain
ρ	Shearing stress in the shaft varies linearly with the distance
c	Circle of radius
J	Polar moment of inertia
T	Torque
K	Stress concentration factor
τ_{max}	Maximum shear stress
r	Radius of fillet
D	The largest diameter of shaft
d	The smallest diameters of shaft

LIST OF ABBREVIATIONS

CAD	Computer-aided drafting
CAE	Computer-aided engineering
DOF	Degree-of-freedom
UMP	University Malaysia Pahang
FEA	Finite element analysis
FEM	Finite element method
SAE	Society of Automotive Engineers

LIST OF APPENDICES

CHAPTER 1

INTRODUCTION

1.1 BACKGROUND

A shaft is the component of a mechanical device that transmits rotational motion and power. It is integral to any mechanical system in which power is transmitted from a prime mover, such as an electric motor or an engine, to other rotating parts of the system. There are many examples of mechanical systems incorporating rotating elements that transmit power: gear-type speed reducers, belt or chain drives, conveyors, pumps, fans, agitators, household appliances, lawn maintenance equipment, and parts of a car, power tools, machines around an office or workplace and many types of automation equipment. Torsional , bending and normal forces occur during the working of the shaft (Heisler, H. 1999). The forces cause a combination of normal and shear stresses which applied cyclically on the shaft.

The stress concentrations can be determined in a shaft by various method : mathematical methods, photoelasticity, Finite Element Method and others. There are researcher determine stress by using finite element method such as Bayrakceken, H. (2007) analyzed fatigue failure of driveshaft and universal joint yoke by the finite element method and Taylor, D. et al. (2011) also use finite element method to study about two new methods for reducing the stress concentration features .

The geometry of a shoulder fillet has long been of interest to shaft designers and structural analysts. FEA was used to analyze additional fillet shaft geometries. Shouldered shafts with conical tapered sections tangent to a fillet radius were studied by Jallipalli. et al. (1997). Then the more general case of a shoulder with a tapered section that is not necessarily tangent to the fillet was study by Schmidt. et al. (2006).

In this project, the stress analysis of shaft was carried out by using finite element analysis. The different design of various steel shafts was created by using SOLIDWORK to determine the value of shear stress with variable torque. This study to prove that stress can be reduced through the use of a fillet.

1.2 PROBLEM STATEMENT

A shaft is the component of a mechanical device that transmits rotational motion and power, usually of circular cross section either solid or hollow. There are different designs of shaft which can classify fillets into two categories namely sharp and well rounded, when a change in diameter occurs in a shaft to create a shoulder against which to locate a machine element, a stress concentration dependent on the ratio of the two diameters and on the radius in fillet is produced. Besides that, the shaft has the tendency to fail due to the inappropriate of fillet radius. Hence, there is need to construct model with the best design which is consider to the value of stress concentration, K so that the value shear stress will be decrease. Therefore, the main objective of this project is to examine stress analysis which to determine the shear stress for cylindrical shaft with various values of fillet by using FEA. The research work is focus on fillet in order to approve the stress can be reduced through the use fillet.

1.3 OBJECTIVE

The objective of this project:

a) To investigate effect of radius of fillet on shear stress for cylindrical shaft with various values of fillet by using finite element analysis.
b) To compare shear stress the value of shearing stress with the different the ratio of the two diameters.

1.4 SCOPE OF THE PROJECT

The scopes of this project as below are determined in order to achieve the objectives of the project:

a) Construct the model of cylindrical shaft with different of the ratio of the fillet to the diameter shaft and the ratio two diameters of shaft by using SOLIDWORK.
b) Determine the value of stress concentration, K
c) Analysis the shear stress with different model to prove that shear stress can be reduced through the fillet by using MSc PATRAN software.

CHAPTER 2

LITERATURE REVIEW

2.1 INTRODUCTION

This chapter will explain more about the information collected related study on effect radius of fillet on shear stress for cylindrical shaft and provide additional information and relevant fact. It cover are of interested subtopic such as torsion of shaft, stress concentration factor, *K*, application of shaft, finite element analysis, and material of shaft.

2.2 Torsion of shaft

Torsion occurs when any shaft is subjected to a torque. The torque makes the shaft twist and one end rotates relatives to the other inducing shear stress on any cross section.

2.2.1 Stress in the elastic range

From the Hooke's Law for shearing stress and strain.

$$\tau = G\gamma \tag{2.1}$$

Where G is the modulus of rigidity or shear modulus of the material. The shearing strain,γ at a distance ρ from the axis of the shaft as :

$$\gamma = \frac{\rho}{c}\ \gamma_{max} \qquad (2.2)$$

Multiplying Eq 2.2 by G,

$$G\gamma = \frac{\rho}{c}\ G\ \gamma_{max} \qquad (2.3)$$

$$\tau = \frac{\rho}{c}\ \tau_{max} \qquad (2.4)$$

The equation obtained shows that, as long as the yield strength is not exceed in any part of circular shaft, the shearing stress in the shaft varies linearly with the distance, ρ from the axis of the shaft.

The sum of the moments of the elementary force exerted on any cross section of the shaft must be equal to the magnitude T of the torque exerted on the shaft.(Ferdinand P.Beer. et al. 2009)

$$\int \rho\ \ (\tau\ dA) = T \qquad (2.5)$$

Substituting for τ from (2.4) in to (2.5) :

$$T = \int \rho\tau\ \ dA = \frac{\tau_{max}}{c} \int \rho^2\ \ dA \qquad (2.6)$$

Where J is polar moment inertia of circle of radius, c is

$$J = \frac{1}{2}\ \pi c^4 \qquad \text{(for solid shaft)} \qquad (2.7)$$

So, the elastic torsion formula as :

$$\tau_{max} = \frac{Tc}{J} \qquad (2.8)$$

Where ;

T = torque, (N.m)

c = circle of radius, (m)

J = polar moment of inertia, (m^4)

τ = shear stress, (N / m^2)

2.2.2 Stress concentration factor, *K*

In the case of shaft with a change in the diameter of its cross section, however, stress concentrations will occur near the discontinuity, with the highest stresses occurring at the fillet of shaft. These stresses may reduced through the use of fillet and the maximum value of the shearing stress at the fillet can be expressed as

$$\tau_{max} = K \frac{Tc}{J} \qquad (2.9)$$

The factor of *K* depends only upon the ratio of the two diameters and the ratio of the radius of the fillet to the diameter of the smaller shaft. The geometry of a shoulder fillet has long been of interested to shaft designers and structural analyst. For years engineers relied on solutions estimated by (Pilkey, W.D. et al. 2008) as presented in Figure 2.1 in the form of graphical design charts. Figure 2.1 was used to help determine the *K* value of a shoulder fillet on a cylindrical shaft in bending, torsion and tension.

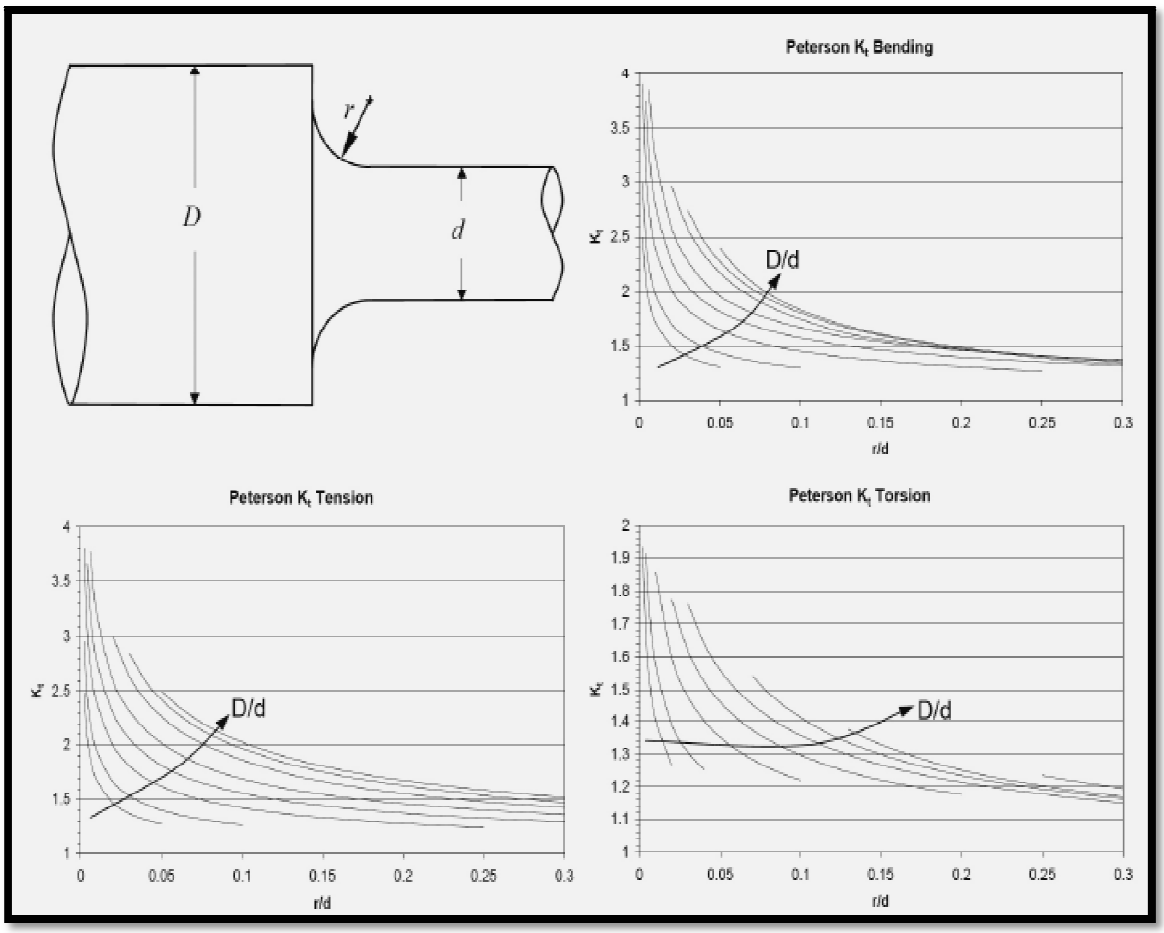

Figure 2.1 : Stepped shaft Geometry and Peterson original solutions for bending, tension and torsion

Sources : (Pilkey, W.D. et al. 2008)

Goksenli, A. et al. (2009) study about the failure analysis of an elevator drive shaft. This research found that the when the radius of curvature increase will reduce the shear stress. Figure 2.2 show the result of effect of radius of curvature on stress distribution.

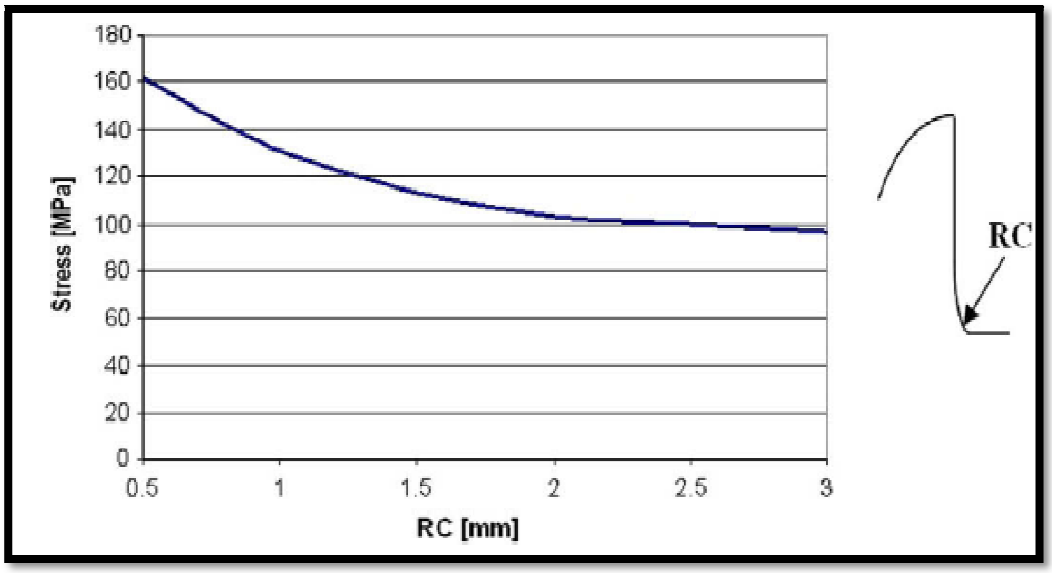

Figure 2.2 : Effect of RC on stress distribution

Source : Goksenli, A. et al. (2009)

2.3 APPLICATION OF SHAFT

There are many examples of mechanical systems incorporating rotating elements that transmit power: gear-type speed reducers, belt or chain drives, conveyors, pumps, fans, agitators, household appliances, lawn maintenance equipment, and parts of a car, power tools, machines around an office or workplace and many types of automation equipment

2.3.1 Drive Shaft

The torque that is produced from the engine and transmission must be transferred to the rear wheels to push the vehicle forward and reverse. The drive shaft must provide a smooth, uninterrupted flow of power to the axles. The driveshaft and differential are used to transfer this torque. Figure 2.3 showed the vehicle drive train which is showed the driveshaft is the connection between the transmission and the rear axle of the car.

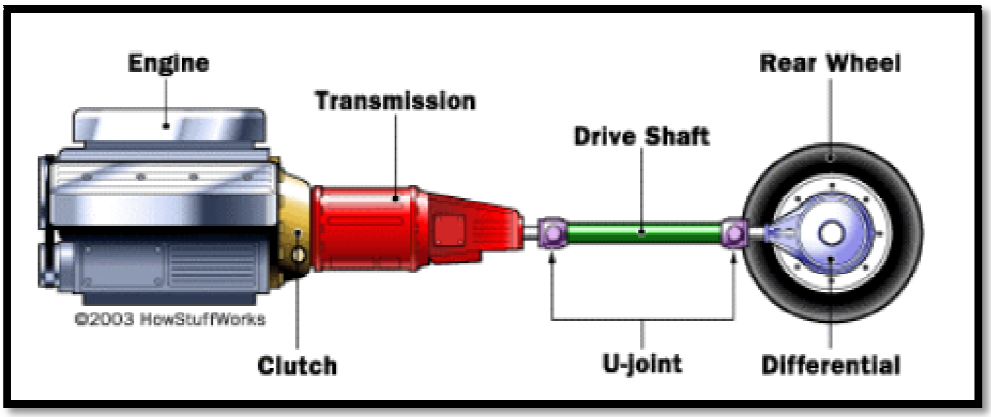

Figure 2.3 : Vehicle drive train

Source : Chad, K. et al. (2004)

2.3.2 Elevator Drive shaft

Goksenli, A. et al. (2009) study failure analysis of an elevator drive shaft. Elevator drive system is mounted at the bottom of building in Figure 2.4. Torque which is produced by an electric motor is transmitted by a worm gear to shaft. The shaft rotates the pulley by a key.

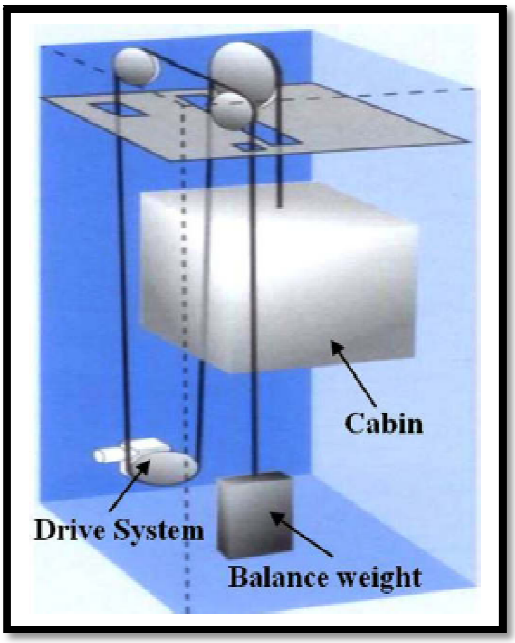

Figure 2.4 : Elevator system inside building

Source : Goksenli, A. et al. (2009)

Figure 2.5 showed the elevator drive system which is the shaft is supported in three points in form of journal bearings.

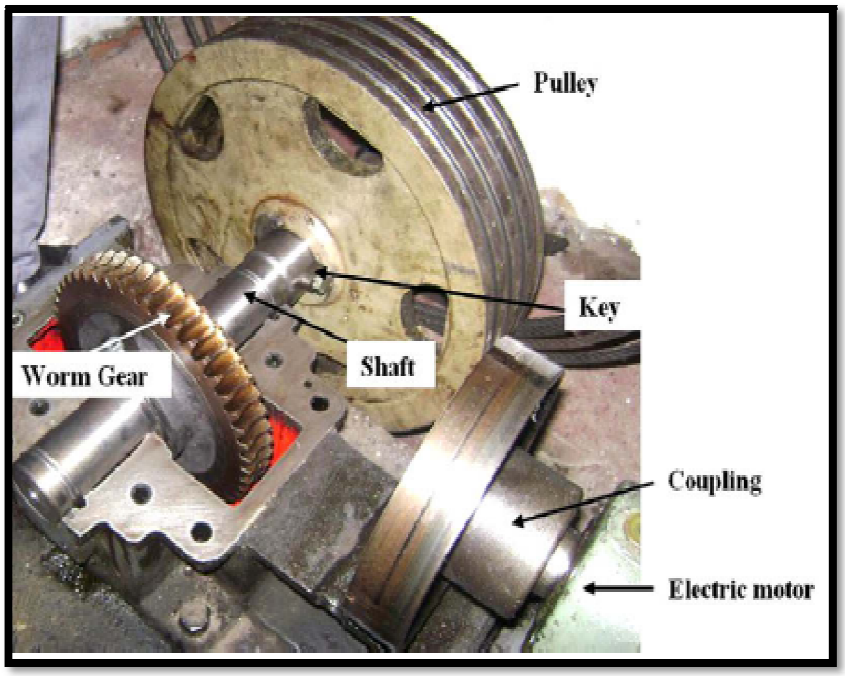

Figure 2.5 : Elevator drive system

Source : Goksenli, A. et al. (2009)

2.3.3 Turbine Engine Shaft

A turbine engine shaft transfer torque created by the engine's the turbine to the engine's compressor. In this process, the turbine shaft incurs rotational shear loads, bending loads, and a thermal gradient. Figure 2.6 shows the turbine engine.

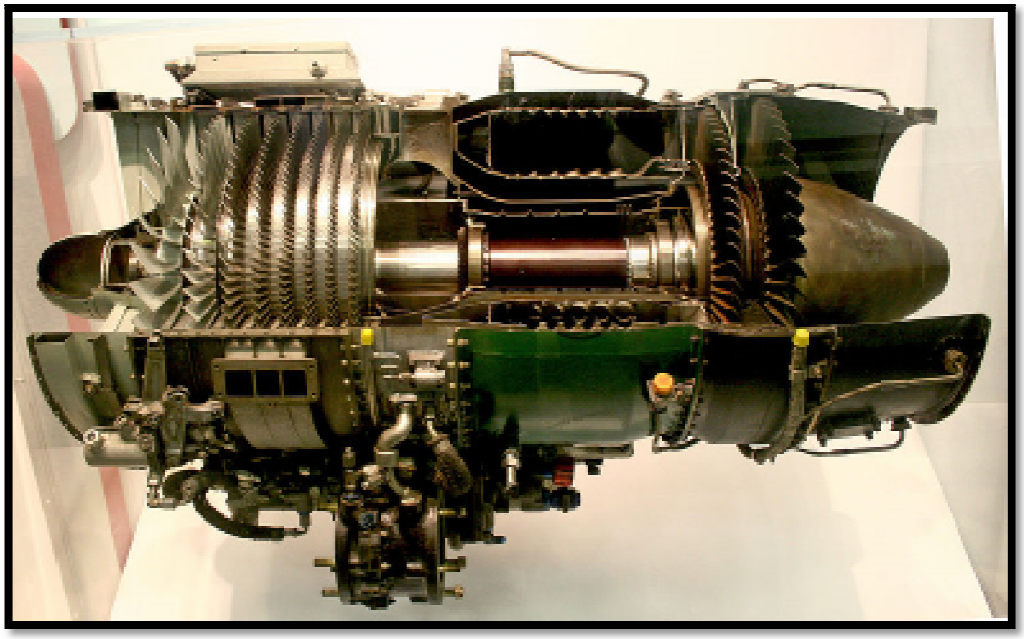

Figure 2.6 : A GE J85 turbine engine cut away so internal are visible. The shaft can be clearly seen.

Source : Steven Dallas Townes Jr. (2009)

2.4 FINITE ELEMENT ANALYSIS

Most recently, advance in technology have produced computers that are capable of quickly and efficiently running simulated analyses of geometrically complex components. The finite element method (FEM) has been established for many shaft as a means of analytically determining stresses but its usage has been somewhat limited by the processing power available. Goksenli, A. et al. (2009) showed that it was possible to accurately analyses an elevator drive shaft with the FE method. Their investigation was carried out with 3D model. A precise geometrical model of the shaft was built up and then imported to ANSYS to analyse the stress occurring at the keyway corner. Figure 2.7 shows the finite element mesh of the shaft.

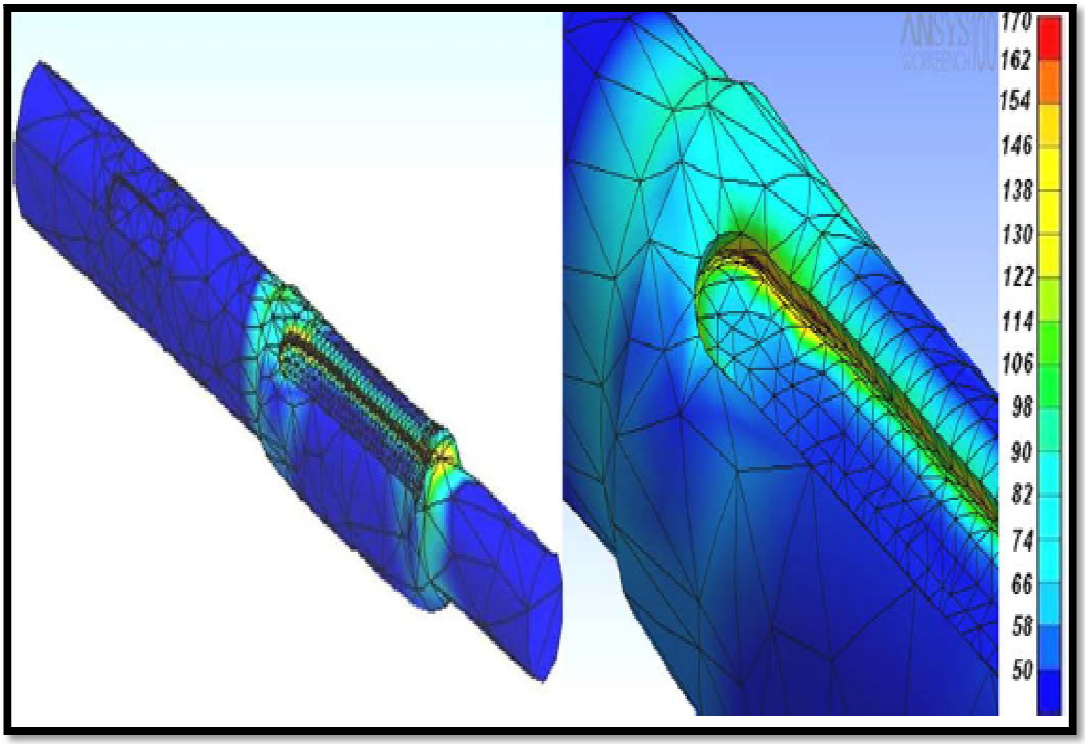

Figure 2.7 : Finite element mesh of the shaft

Source : Goksenli, A. et al. (2009)

Bayrakceken, H. (2007) research about two cases of failure in the power transmission system in vehicle. Finite element analysis technique is used to determine the stress distribution at the failed section and to obtain the best design. After the construction of the geometric model, a static stress analysis is carried out by entering the obtained mechanical properties of the material (Elastic Modulus = 205GPa, Poisson Ratio = 0.29). The load are lateral bending load of weight of the full car (2500N) and torsional moment for turning of the wheel 100N.m. The mesh consist of 11,486elements and 20,612 nodes. Boundary condition are applied at the bearing and geared coupling locations. Figure 2.8 show that the highest stress occur at the fillet region of the failed cross section.

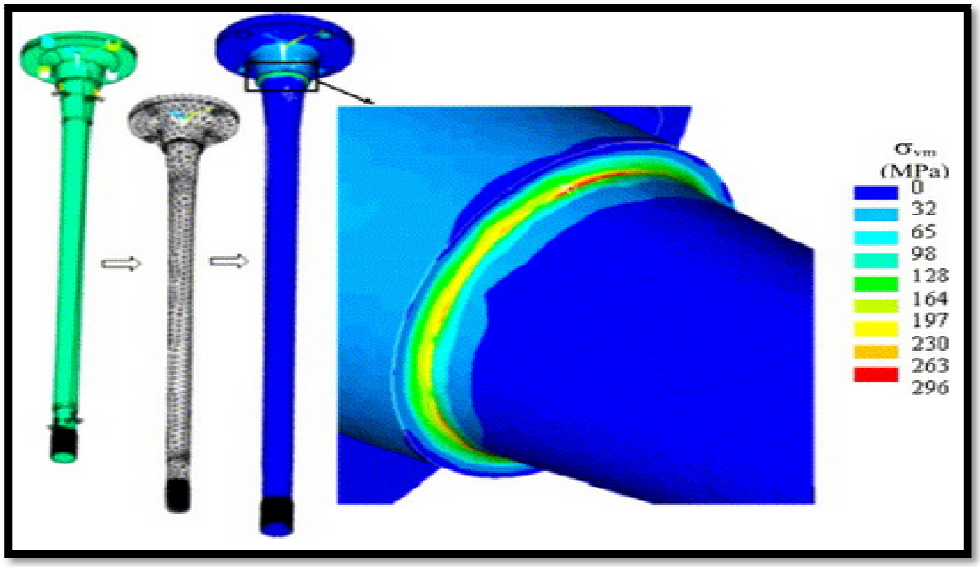

Figure 2.8 : Finite Element Model and results of the stress analysis

Source: Bayrakceken, H. (2007)

2.5 MATERIAL OF SHAFT

Gumadi, S. et al. (2007) use Steel (SM45C) as a material for automotive drive shaft applications. This material was chosen to design the steel shaft for the research study and also use the E-Glass/Epoxy, High strength Carbon Epoxy and High Modulus Carbon / Epoxy material selected for analysis design composite drive shaft. The material properties of the steel (SM45c) are given in Table 2.1. The Table 2.2 shows the properties of the E-Glass/Epoxy, High strength Carbon Epoxy and High Modulus Carbon / Epoxy. Bayrakceken, H. (2007) used a low alloy boron steel of the type 9430H as material for analysis drive shaft of automobile transmission.

Table 2.1 : Mechanical properties of steel (SM45C)

Mechanical Properties	**Steel**
Mass Density, ρ	7600 kg /m^3
Young Modulus of Elasticity, E	207Gpa
Shear Modulus, G	80Gpa
Poison's Ratio ,υ	0.3

Table 2.2 : Properties of E-Glass/Epoxy, High strength Carbon Epoxy and High Modulus Carbon / Epoxy

Mechanical Properties	**E-Glass/Epoxy**	**High strength Carbon Epoxy**	**High Modulus Carbon / Epoxy**
E_{11}	50GPa	134GPa	190GPa
E_{22}	12Gpa	7GPa	7.7GPa
G_{12}	5.6Gpa	5.8GPa	4.2Gpa
V_{12}	0.3	0.3	0.3
$S^t_2=S^c_2$	800Mpa	800Mpa	800Mpa
S_{12}	72MPa	97MPa	30MPa
ρ	2000Kg/m^3	1600Kg/m^3	1600Kg/m^3

CHAPTER 3

METHODOLOGY

3.1 INTRODUCTION

The research methodology of the project is divided into three main points each point focus n certain area so as to achieve the objective of the project as discuss earlier. Firstly, the value of stress concentration factor, *K* was determined which depend on the ratio of the two diameters and the ratio of the radius of the fillet. Secondly, the model of cylindrical shaft was designed in SOLIDWORK with different of the ratio of the two diameters and the ratio of the radius fillet. Then, FE stress analysis was performed by using MSc PATRAN-NASTRAN software. The material for the cylindrical shaft, boundary condition and loading was design for this analysis. Lastly, the data was recorded to plot graph shear stress versus radius of fillet with different torque. The step by step was shown in Figure 3.1 :

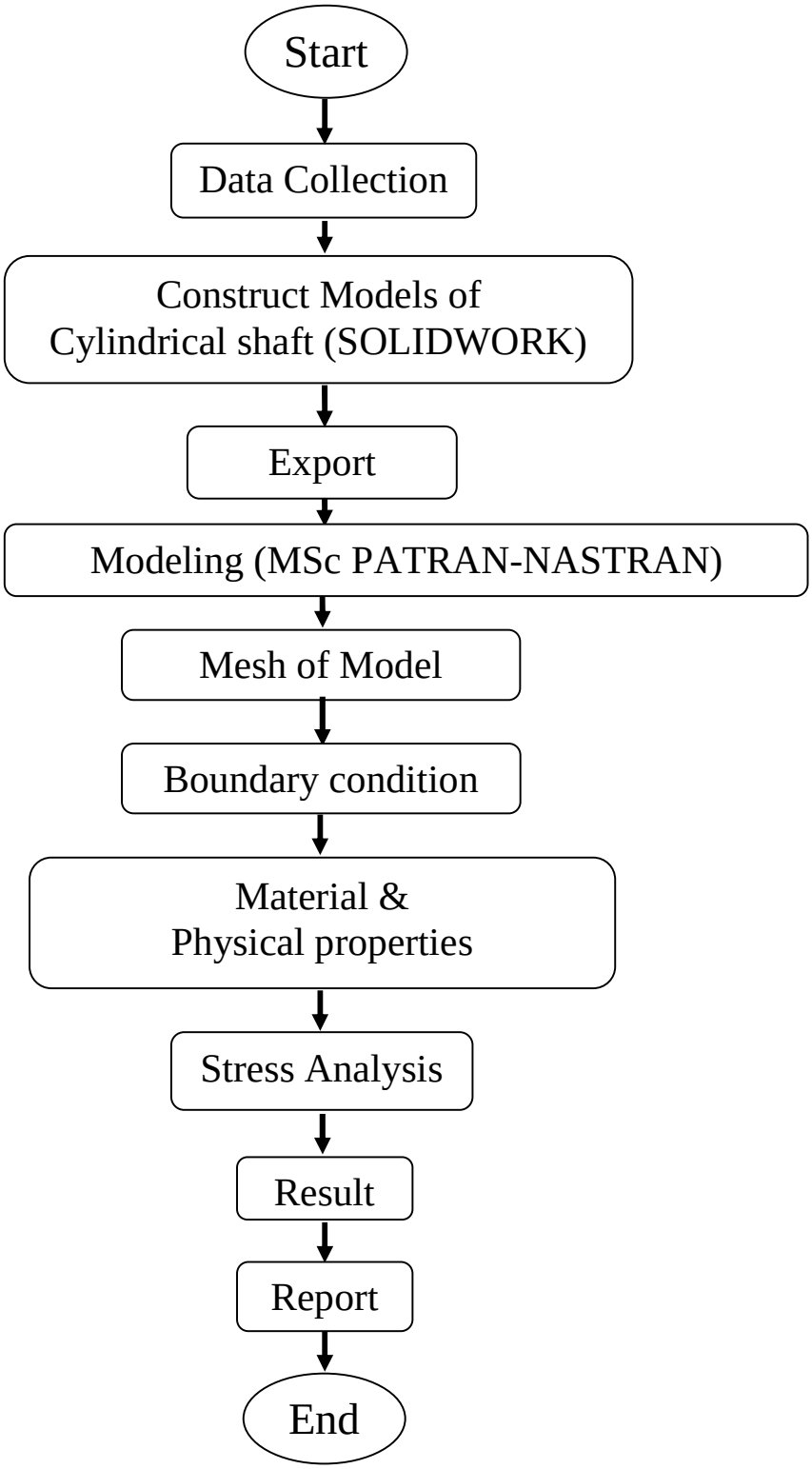

Figure 3.1: Flow chart for methodology

3.2 GEOMETRICAL MODELING

The model geometry of cylindrical shaft was constructed by using SOLIDWORK software. This software is more compatible to use in engineering application because it required tool to construct the model in engineering problem and very user friendly. In this project, 18 of simple cylindrical shaft with the different of the ratio of two diameters and the ratio of the radius of the fillet to the diameter of the smaller shaft was completed design. Firstly, the cross-sectional-area of the shaft was sketched according to the desired diameter of shaft. To create the fillet, selected the part and then clicked feature of fillet and fill the desired value of radius of fillet. Figure 3.2 shown one example of model that was completed design. Lastly the complete model was saved as a PARASOLID file.

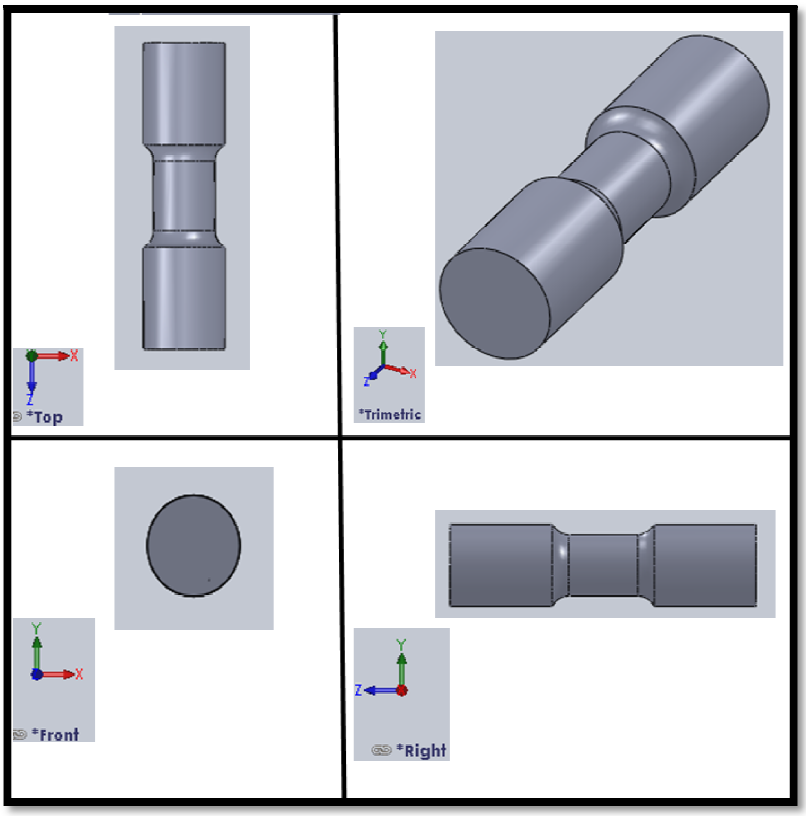

Figure 3.2: Example of one complete design of cylindrical shaft.

In this project, 18 different model have been created where there are 3 different value of D/d. Each D/d, there are 6 different value of radius. The Table 3.1 below has shown the three difference parameters values, D, d and r. The parameter value of D, d and r is known as:

D = large diameter shaft
d = small diameter shaft
r = radius of fillet of shaft

The value for r, radius of fillet were vary for different cases while the 3 values of D/d which are the ratio of two diameters are 32.7 / 30, 40 / 30, and 36 /30. Figure 3.3 showed that the value that was manipulated in this study.

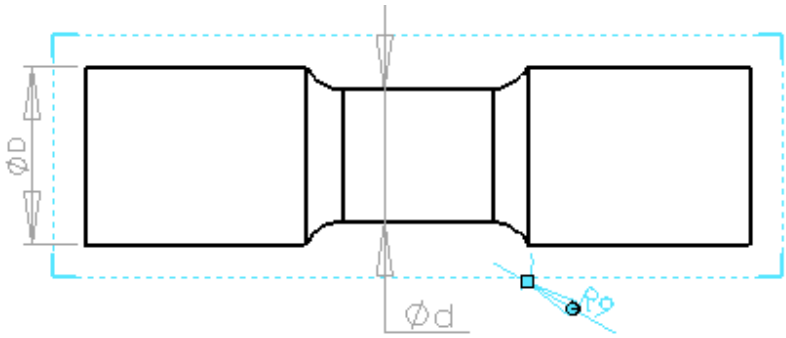

Figure 3.3 : Dimension value for D, d and r

Table 3.1 : The parameter value of shaft design

D / d = 32.7 /30	D / d = 40 /30	D / d = 36 /30
r (mm)	r (mm)	r (mm)
1.50	1.50	1.50
3.00	3.00	3.00
4.50	4.50	4.50
6.00	6.00	6.00
7.50	7.50	7.50
9.00	9.00	9.00

3.3 FEA ANALYSIS

All of the analyzed geometries, after being modeled in SOLIDWORK were exported in the PARASOLID format and brought into PATRAN software. Each case followed the same step except the variable value that need to change. Ensure that the geometry scale factor is millimeter before import the model. First of all, feature geometry was selected to apply cylindrical coordinate so that the origin is created on the shaft.

3.3.1 FEA MESH ANALYSIS

In this project, Finite element mesh for all models was created by using the TetMesh. In feature element, create, mesh, and solid was selected. Then, Tet, TetMesh and Tet10 was set to Elem Shape, Mesher and Topology. Next, TetMesh Parameters was selected to 0.01 as the value of ‘ Maximum h / L ’ which is for refinement option. Normally, Solid 1 was appeared when click the model to fill the column of input list. Button apply was clicked to complete meshing. In this project, automatic mesh is used for different cases to get fine mesh. Figure 3.4 shows that the step how to create the automatic mesh in all cases. Figure 3.5 shows that the example of result for completes mesh by using automatic mesh method.

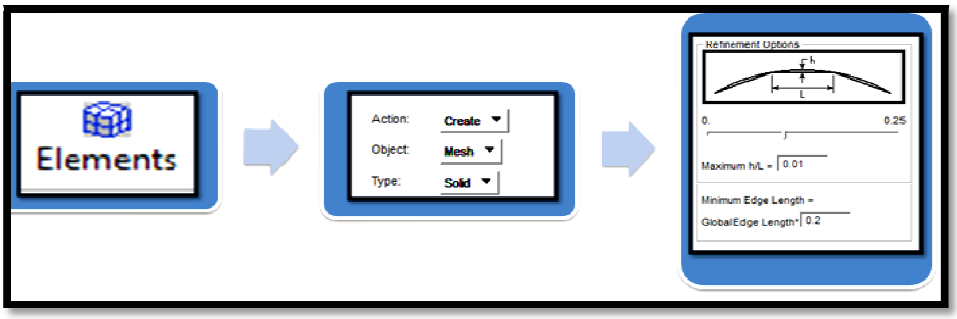

Figure 3.4 : Step how to create automatic mesh

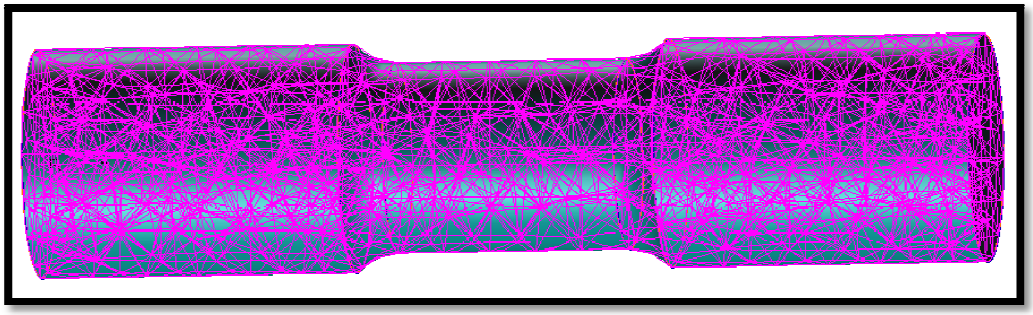

Figure 3.5 : Example of complete mesh model

3.3.2 BOUNDARY CONDITION

The idea was to model the shaft in FEA subjected to pure torsion, for this, one end was fixed with all the DOF arrested. On the other end the torque was applied as distributed forces in tangential direction to the outside of the fixture of the cylindrical shaft (Mutasher, S. A. 2009) . Node location list [0 0 160] is created when set Action as Create, Object as Node and Method as Edit. In order to simulate the torque, MPC RBAR need to be employed on this model. Figure 3.6 shows that the step how to create MPC RBAR. In order to apply the torque and fix on the shaft showed in Figure 3.7 and Figure 3.8. Figure 3.9 show shaft has attached with MPC.

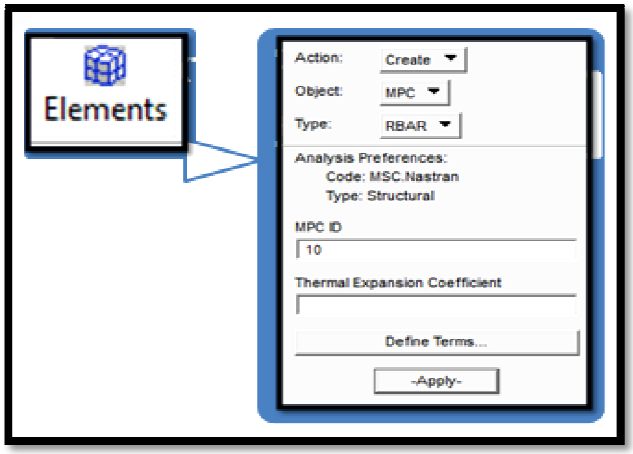

Figure 3.6 : Step how to create MPC RBAR

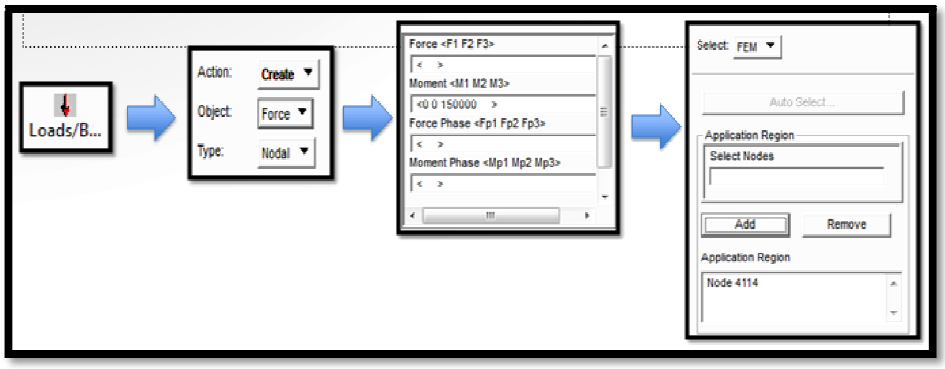

Figure 3.7 : Step to apply torque on shaft

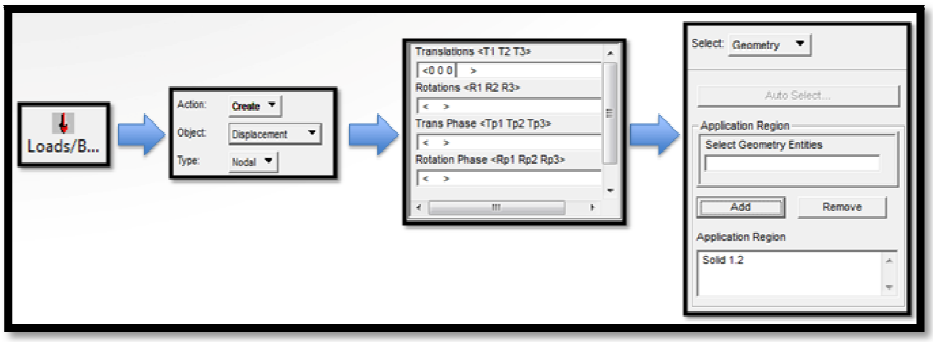

Figure 3.8 : Step how to fix on the shaft

In Loads feature, the tip which not attached the MPC is fixed when set Action as Create, Object as Displacement and Type as Nodal. Then set < 0 0 0 > for Translation column. The tip of shaft was fixed after click apply button. Torque applied when set Action as Create, Object as Force and Type as Nodal. Then set < 0 0 50000 > for moment column. The value of torque was appeared when press the apply button. The value of torque appeared is a variable value that needs to change such as 50Nm, 100Nm, 150Nm and 200Nm.Figure 3.9 shows example of result after applied the torque and fix on the shaft.

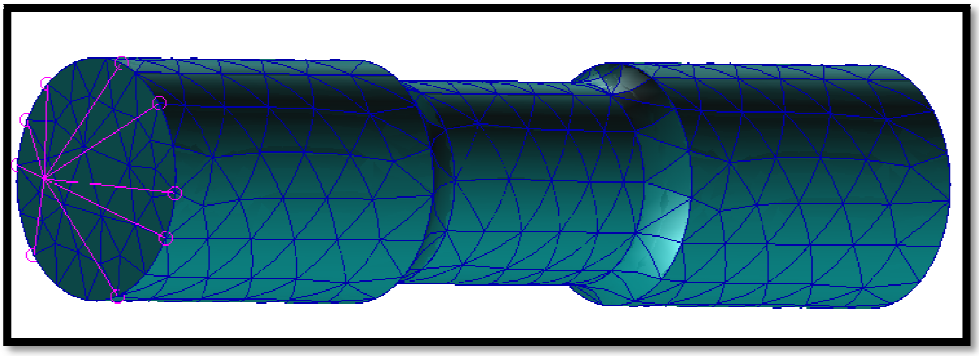

Figure 3.9 : Creating Nodal Moment and Creating Nodal Boundary Condition

3.3.3 MATERIAL PROPERTIES

AISI4130 was chosen for each analysis. The material that use in all cases were constant. Table 3.2 show material properties of steel AISI4130.

Table 3.2 : Material properties of steel AISI4130

Mechanical Properties	AISI 4130
Mass Density, ρ	7822.8 kg /m^3
Young Modulus of Elasticity, E	206.84Gpa
Shear Modulus, G	79.565Gpa
Poison's Ratio ,υ	0.3

In Analysis feature, set Action as Analyze, Object as Entire Model and Method as Analysis Deck and the button apply was clicked. This analysis was run in to NASTRAN. PATRAN software was reopened and Action was selected as Access Result. Lastly, the icon Result was selected to see the result of analysis.

CHAPTER 4

RESULT AND DISCUSSION

4.1 INTRODUCTION

In this chapter will focus on the shear stress analysis of cylindrical shaft that obtained from simulation. Hence, the result that obtained from simulation will compared with the theory. The study is carried out using the finite element analysis is (FEA) using MSc PATRAN software. There will be discussed about reduction of stress through fillet and comparative study between simulations and theoretical.

4.2 STRESS CONCENTRATION, *K*

The stress concentration factor, *K* depends only upon the ratio of the two diameters and the ratio of the radius fillet of the fillet to the diameter of the smaller shaft. The equation (4.1) is used to calculate the value of K . Since the values of K plotted in Figure 4.1were obtained under the assumption of a linear relation between shearing stress and shearing strain.

$$K_{t=} A \left(\frac{r}{d}\right)^{b} \tag{4.1}$$

Table 4.1 : The value of *K* is calculated by equation above with the different of ratio of the two diameters and the constant of the ratio of fillet to smaller diameter.

ØD(mm)	Ød(mm)	D / d	r (mm)	r / d	K
32.7	30	1.09	1.50	0.05	1.32
32.7	30	1.09	3.00	0.10	1.21
32.7	30	1.09	4.50	0.15	1.15
32.7	30	1.09	6.00	0.20	1.11
32.7	30	1.09	7.50	0.25	1.08
32.7	30	1.09	9.00	0.30	1.05
36	30	1.20	1.50	0.05	1.60
36	30	1.20	3.00	0.10	1.37
36	30	1.20	4.50	0.15	1.26
36	30	1.20	6.00	0.20	1.18
36	30	1.20	7.50	0.25	1.13
36	30	1.20	9.00	0.30	1.08
40	30	1.33	1.50	0.05	1.70
40	30	1.33	3.00	0.10	1.45
40	30	1.33	4.50	0.15	1.32
40	30	1.33	6.00	0.20	1.23
40	30	1.33	7.50	0.25	1.17
40	30	1.33	9.00	0.30	1.12

*r / d = ratio of fillet to smaller diameter
*D / d = ratio of the two diameters

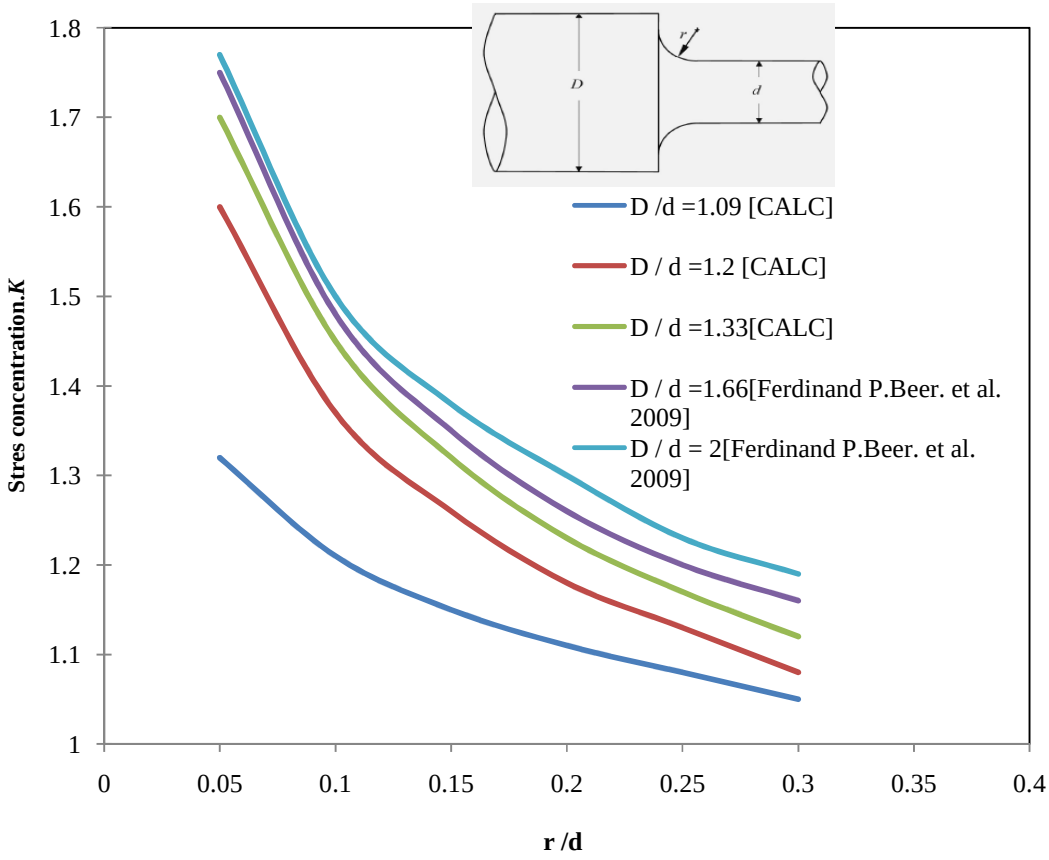

Figure 4.1: Stress concentration factors for fillet in circular shafts.

4.3 RESULT FOR D / d EQUAL TO 1.09

The Table 4.2 shows that the result of shear stress for D/d is equal 1.09. When 150N.m of torque is applied, the shear stress produced at r =1.5mm is 31.1MPa, r = 3mm is 30.5MPa, r = 4.5mm is 28.6MPa, r = 6mm is 25.9MPa, r = 7.5mm is 25.1MPa and r = 9mm is 23.2MPa. The decreasing value of shear stress from radius of fillet 1.5mm to 9mm is proven by the Equation (2.9).

From the figure 4.1 which is focus on D/d equal to 1.09, when the radius of fillet is increased, the ratio of radius of the fillet to the diameter of the smaller shaft, r/d is also increased and the stress concentration for this case will decrease. Therefore, the decreasing value of K will reduce the shear stress. The result for torque is equal to 150Nm and 1.5mm of radius of fillet from PATRAN shown in figure 4.2. The graph shear stress versus torque for this case is plotted in Figure 4.3.

Table 4.2 : Result of the shear stress for D /d is equal to 1.09

	Shear stress, τ (MPa)					
Torque (Nm)	**r=1.5 (mm)**	**r=3.0 (mm)**	**r=4.5 (mm)**	**r=6.0 (mm)**	**r=7.5 (mm)**	**r=9.0 (mm)**
0	0	0	0	0	0	0
50	10.4	10.2	9.54	8.62	8.38	7.74
100	20.7	20.3	19.1	17.2	16.8	15.5
150	31.1	30.5	28.6	25.9	25.1	23.2
200	41.4	40.7	38.2	34.5	33.5	31.0

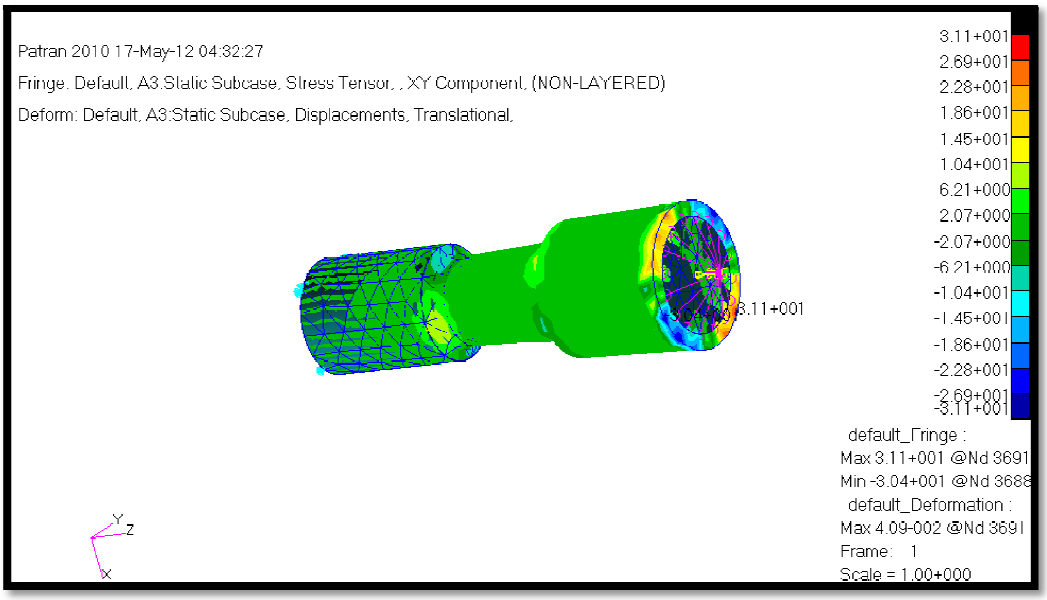

Figure 4.2 : Result of shear stress for Torque = 150N.m

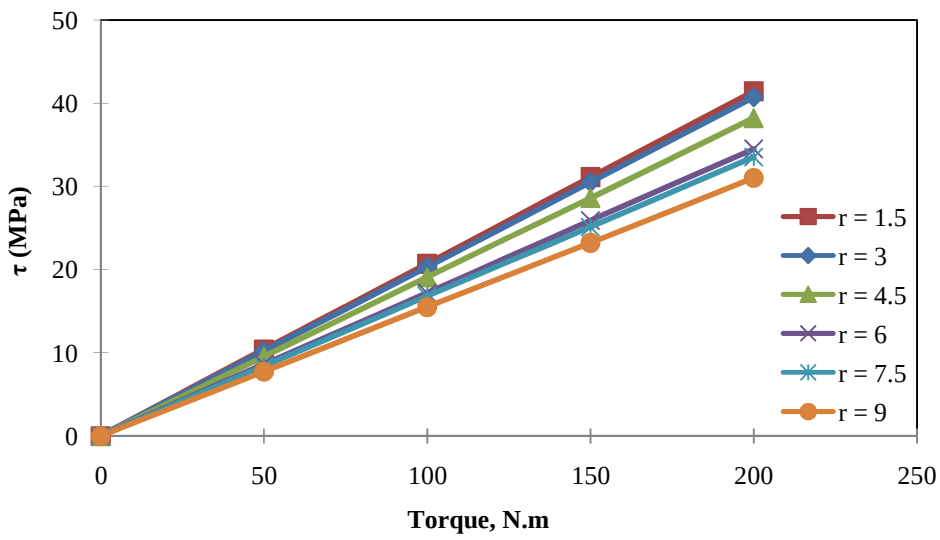

Figure 4.3 : Shear stress versus torque for D/d is equal to 1.09

Figure 4.4 show that the increasing value of torque is effected to the shear stress. From the equation 2.9 when the torque is decrease and radius of fillet increase, the shear stress become low.

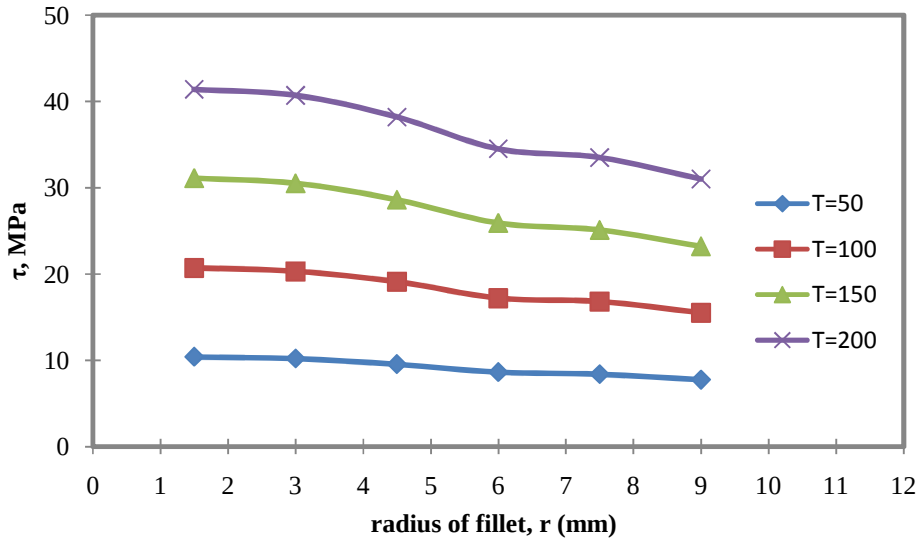

Figure 4.4 : Shear stress versus radius of fillet

4.4 RESULT FOR D / d EQUAL TO 1.2

The highest torque that applied on this model is 200Nm. The value of shear stress for r = 1.5mm is equal to 59.2MPa, r = 3mm is equal to 59.2MPa, r = 4.5mm is equal to 58.8MPa, r = 6mm is equal to 44MPa, r= 7.5mm is equal to 45.1, r = 9mm is equal to 43.1MPa. The value of shear stress from radius of fillet is equal to 1.5mm to 9mm is decreased with the same torque. This is due to the Equation 2.9, the value of K depends on the radius of fillet, when the *K* is decrease, and hence the shear stress also will decrease. The result of this case that obtained from FEA is plotted in Figure 4.6. The results that obtained shows the same trends with result for D/d = 1.09. All the other result from FEA will be attached into the appendices.

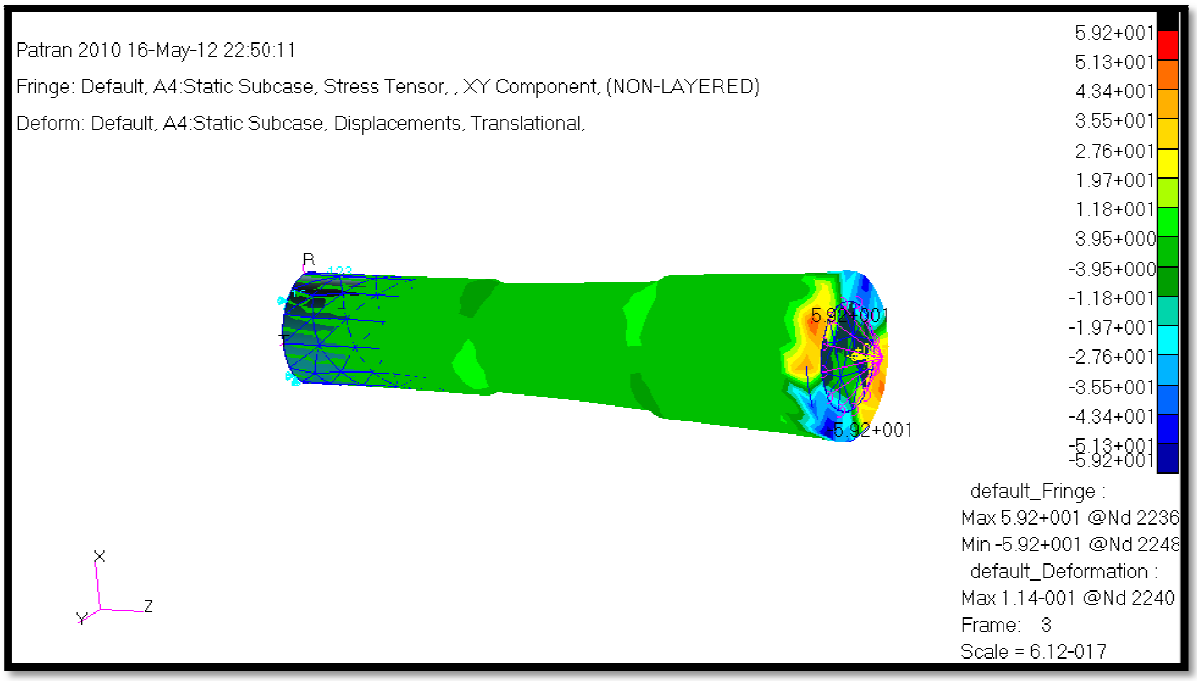

Figure 4.5 : Result of shear stress for Torque = 200N.m

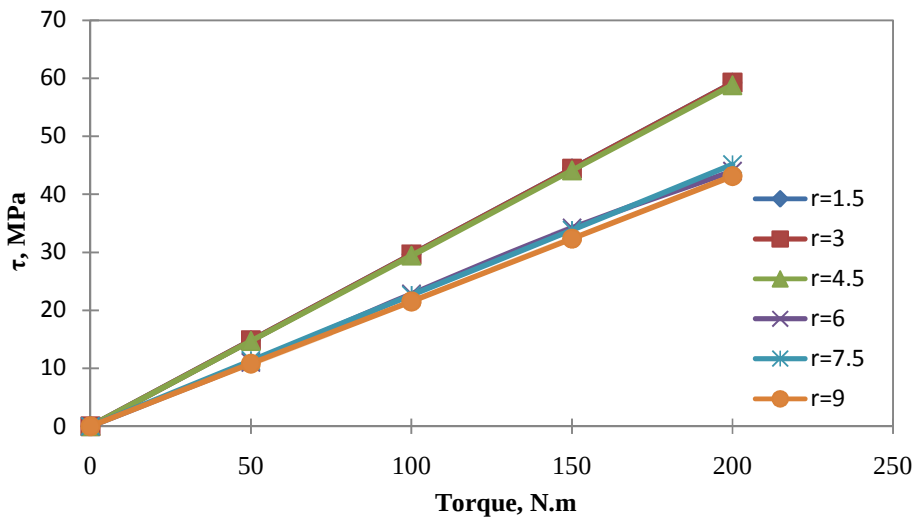

Figure 4.6 : Shear stress versus torque for D/d is equal to 1.2

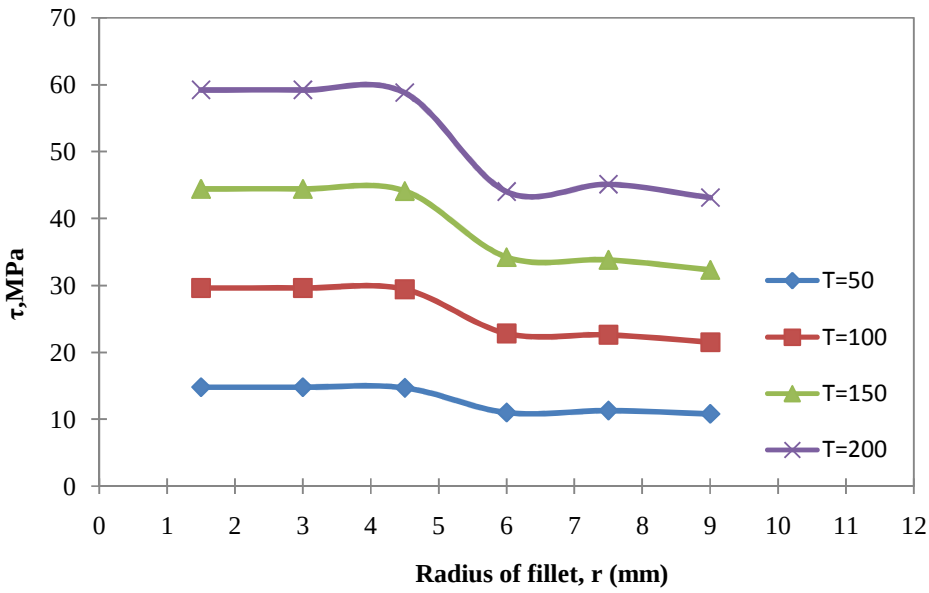

Figure 4.7 : Shear stress versus radius of fillet

By increasing the value of torque from 50 Nm to 200Nm would increase shear stress value from 14.9MPa to 59.2MPa for radius is equal to r = 1.5mm. Therefore, the value of torque is directly proportional to the shear stress.

4.5 RESULT FOR D / d EQUAL TO 1.33

The value of shear stress for r = 1.5mm is equal to 34.2MPa, r = 3mm is equal to 24.5MPa, r = 4.5mm is equal to 23.9MPa, r = 6mm is equal to 23.5MPa, r=7.5mm is equal to 23.4MPa and r = 9mm is equal to 23.1MPa when applied the lowest torque. At the same torque, the shear stress from radius of fillet, r at 1.5mm is decreased to the 9mm. This is due to the Equation (2.9), when decreasing the value of K which depends on the value of radius of fillet, hence the shear stress will reduce. The result of this case that obtained from FEA is plotted in Figure 4.9. The same situation occurred for the trendsof the result. The other result from FEA will be attached into the appendices.

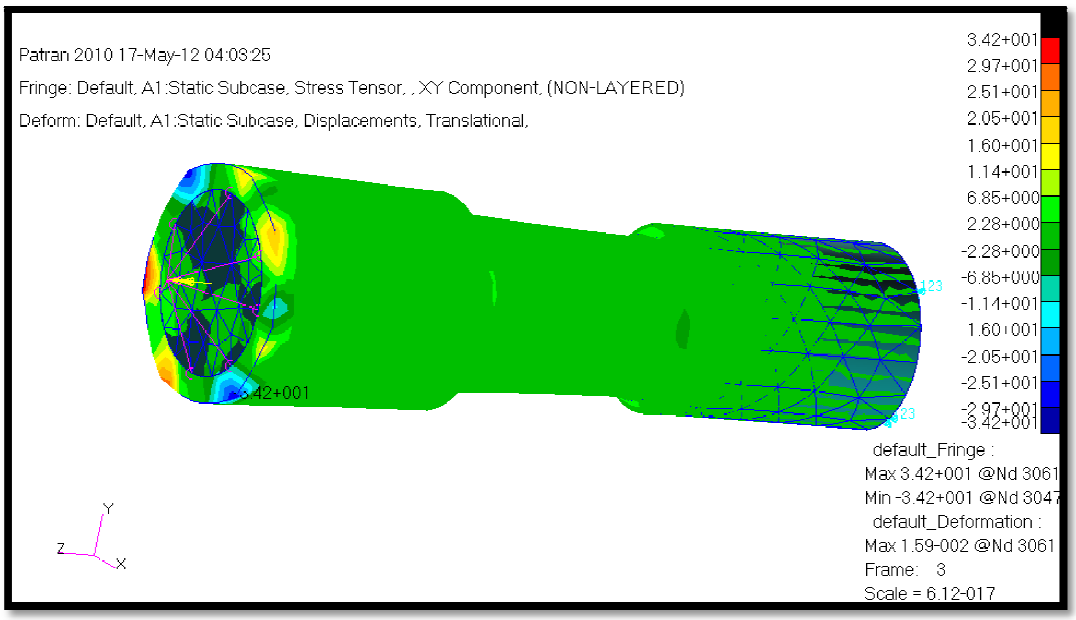

Figure 4.8 : Result of shear stress for the lowest torque,T = 50N.m

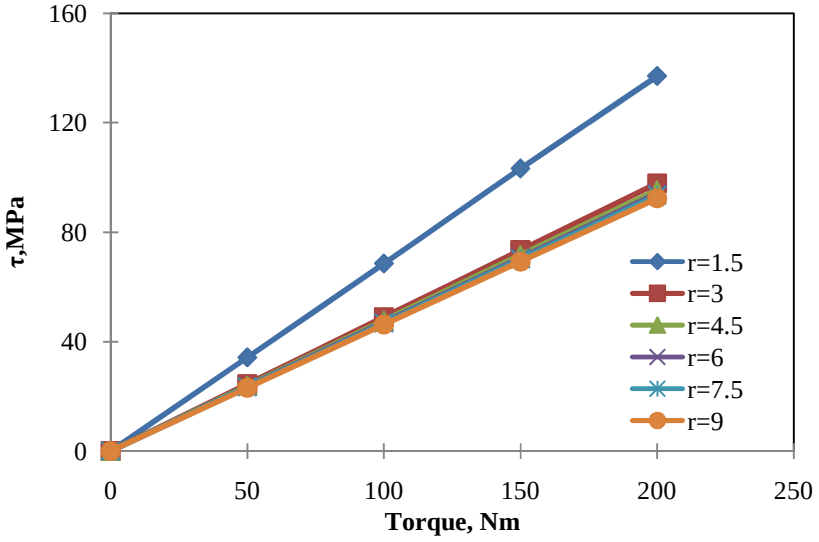

Figure 4.9 : Shear stress versus torque for D/d is equal to 1.33

Figure 4.10 show that the increasing value of torque is effected to the shear stress. From the Equation 2.9 when decreasing of torque and increasing the value of radius, the shear stress becomes low.

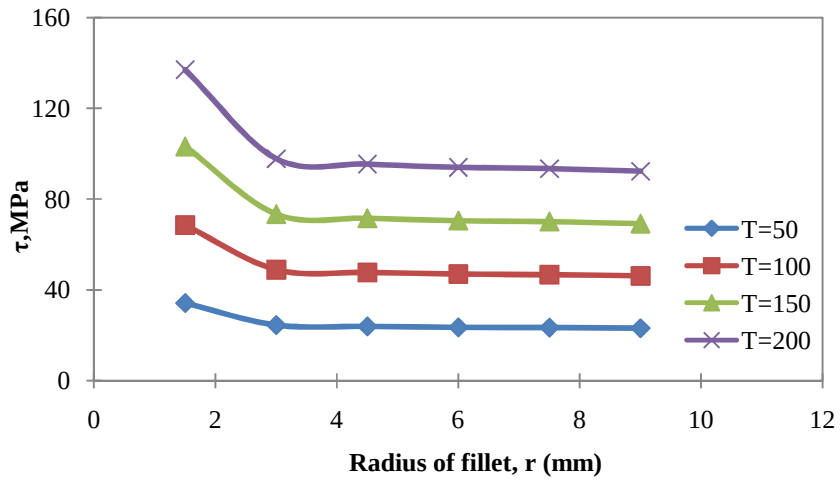

Figure 4.10 : Shear stress versus radius of fillet

4.6 COMPARISON RESULT FOR DIFFERENT OF THE RATIO OF TWO DIAMETER SHAFT

The graph in Figure 4.11 conclude that the ratio two diameters shaft of 1.09 has the lowest shear stress compare to the others and the shear stress will reduced as the radius of fillet increase. Therefore, the best design for radius of fillet is equal to 9mm because all different cases produced the lowest shear stress than the others.

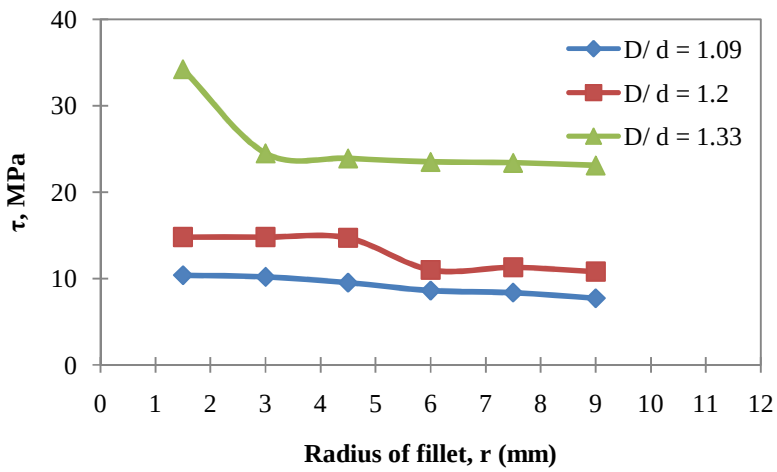

Figure 4.11 : Shear stress versus radius of fillet for torque is equal to 50N.m

Figure 4.12 shows the graph shear stress versus radius of fillet for torque is equal 200N.m. The graph shows the same pattern as 50N.m. This graph also proves that the best design for cylindrical shaft which has the ratio of two diameters shaft is equal to 1.09.

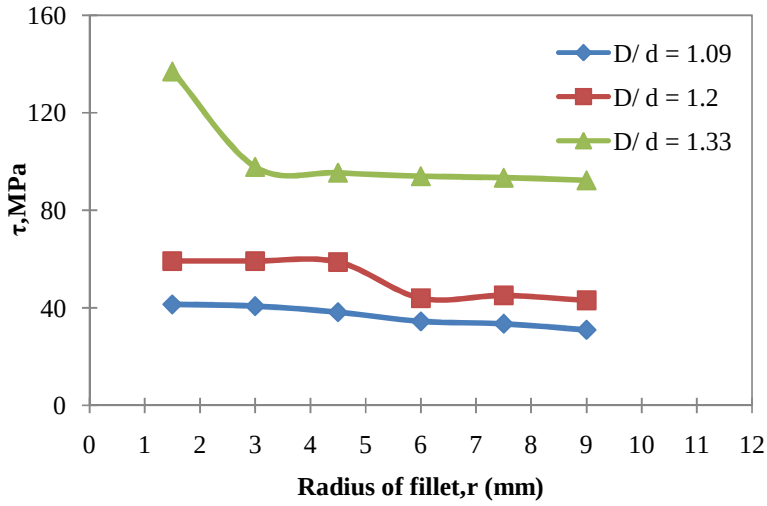

Figure 4.12 : Shear stress versus radius of fillet for torque is equal to 200N.m

Figure 4.13 shows the graph shear stress versus torque when radius of fillet is equal to 1.5mm. From this graph, the shear stress increase while the given torque is increased and the best design has the ratio of two diameters shaft is equal to 1.09 compare to the others at different torque.

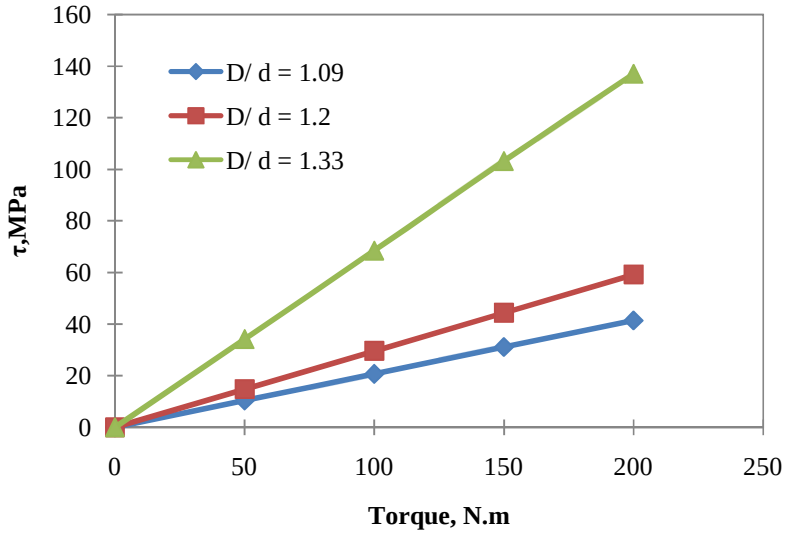

Figure 4.13 : Shear stress versus torque at r =1.5mm

Figure 4.14 shows the graph shear stress versus torque when radius of fillet is equal to 9mm. This graph has the same pattern with Figure 4.13. For all cases shows that when increase the value of torque, the shear stress also increase. The lowest shear stress will be produced the best design. Therefore, for this case is the ratio of two diameters shaft at 1.09 is the best design.

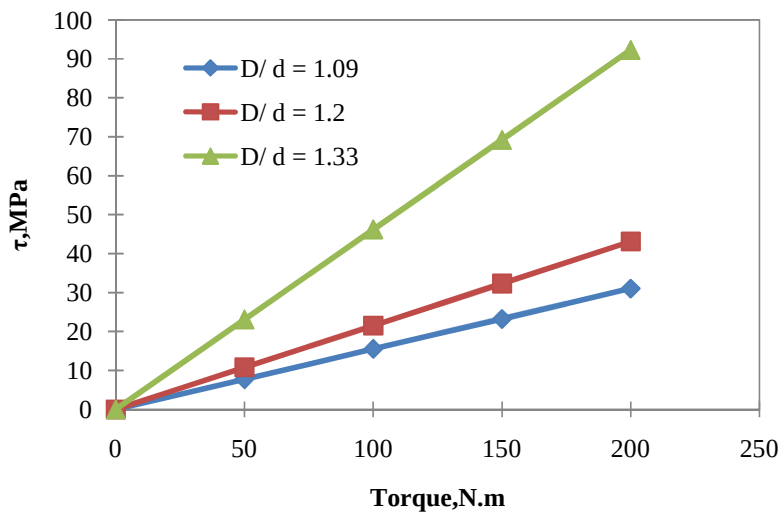

Figure 4.14 : Shear stress versus torque at r =9mm

CHAPTER 5

CONCLUSION AND RECOMMENDATION

5.1 CONCLUSION

The stress concentration factor under torsion is often encountered in the mechanical design of shaft. It also important for test specimen used to investigate effect of radius of fillet on cylindrical shaft. In this research, the result from FEA will compare to the equation (Pilkey, W.D. et al. 2008). The conclusion can be made as follows.

a) The value of shear stress will reduced by increasing the value of the radius of fillet. In this case, the radius of fillet is equal to 9mm produce the lowest shear stress compared to others.

b) Ratio of two diameters shaft, D/d with value of 1.09 is the best design compared to the others because it produced the lowest the value of shear stress.

c) The shear stress is directly proportional to the torque.

5.2 RECOMMENDATION

After all process done in completing the project, there have some recommendation that can be done for the future research. One of the recommendations that is need learn more about software or must advance in the software that will use for research study because it is become easy and take a short time to do analysis by using software.

The other recommendation is mesh of model need create more refine so the best result will come out in finite element analysis. Details study of some component of the system such as the shaft to include the radius of fillet should be taken into considered. Experimental work should be done to verify these simulation results.

REFERENCES

Bayrakceken, H., Tagestiren, S., and Yavuz, I. 2007. Two Cases of Failure in the Power Transmission System on Vehicles : A Universal Joint Yoke and A Drive Shaft. *Eng Fail Anal* **14**: 716-724

Chad,K., Wesley,K., Alex, S. 2004. Composite Drive Shaft. Thesis. The University of Tulsa.

Ferdinand P.beer, E.Russell Johnston Jr, John T De Wolf, David F.Mazurek. 2009. 5th Edition Mechanics of Material: Mc Graw Hill

Goksenli.A, I.B. Eryurek . 2009. Failure analysis of an elevator drive shaft . *Eng Fail Anal* **16** : 1011-1019

Gummadi, S. and Akula, J.K. 2007. Optimum Design and Analysis of a Composite Drive Shaft for an automobile. M.S. Thesis. Blekinge Institute of Tech, Sweden.

Heisler H. 1999.Vehicle and engine technology.2nd ed. London : SAE International

http://www.tribology-abc.com/sub18.htm

Jallipalli, Shreekanth. 1997. *Stress Concentration Factors forTapered Shaft Geometries*, M.S. Thesis, The University ofTulsa

Mutasher, S. A. (2009) "Prediction of the Torsional Strength of the Hybrid Aluminum/Composite Drive Shaft", Journal of Material and design Vol. **30**, 2, 215-220

Pilkey,W.D. and Pilkey, D.F., eds., 2008. *Peterson's Stress Concentration Factors*, 3*rd Ed.*, John Wiley & Sons

Schmidt, Curtis. 2006. The Effect of Tapering on Stress Concentration Factor for A Shoulder Fillet shaft. M.S Thesis. The University of Tulsa, Spring

Steven Dallas Townes Jr. 2009. An Analysis of Stress Concentration in Compound Fillet Produced During Dimensional Restoration Repair of Jet Engine Component. M.S. Thesis Rensselaer polythecnic Institute, Harfort CT.

Taylor, D., Kelly, A., Toso, M., and Susmel, L. 2011. The variable – Radius Notch : Two New Methods for Reducing Stress Concentration. *Eng Fail Anal* **18** : 1009 1017

APPENDIX A

RESULT FROM PATRAN ANALYSIS

Ratio of two diameters shaft, D / d = 1.09

Radius of fillet =1.5mm	
Torque = 50 N.m 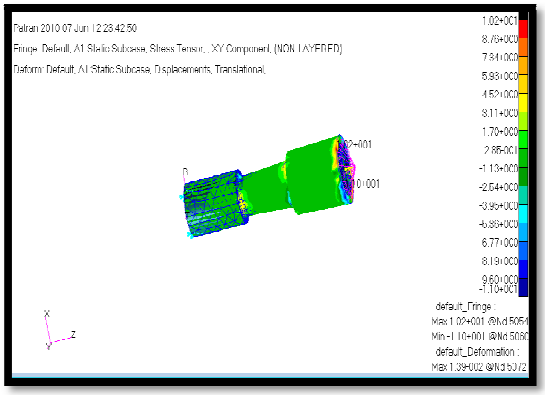	Torque = 100 N.m 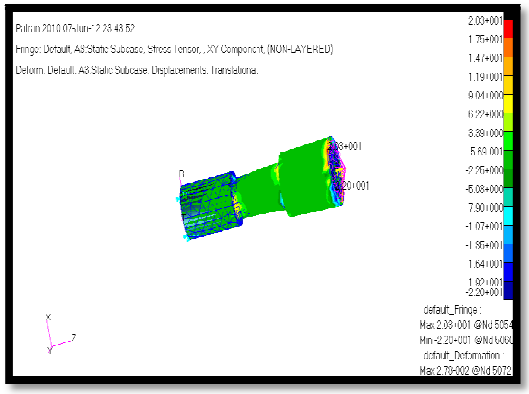
Torque = 150 N.m 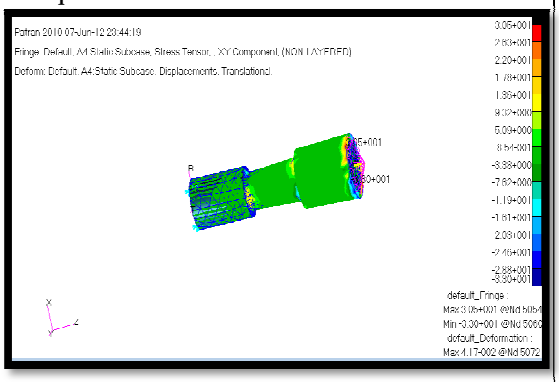	Torque = 200 N.m 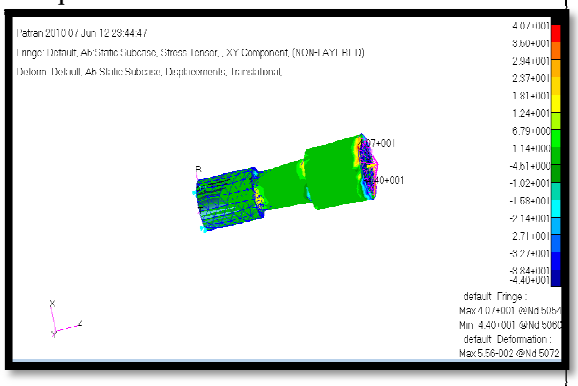

Ratio of two diameters shaft, D / d = 1.09

Radius of fillet =3mm	
Torque = 50 N.m 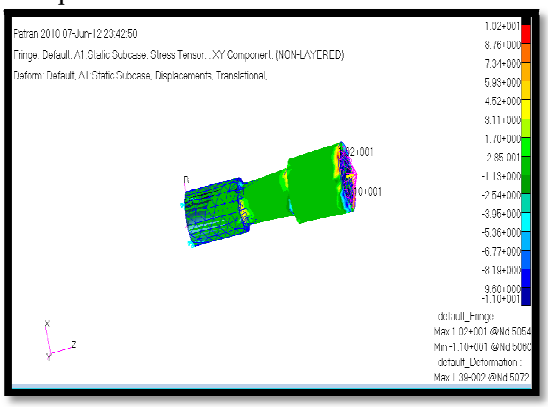	Torque = 100 N.m 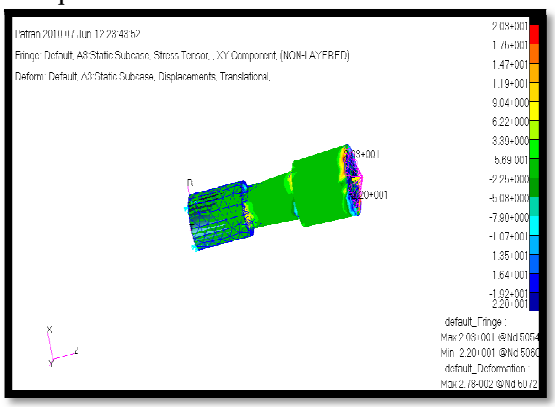
Torque = 150 N.m 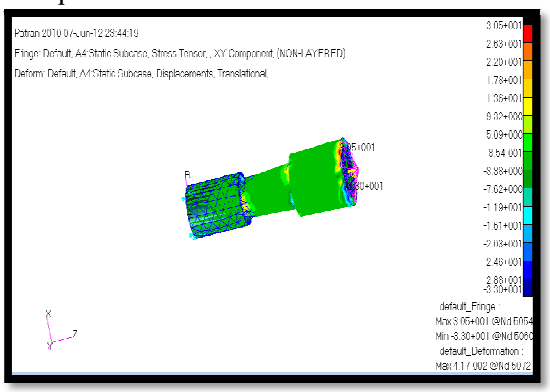	Torque = 200 N.m 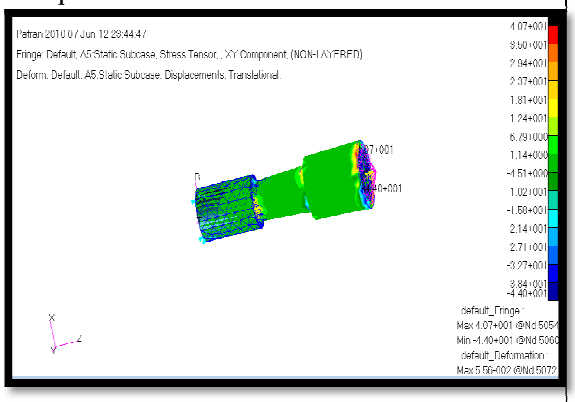

Ratio of two diameters shaft, D / d = 1.09

Radius of fillet =4.5mm	
Torque = 50 N.m 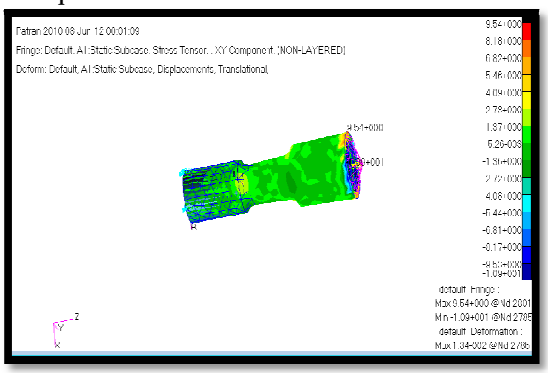	Torque = 100 N.m 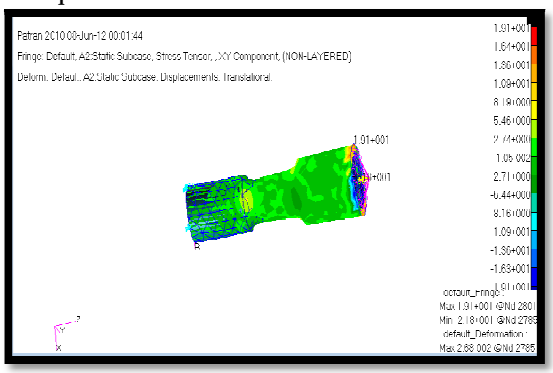
Torque = 150 N.m 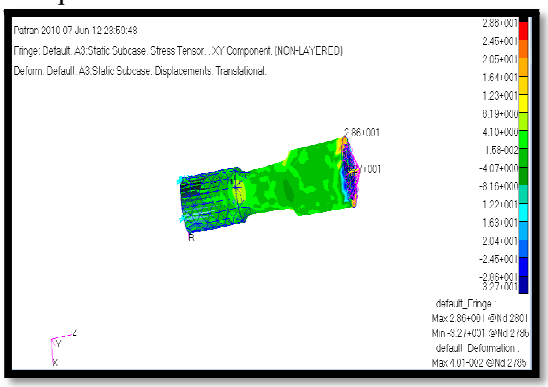	Torque = 200 N.m 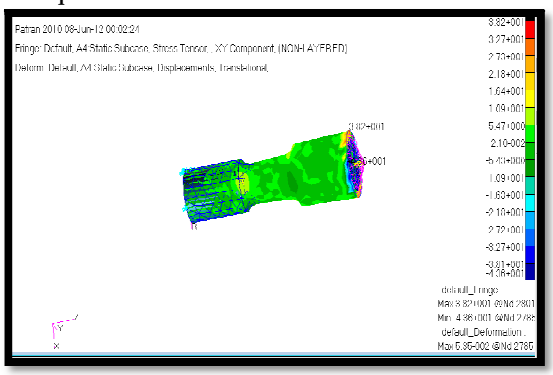

Ratio of two diameters shaft, D / d = 1.09

Radius of fillet =6mm	
Torque = 50 N.m 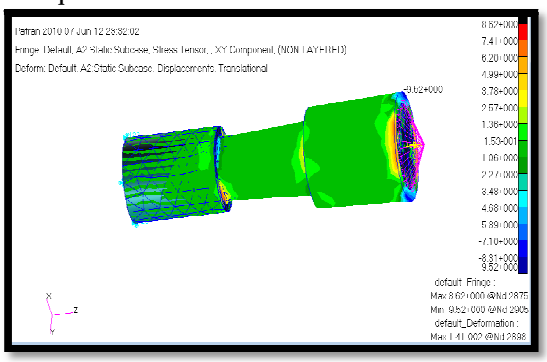	Torque = 100 N.m 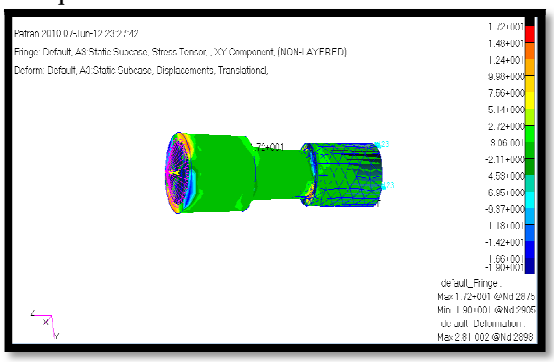
Torque = 150 N.m 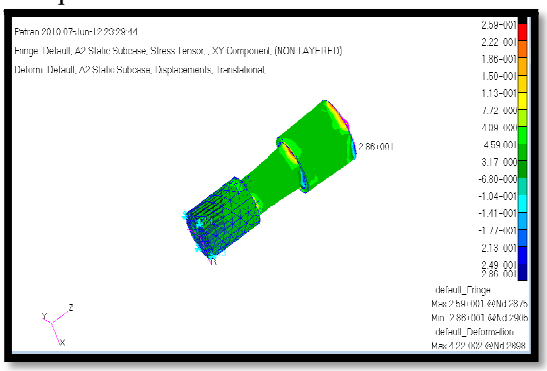	Torque = 200 N.m 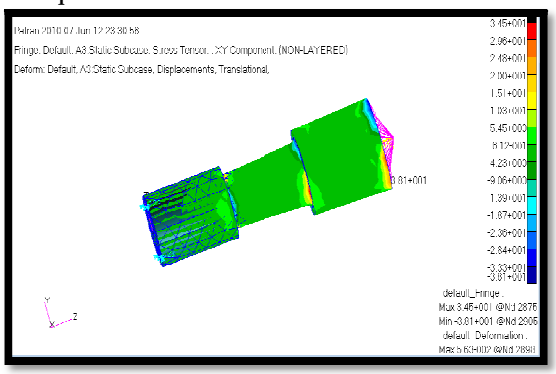

Ratio of two diameters shaft, D / d = 1.09

Radius of fillet =7.5mm	
Torque = 50 N.m 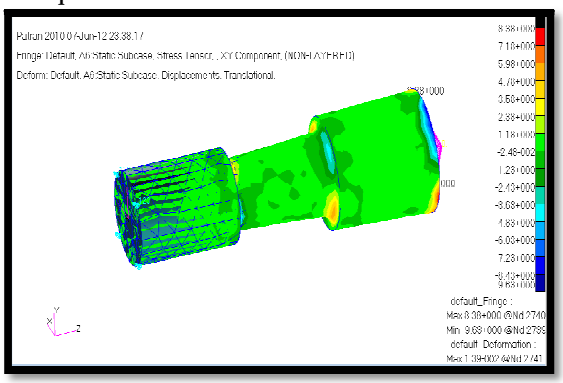	Torque = 100 N.m 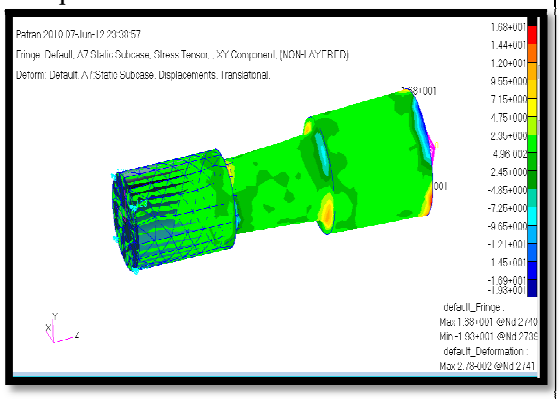
Torque = 150 N.m 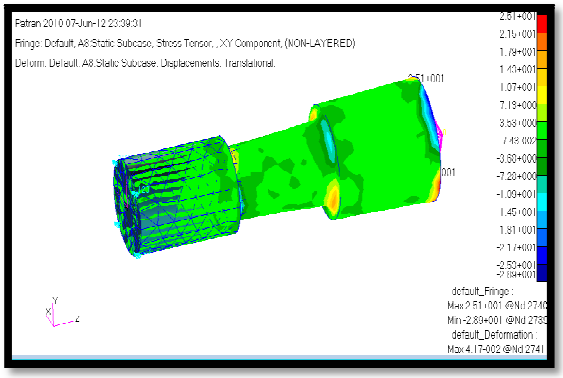	Torque = 200 N.m 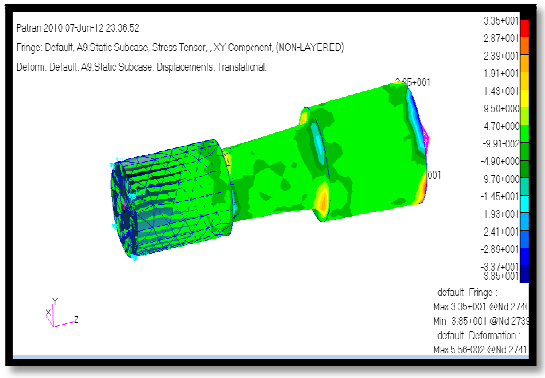

Ratio of two diameters shaft, D / d = 1.09

Radius of fillet =9mm	
Torque = 50 N.m 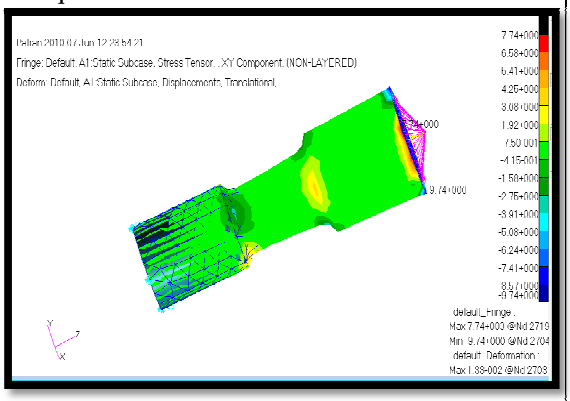	Torque = 100 N.m 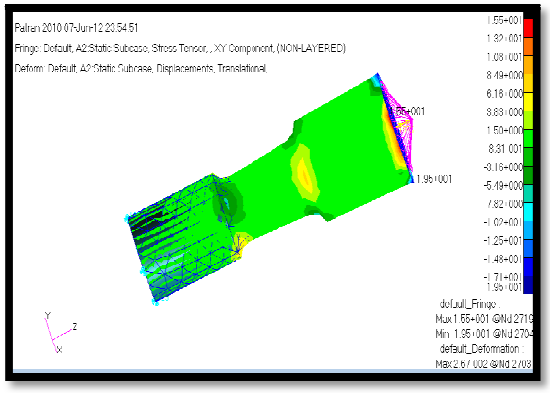
Torque = 150 N.m 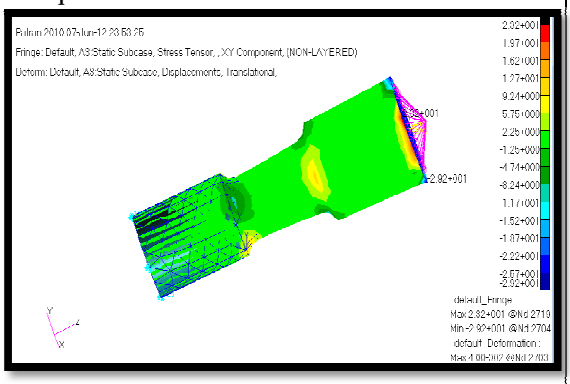	Torque = 200 N.m 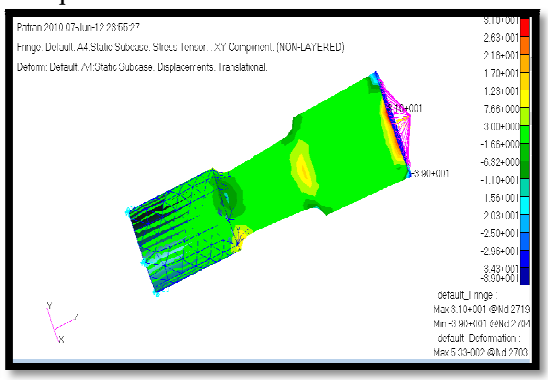

APPENDIX B

RESULT FROM PATRAN ANALYSIS

Ratio of two diameters shaft, D / d = 1.2

Radius of fillet =1.5mm	
Torque = 50 N.m 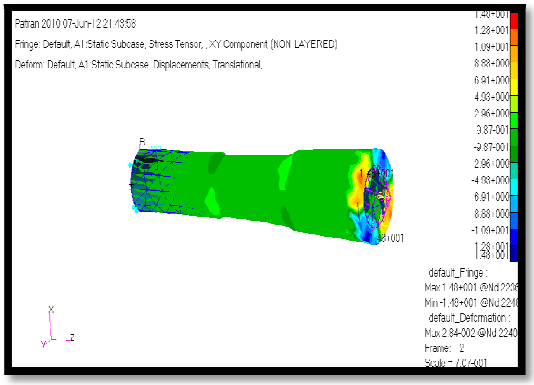	Torque = 100 N.m 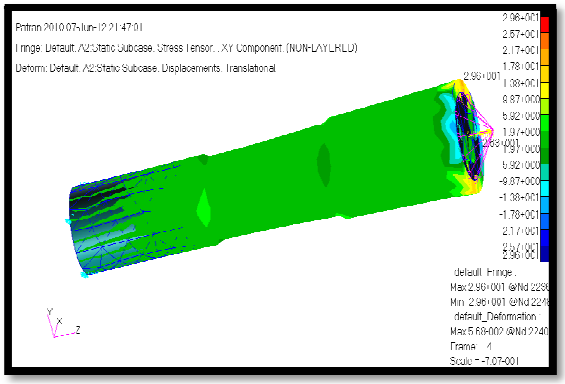
Torque = 150 N.m 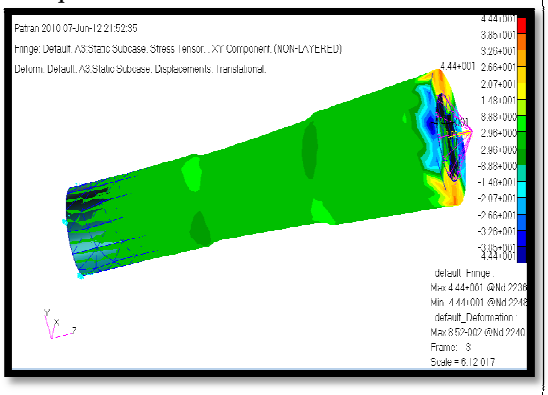	Torque = 200 N.m 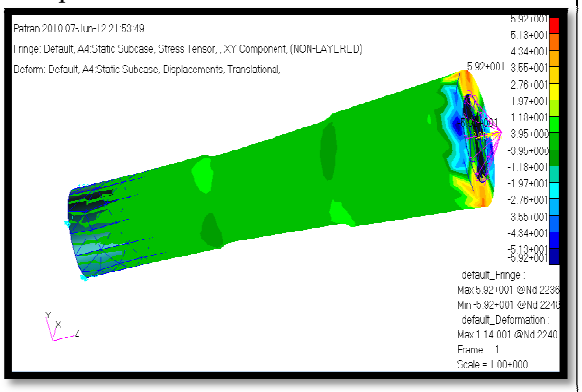

Ratio of two diameters shaft, D / d = 1.2

Radius of fillet =3mm	
Torque = 50 N.m 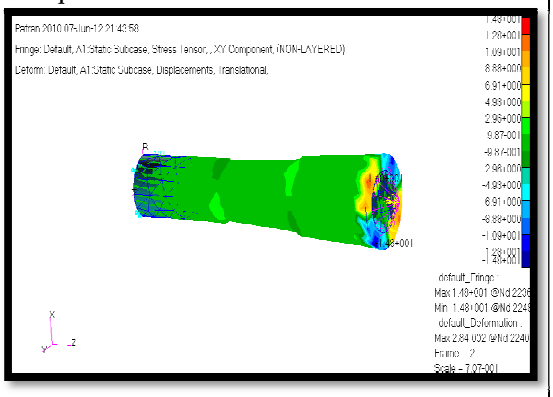	Torque = 100 N.m 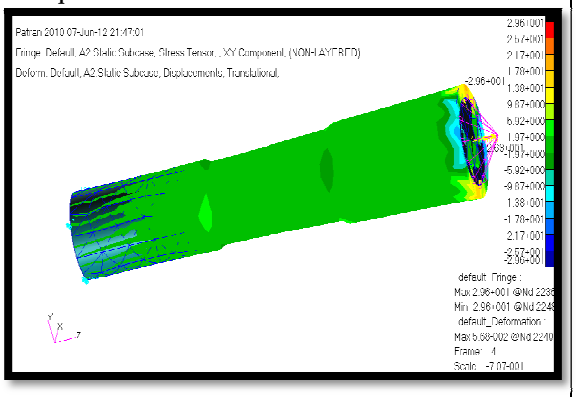
Torque = 150 N.m 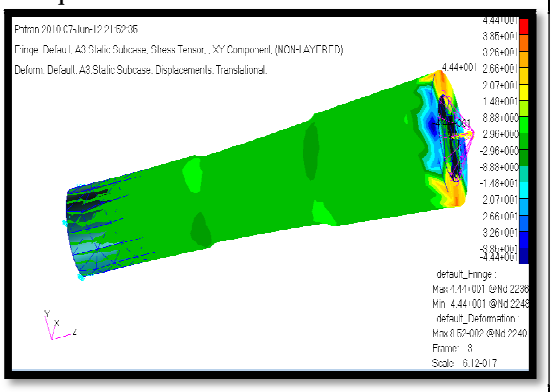	Torque = 200 N.m 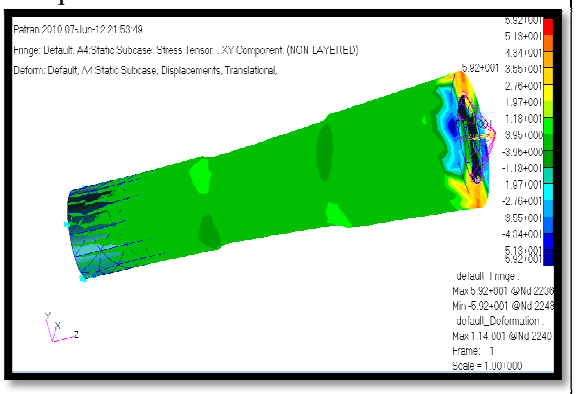

Ratio of two diameters shaft, D / d = 1.2

Radius of fillet =4.5mm	
Torque = 50 N.m 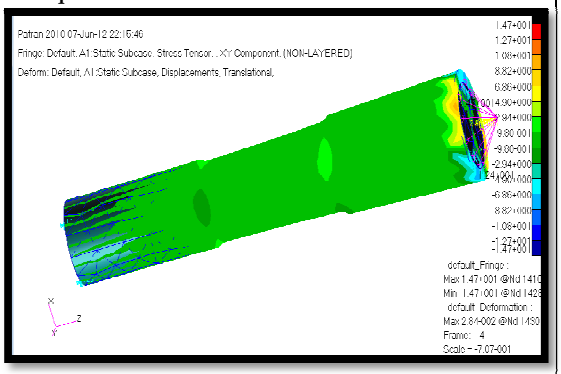	Torque = 100 N.m 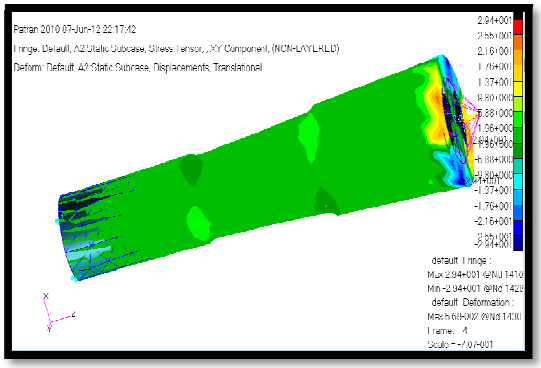
Torque = 150 N.m 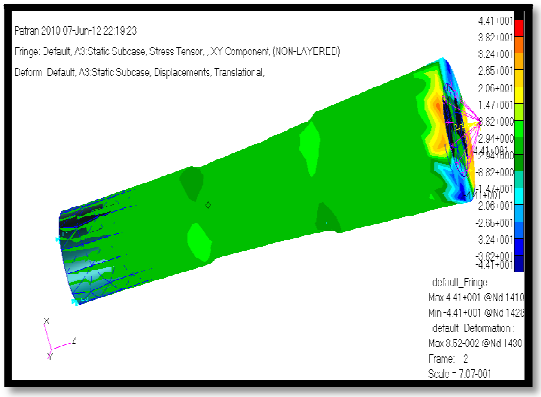	Torque = 200 N.m 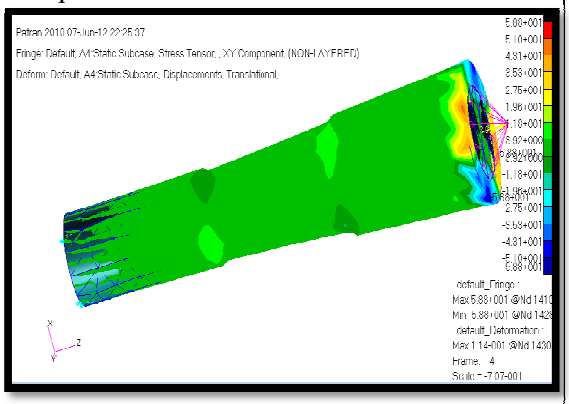

Ratio of two diameters shaft, D / d = 1.2

Radius of fillet =6mm	
Torque = 50 N.m 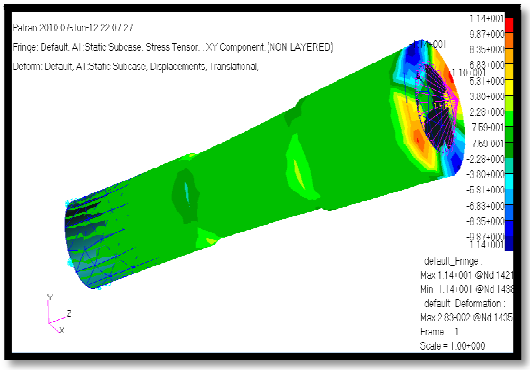	Torque = 100 N.m 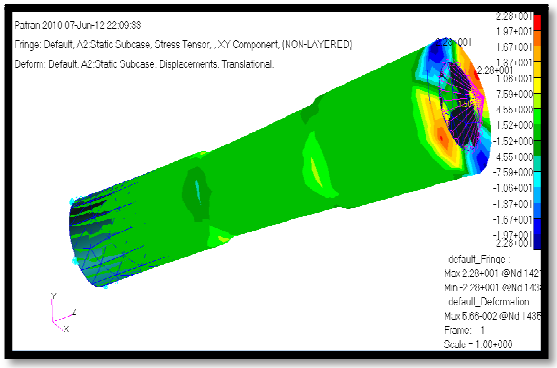
Torque = 150 N.m 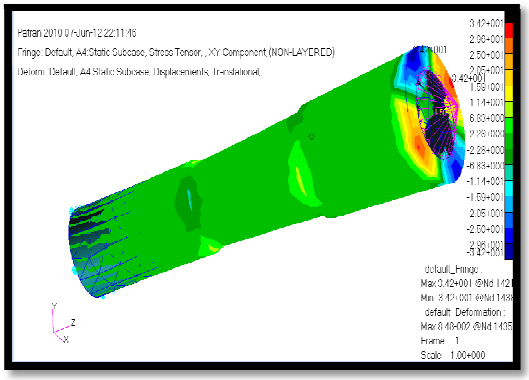	Torque = 200 N.m 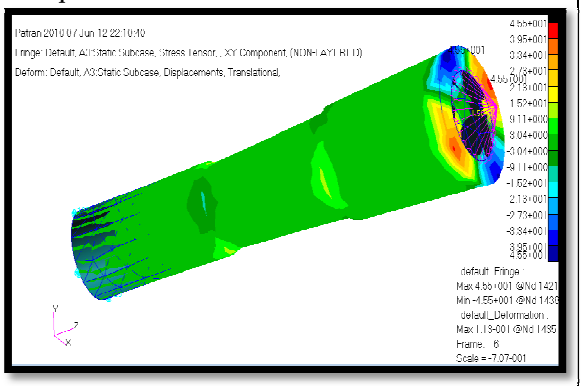

Ratio of two diameters shaft, D / d = 1.2

Radius of fillet =7.5mm	
Torque = 50 N.m 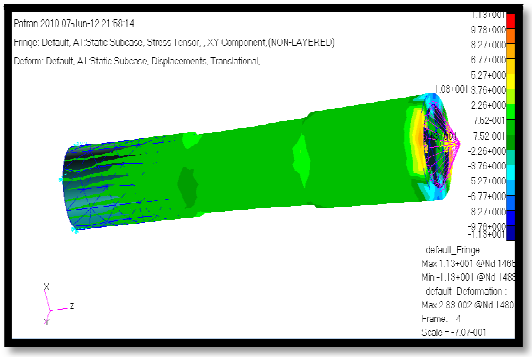	Torque = 100 N.m 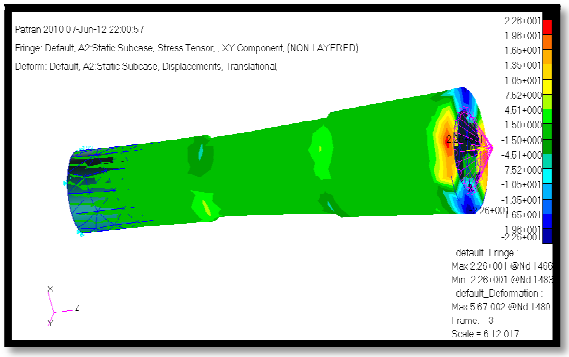
Torque = 150 N.m 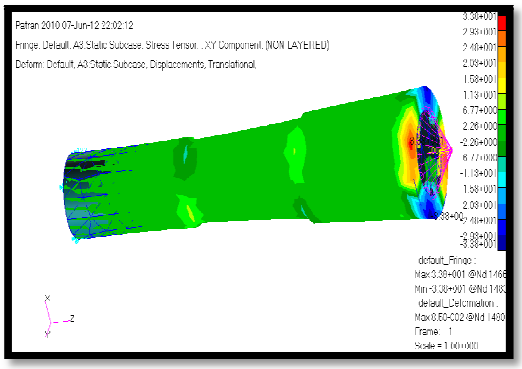	Torque = 200 N.m 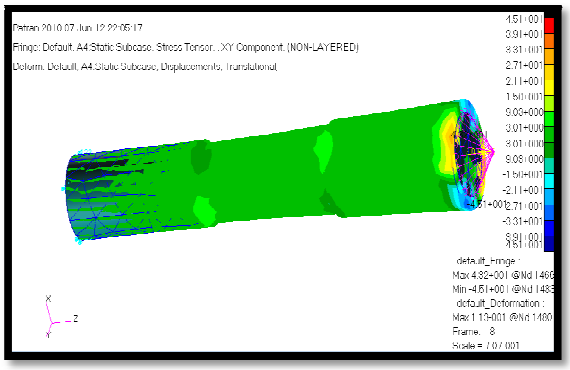

Ratio of two diameters shaft, D / d = 1.2

Radius of fillet =9mm	
Torque = 50 N.m 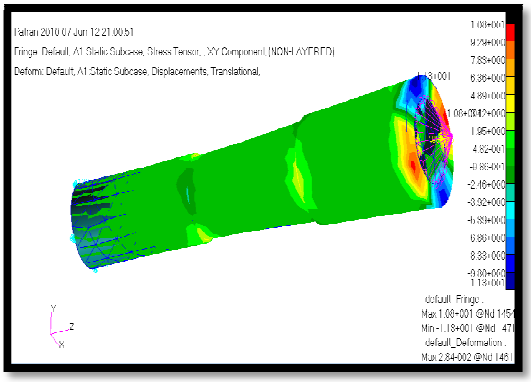	Torque = 100 N.m 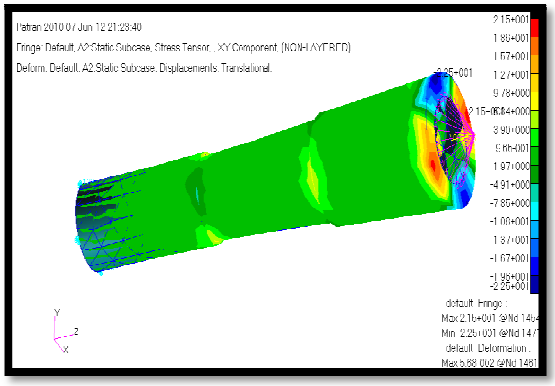
Torque = 150 N.m 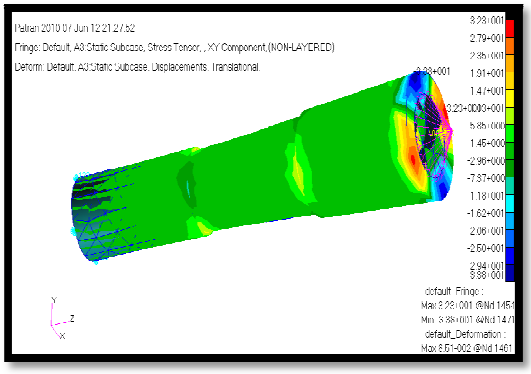	Torque = 200 N.m 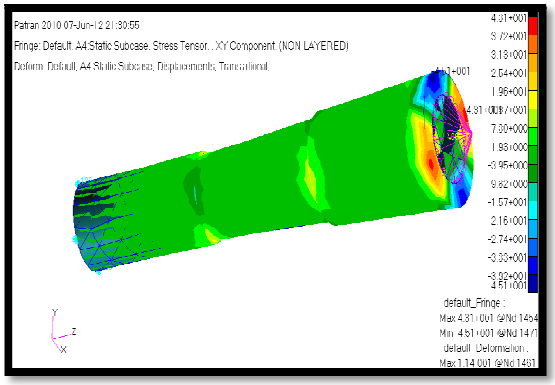

APPENDIX C

RESULT FROM PATRAN ANALYSIS

Ratio of two diameters shaft, D / d = 1.33

Radius of fillet =1.5mm	
Torque = 50 N.m 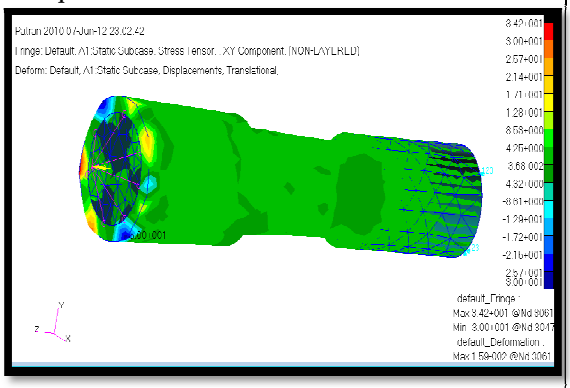	Torque = 100 N.m 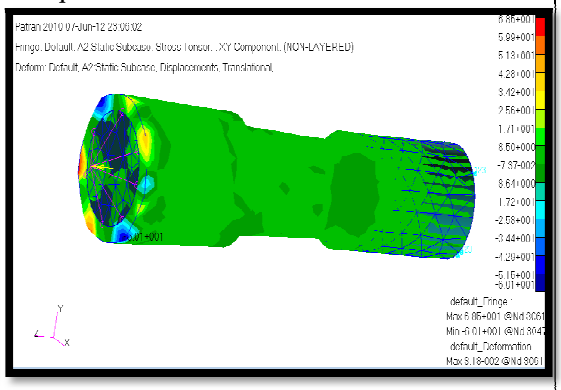
Torque = 150 N.m 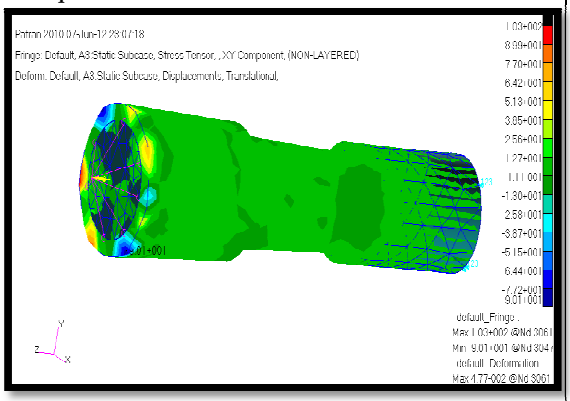	Torque = 200 N.m 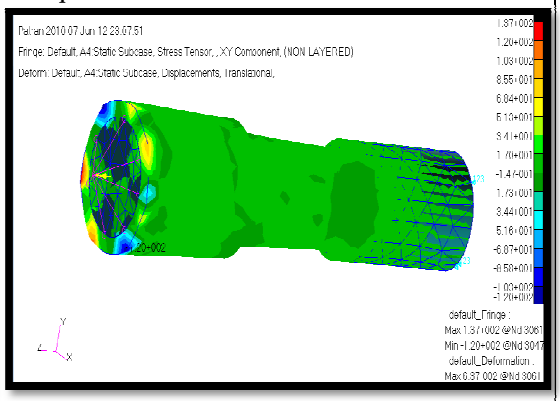

Ratio of two diameters shaft, D / d = 1.33

Radius of fillet =3mm	
Torque = 50 N.m 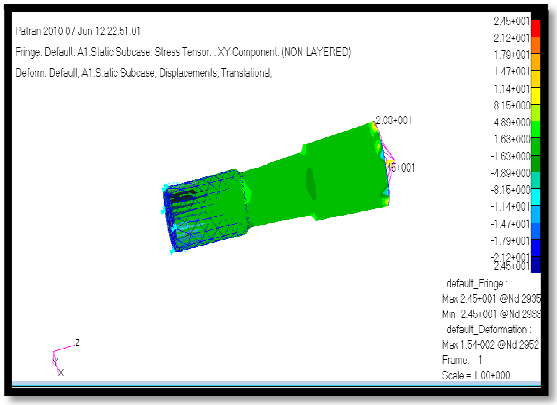	Torque = 100 N.m 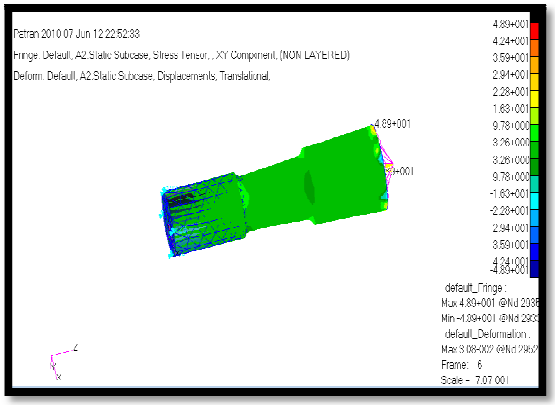
Torque = 150 N.m 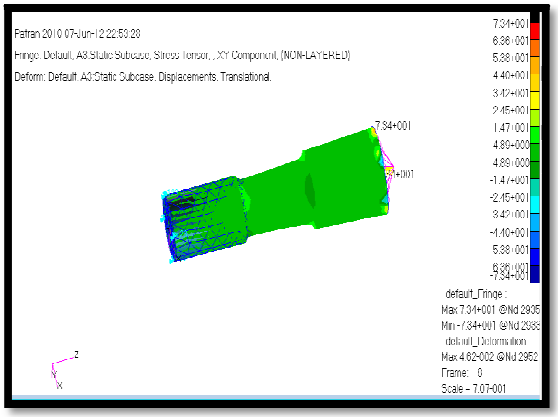	Torque = 200 N.m 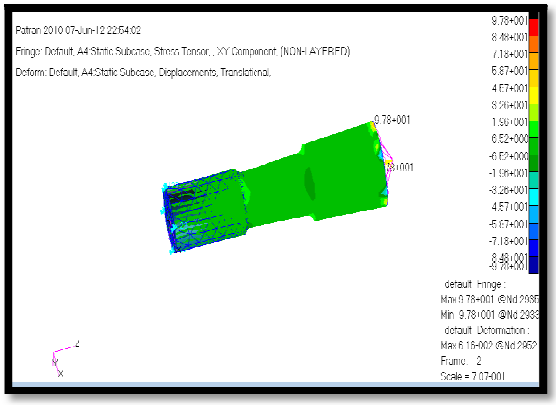

Ratio of two diameters shaft, D / d = 1.33

Radius of fillet =4.5mm	
Torque = 50 N.m 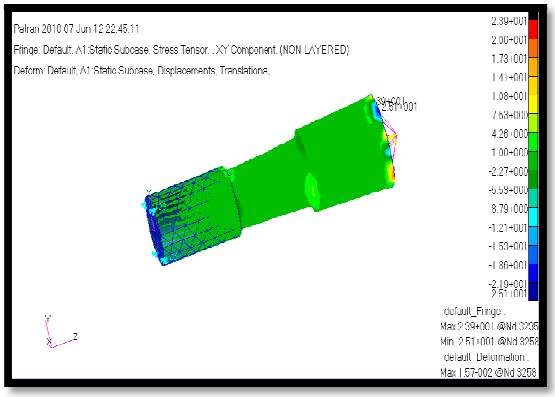	Torque = 100 N.m 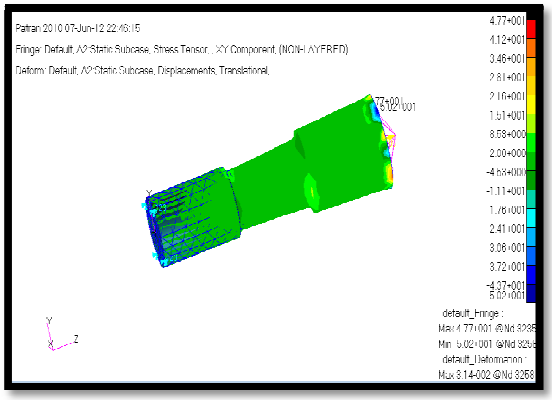
Torque = 150 N.m 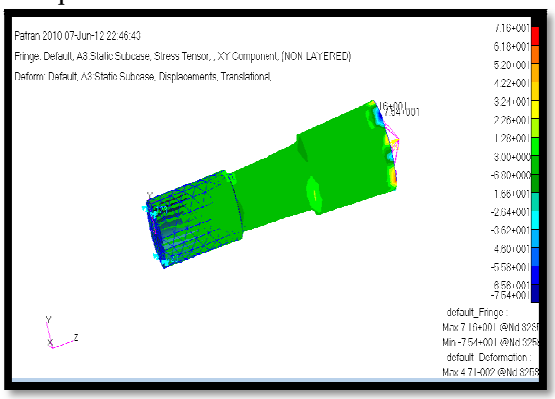	Torque = 200 N.m 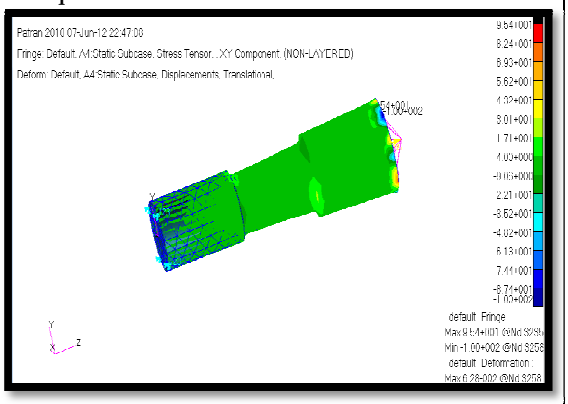

Ratio of two diameters shaft, D / d = 1.33

Radius of fillet =6mm	
Torque = 50 N.m 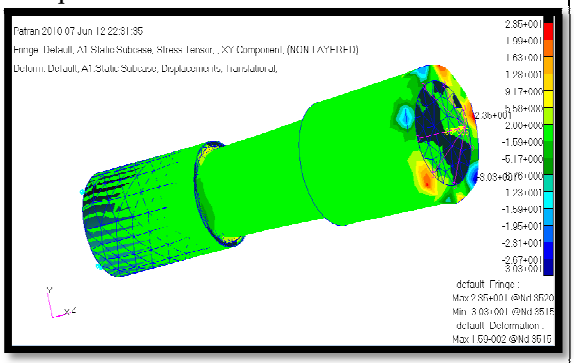	Torque = 100 N.m 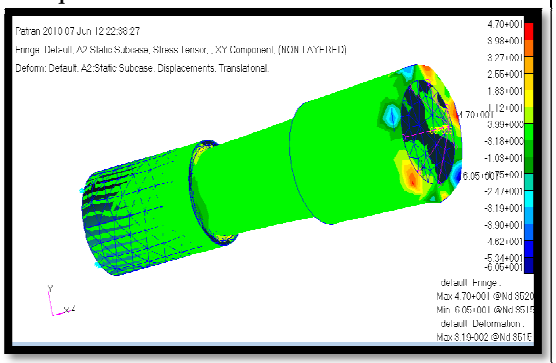
Torque = 150 N.m 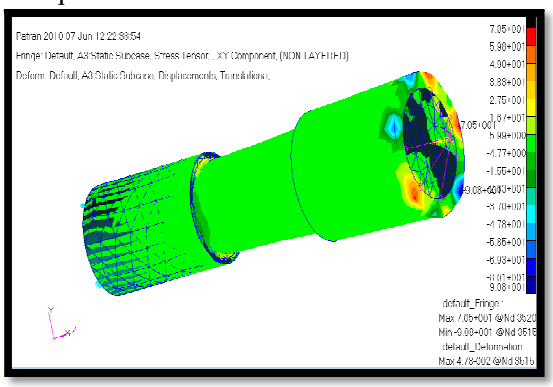	Torque = 200 N.m 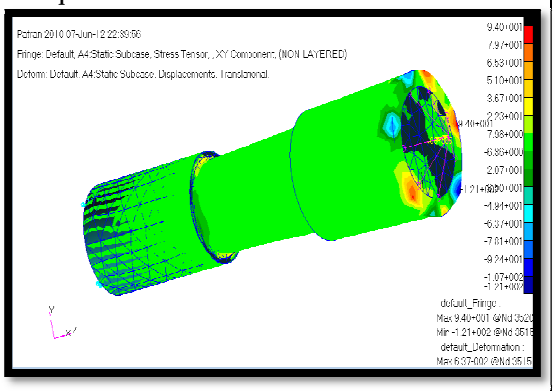

Ratio of two diameters shaft, D / d = 1.33

Radius of fillet =7.5mm	
Torque = 50 N.m 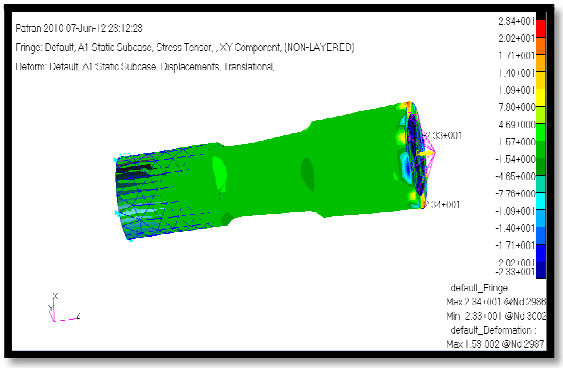	Torque = 100 N.m 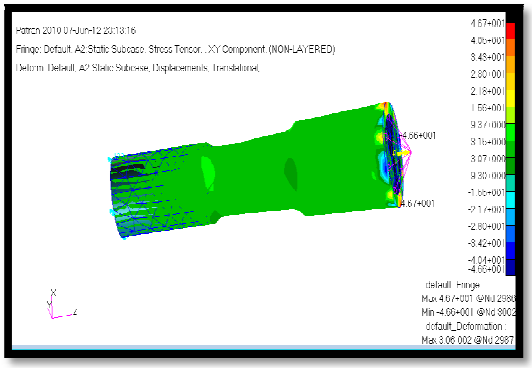
Torque = 150 N.m 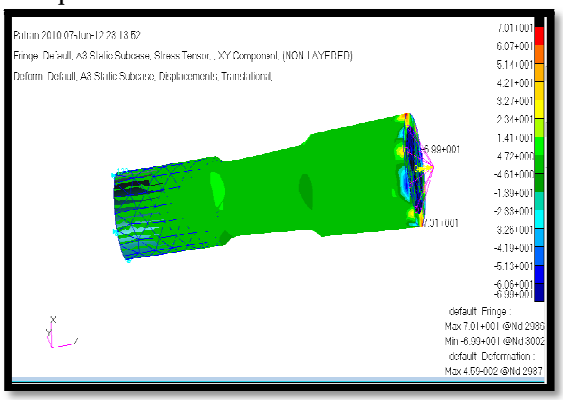	Torque = 200 N.m 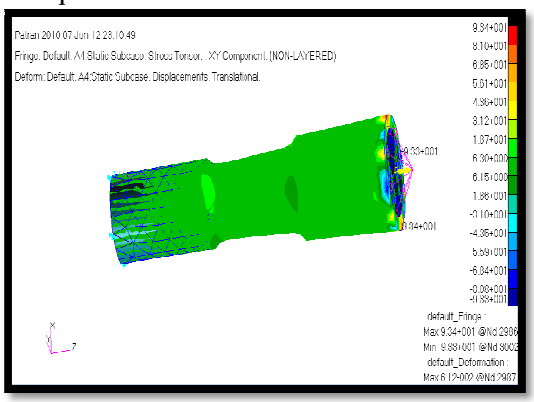

Ratio of two diameters shaft, D / d = 1.33

Radius of fillet =9mm	
Torque = 50 N.m 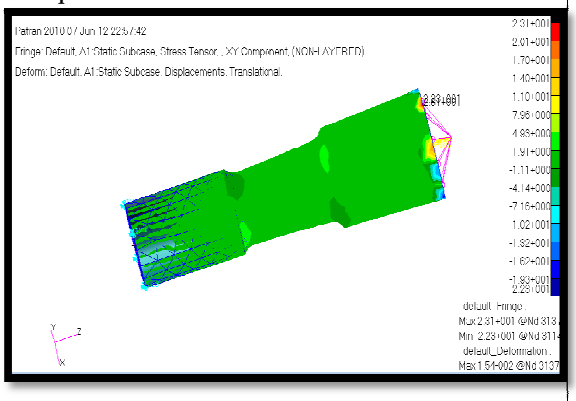	Torque = 100 N.m 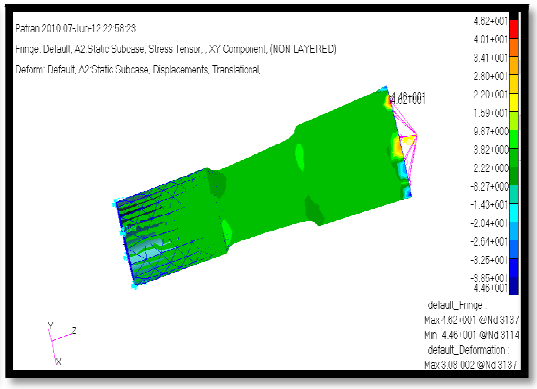
Torque = 150 N.m 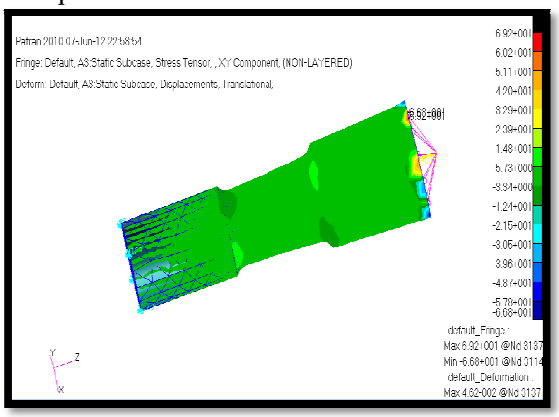	Torque = 200 N.m