UNIVERSITI MALAYSIA PAHANG

DECLARATION OF THESIS / UNDERGRADUATE PROJECT PAPER AND COPYRIGHT

Author's full name : ROSLINA BT SAPUAN

Date of birth : 19 MAY 1985

Title : SIMULATION & DATA VALIDATION OF SMALL-SCALE LNG SYSTEM.

Academic Session : 2007/2008

I declare that this thesis is classified as:

☐	**CONFIDENTIAL**	(Contains confidential information under the Official Secret Act 1972)*
☐	**RESTRICTED**	(Contains restricted information as specified by the organization where research was done)*
√	**OPEN ACCESS**	I agree that my thesis to be published as online open access (full text)

I acknowledged that University Malaysia Pahang reserves the right as follows:

1. The thesis is the property of University Malaysia Pahang.
2. The Library of University Malaysia Pahang has the right to make copies for the purpose of research only.
3. The Library has the right to make copies of the thesis for academic exchange.

Certified by:

SIGNATURE	SIGNATURE OF SUPERVISOR
850519-04-5362	EN. ABDUL HALIM B. ABDUL RAZIK
(NEW IC NO./PASSPORT NO.)	NAME OF SUPERVISOR
Date: 16 MAY 2008	Date: 16 MAY 2008

NOTES : * If the thesis is CONFIDENTAL or RESTRICTED, please attach with the letter from the organization with period and reasons for confidentiality or restriction.

"I hereby declare that I have read this thesis
and in my opinion this thesis is sufficient in terms of scope and quality for the
award of the degree of Bachelor of Chemical Engineering (Gas technology)"

Signature	: ……...
Name of Supervisor	: En. Abdul Halim bin Abdul Razik
Date	: 16th May 2008

SIMULATION & DATA VALIDATION OF SMALL-SCALE LNG SYSTEM

ROSLINA BTE SAPUAN

A thesis submitted in fulfillment of the requirements for the award of the degree of
Bachelor of Chemical Engineering (Gas Technology)

Faculty of Chemical & Natural Resources Engineering
Universiti Malaysia Pahang

MAY 2008

I declare that this thesis entitled “Simulation & Data Validation of Small-scale LNG System” is the result of my own research except as cited in the references. The thesis has not been accepted for any degree and is not currently submitted in candidature of any other degree.

Signature : .....

Name : .....

Date : .....

To my beloved father and mother, thanks for your loving and supports.

To my lovely brother and sister, hope this will be an encouragement to both of you.

ACKNOWLEDGEMENT

I wish to express my sincere appreciation to my thesis supervisor, Mr. Abdul Halim bin Abdul Razik, for encouragement, guidance, critics and tolerance. I am also very thankful to my panels of presentation that helping so much with their guidance and critics.

I would like to acknowledge all my colleagues who have provided assistance and ideas. Their views and tips are useful indeed. I am grateful to my family members and Mr. Mohd. Fikri, for being such an inspiration and supporters to me, through thick and thin. Thank you.

ABSTRACT

Liquefaction of natural gas is a process where the natural gas was condensed to a liquid through a cooling process and the original volume of natural gas is being converted into liquefied natural gas by a factor of more than 600 which allows for its efficient transport and storage. There are three basic types of liquefaction methods, which are i) classic cascade cycle, ii) cascade cycle with mixed coolant and iii) decompression cycle with a turbo-expander. However, mixed-refrigerant (MR) process is preferred, because the MR process is simple, low equipment count and can reduce hydrocarbon inventory. The study is based on Cao *et al.* (2005), where the flowsheet showed incomplete process data. Based on this, the material and energy (M&E) balance can not be established. Such establishment is important to analyze the performance of the existing LNG system and to propose appropriate modification. The objective of this study is to overcome the problem arise in the Cao's system by simulate and validating the result from MRC process. For this study, the method of analysis that will be used is the structural decomposition approach. This method has been chosen because it is difficult to converge the LNG exchanger units without enough or complete process data. With this approach, a simulation of the system can be done by using the HYSYS software, which includes the use of Peng-Robinson (PR) and Lee-Kesler-Plocker (LKP) equations of states. Also, the other method that has been applied is sum square error (SSE). Since simulation and data validation processes are based on estimation, it will produce errors. The first trial with the value for pressure drop of each cooler and heater units is 15 kPa produces the smallest error among other trials. So, the process data in this trial have the highest possibility to represent the MRC in Cao's system.

ABSTRAK

Pencecairan gas asli adalah proses di mana gas asli telah dikondensasikan menjadi cecair melalui proses penyejukan dan isipadu asal gas asli ditukarkan ke bentuk isipadu cecair gas asli sebanyak lebih daripada 600 kali ganda bagi membenarkan proses pengangkutan dan simpanan yang lebih efisyen. Kaedah pencampuran bahan penyejukan, 'mixed refrigerant' (MR) lebih digemari kerana lebih mudah, melibatkan bilangan alat-alat yang sedikit, dan boleh mengurangkan inventori hidrokarbon. Berdasarkan kajian yang dijalankan terhadap hasil kerja Cao et al. ianya tidak mengandungi data-data proses yang lengkap. Berdasarkan ini, persamaan imbangan untuk bahan dan tenaga bagi hasil kajian tidak dapat dibentuk. Hal ini penting bagi menganalisa keupayaan system LNG yang wujud dan bagi mengesyorkan idea-idea modifikasi yang bersesuaian. Objektif kajian ini adalah untuk mengatasi masalah yang timbul di dalam sistem Cao menggunakan langkah 'simulasi dan pengesahan' keputusan daripada proses MRC. Cara analisa yang digunakan adalah 'structural decomposition', kerana ia boleh mengatasi kesukaran menganalisa unit penukar LNG tanpa data yang lengkap. Menggunakan langkah ini, simulasi sistem dapat dijalankan menggunakan perisian HYSYS, di mana ia melibatkan persamaan Peng-Robinson (PR) dan juga Lee-Kesler-Plocker (LKP). Di sampaing itu, turut digunakan ialah 'sum of square error (SSE)'. Memandangkan proses simulasi dan pengesahan data adalah berdasarkan "try-and-error", setiap pengiraan akan menghasilkan perbezaan dengan data asal. Pengiraan pertama dengan nilai penurunan tekanan sebanyak 15 kPa untuk setiap unit penyejuk dan pemanas telah menghasilkan nilai perbezaan terkecil. Ini bermakna, data-data proses yang digunakan dalam pengiraan ini boleh digunakan untuk mewakili proses MRC ini.

TABLE OF CONTENTS

CHAPTER	TITLE		PAGE
	ABSTRACTS		i
	ABSTRAK		ii
	TABLE OF CONTENTS		iii
	LIST OF TABLES		v
	LIST OF FIGURES		vi
	LIST OF APPENDIX		vii
1.0	**INTRODUCTION**		
	1.1	Background of Study	1
	1.2	Problem Statement	6
	1.3	Scope of Research Work	9
	1.4	Objective of the Study	9
2.0	**LITERATURE REVIEW**		
	2.1	LNG Simulation	10
	2.2	Structural Decomposition Method	12
3.0	**RESEARCH METHODOLOGY**		
	3.1	Method of Analysis	14
	3.2	Solving Techniques	18
4.0	**RESULTS AND DISCUSSION**		
	4.1	Results	20
	4.2	Discussion	27

5.0 CONCLUSION AND RECOMMENDATION

5.1 Conclusion 30

5.2 Recommendation 30

REFERENCES 32

APPENDIX 34

LIST OF TABLES

TABLE NO.	TITLE	PAGE
1.1	List of data from Cao's system	8
4.1	Optimization result of the MRC liquefaction process	20
4.2	First trial with pressure drop of 15 kPa	22
4.3	Second trial with pressure drop of 20 kPa	23
4.4	Third trial with pressure drop of 25 kPa	24
4.5	Fourth trial with pressure drop of 30 kPa	25
4.6	Fifth trial with pressure drop of 35 kPa	26

LIST OF FIGURES

FIGURE NO.	TITLE	PAGE
1.1	Block Diagram for Typical LNG Plant	4
1.2	Mixed-refrigerant cycle liquefaction process (MRC)	7
3.1	NG flow in MRC process	15
3.2	Mixed-refrigerant flow diagram in MRC process	17
3.3	Solving techniques for this study	19
4.1	NG flow in MRC process with complete process data	28
4.2	Mixed-refrigerant flow diagram in MRC process with complete process data	29

LIST OF APPENDIX

APPENDIX	TITLE	PAGE
A	Calculation for the liquefaction rate	34
B	Calculation for the load of water-cooling	35
C	Calculation for energy balance	36
D	Calculation for the power consumption of compressors	37
E	Calculation for the power per unit LNG	38
F	Calculation for sum square error (SSE)	39

CHAPTER 1

INTRODUCTION

1.1 Background of Study

Natural gas (NG) is a combustible mixture of hydrocarbon gases. While natural gas is formed primarily of methane, it can also include ethane, propane, butane, and pentane. It is colorless, odorless, and lighter than air. The substance that oil companies sell as natural gas is almost pure methane, with the other gaseous components removed. When it burns, methane releases was a large amount of energy, which makes it a useful fuel. Methane is sometimes called marsh gas because it forms in swamps as plants and animals decay underwater. Methane is naturally odorless, but gas companies added traces of smell compounds to natural gas so that people will be able to smell gas leaks and avoid danger (Archives of Industry News, 2003).

Transportation to distant markets through gas pipelines is not always economically or technically feasible due to some reasons such as unstable structure of the ground, landfill sites, aggressive soil, running ground or gravel, traffic loaded routes and where places have traffic loaded routes. As a result, natural gas liquefaction has become a viable and widely accepted alternative. The economics of liquefying natural gas are obtained by the reduction of natural gas volume upon liquefying and give the benefit to store and transport it in large quantity (Rojey and Jaffrett, 1997).

The development of liquefied natural gas (LNG) industry in Malaysia which started in early sixties, has enabled NG could be transported across national boundaries over great distances. In 1993, the largest consumer of LNG was the Asia Pacific region with trade figures totaling 23.5 million tones, contributed almost 70% of total LNG trade. Malaysia in particular, has become the second largest supplier of LNG in the region. The completion of Petronas's third LNG plant in Tanjung Kidurong, Bintulu, in 2003 marks another milestone for the national oil company. The combined production of the three LNG plants consists MLNG, MLNG 2 and MLNG 3 is 23 million tonnes per year, and the biggest buyers are Japan, South Korea and Taiwan. Malaysia is currently the world's third largest LNG exporter, accounting for 13% or 15 million tonnes a year (2002) of global exports, after Indonesia and Algeria. In 2002, LNG earned RM12.4 billion, making up 5.6% of the country's gross national product. The three LNG plants within its Bintulu LNG Complex make Malaysia the world's largest LNG producer in a single location (Archives of Industry News, 2003).

Due to clean burning characteristics and the ability to meet stringent environmental requirements, the demand for NG has increased considerably, and projections show a steady increment for the next several years. Of course, a clean burning-methane rich gas gets higher demand than a typical raw NG exists in nature, which often contains additional components such as heavier hydrocarbons and other impurities that may include carbon dioxide, hydrogen sulfide, nitrogen, helium, water, and even trace contaminants such as mercury.

LNG is NG that has been liquefied by reducing its temperature of about -162°C at atmospheric pressure. LNG has more advantages compared to compressed natural gas (CNG) and liquefied petroleum gas (LPG). One volume of this liquefied product takes up about 600 of the volume of NG. LNG is only about 45% the density of water, odorless, colorless, non-corrosive, and non-toxic. When vaporizes, it only burns in concentrations of 5% to 15% volume when mixed with air. Neither LNG nor its vapor can explode in an unconfined environment (Fredericks, Nasso and Chenes, 2007).

In terms of flexibility, LNG diversifies the conventional method of gas supply through pipeline and it also can meet the higher demand for NG during winter season. Yet, it is an environmental friendly fossil fuel. LNG undergoes additional purification where methane accounts for 95% of its composition, with limitation of about presences of other components. Besides that, LNG is safer because if there has a potential leakage, LNG will evaporates and dissolves in the air. Modern tank construction technologies such as a full containment tank, as well as special procedures and safety systems, ensure an exceptionally high level of safety criteria for the LNG handling, transportation and storage (US Department of Energy, 2004).

Conditions required to condense and liquefy NG depend on several factors including the composition of NG, the market that it will be sold to, and the liquefaction process being used. Typically, the liquefaction conditions involve the range of temperature between -120 and -170°C, and pressures of between 101 and 6000 kPa. Prior to the liquefaction process, impurities such as hydrogen sulfide and carbon dioxide will be removed from the feed gas in the pre-treatment facilities in order to avoid equipment being plugged during the liquefaction process. After the pre-treatment process, the treated NG will be passed through two other processes. Firstly is the dehydration stage where water will be removed from the feed gas. Secondly, the heavier components will be removed from the gas mixture. Finally, the gas which has primarily methane will be condensed to become liquid at or close to atmospheric pressure by reducing the temperature below -162°C, which is the boiling point of methane (Fredericks, Nasso and Chenes, 2007). Then only, the LNG produced will be sent to the LNG storage before being transported to the ships or directly to the customers. This whole process is shown in Figure 1.

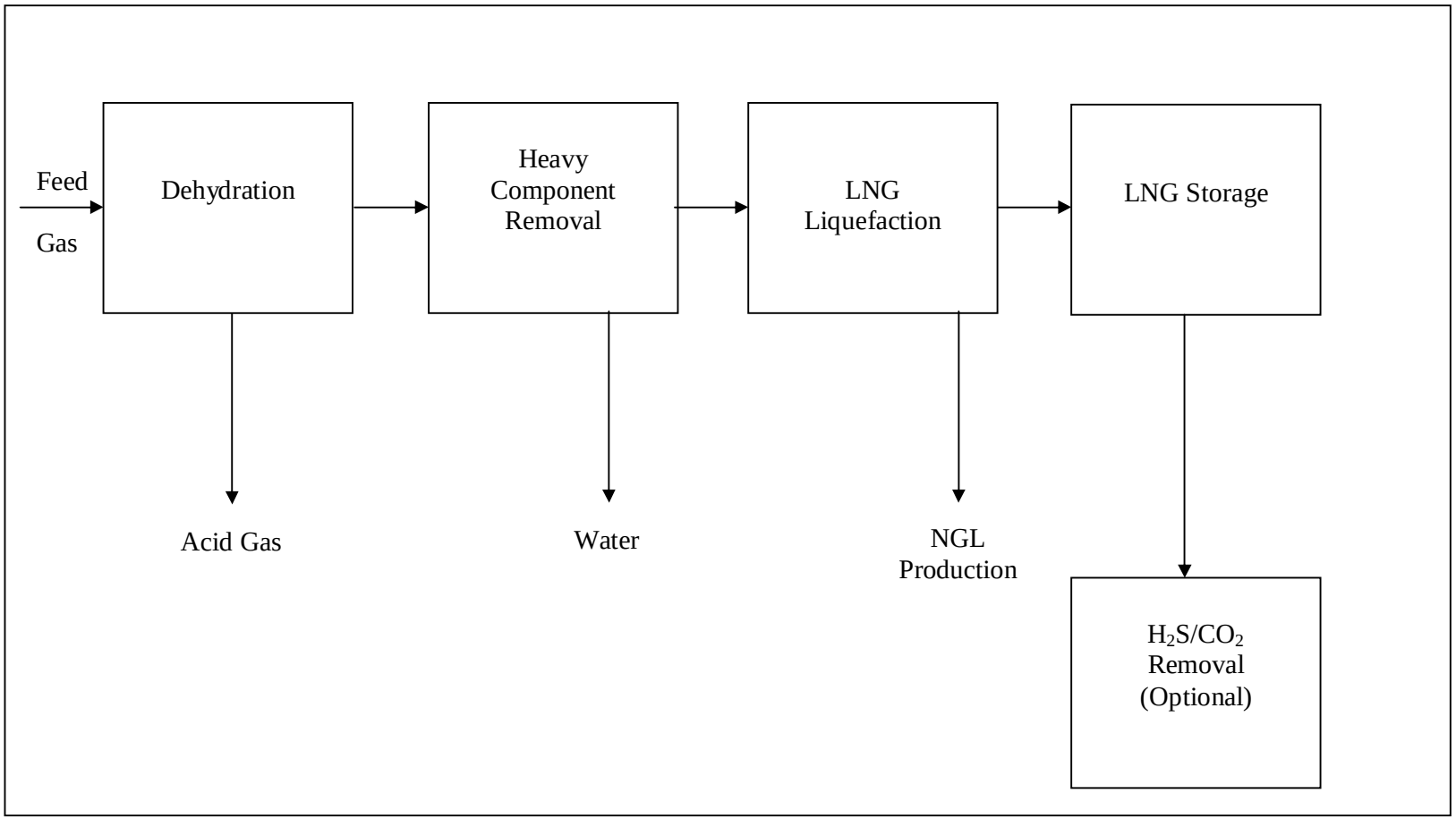

Figure 1.1: Block Diagram for Typical LNG Plant

LNG is transported by cryogenic sea vessels or cryogenic road tankers and stored in specially designed tanks. Because the reduction of volume of NG to LNG is in a ratio of about 1:600 at standard temperature and pressure (STP), it is much more cost-efficient to transport over long distances where pipelines do not exist. In addition, when transporting NG by pipelines is not possible or economical, as mentioned before, it can be shipped by LNG vessels. The most common tank types of LNG vessels are membrane (prismatic), Moss Rosenberg (spheres) or Self-Supporting Prismatic Type (Shukri and Barclay, 2007).

For offshore application, LNG system must be compact and lighter weight, support modular design, and offer higher inherent process safety than traditional onshore installation. Besides that, offshore LNG system must also consider deployment and operation in a marine environment where vessel motion, ease of operation, low equipment count, quick startup, process simplicity, and high availability are important (Shukri and Barclay, 2007).

The production of LNG is achieved by cooling and condensing a feed gas stream against multiple refrigerant streams provided by a recirculating refrigerant system. Cooling of the NG feed is accomplished by various cooling process cycle such as the well-known cascade cycle in which refrigeration is provided by three different refrigerant loops. Such cascade cycle uses methane, ethylene and propane cycles in sequence to produce refrigeration at three different temperature levels. Another well-known refrigeration cycle uses a propane precooled, mixed refrigerant cycle (MRC) in which a multicomponent refrigerant mixture produces refrigeration over a selected temperature range. The mixed refrigerant can contain hydrocarbons such as methane, ethane, propane, and other light hydrocarbons, and also may contain nitrogen. Versions of this efficient refrigeration system are used in many operating LNG plants around the world. The issue of designing an LNG plant is the power consumption of the compressors (Kidney and Parrish, 2006).

There are three types of LNG plant, which are base load, peak-shaving or also known as back-up and small-scale plant. Thermodynamically, mixed-refrigerant (MR) process is preferred instead of cascade system because the MR process is simple, low equipment count and can reduce hydrocarbon inventory. Additionally, the MR process can benefit by using a two-phase expander because the refrigerant can be isentropically expanded to produce electricity. MR process is suitable for offshore NG liquefaction and a cost effective monetization of stranded gas resources (Kidney, A.J., and Parrish, 2006). In dealing with small-scale LNG system, MR gives several advantages which include incomplexity and lower number of equipment, valve, line, instrument counts.

1.2 Problem Statement

Two typical types of small-scale NG liquefaction process in skid-mounted package were designed and simulated by Cao *et al.* (2005) which are MRC and N_2-CH_4 expander cycle. The key parameters of the two processes were compared, and the matching of the heating and cooling curves in heat exchangers was also analyzed. However, in this work, only MRC process will be focused. The flowsheet of this MRC process is shown in Figure 1.2 with incomplete process data.

The MRC flowsheet showed incomplete process data. All the given and unknown information for each stream is tabulated in Table 1.1. As shown in the table, most of the process data is unknown. Stream 1 until stream 13 indicates the stream for refrigerant cycle. Meanwhile, stream 14 until 19 indicates the streams for natural gas stream flow. The flowrate of natural gas is 4.0 kmol/h and the flowrate of mixed refrigerant is 60.25 kmol/h. From the stream 4 until stream 8, the tempereature of the stream is decreasing from 32°C until -150°C. It shows that this is where the liquefaction process is taking place. The liquefaction process continues when the natural gas flows into stream 16 until 19 where the product of LNG will be determined.

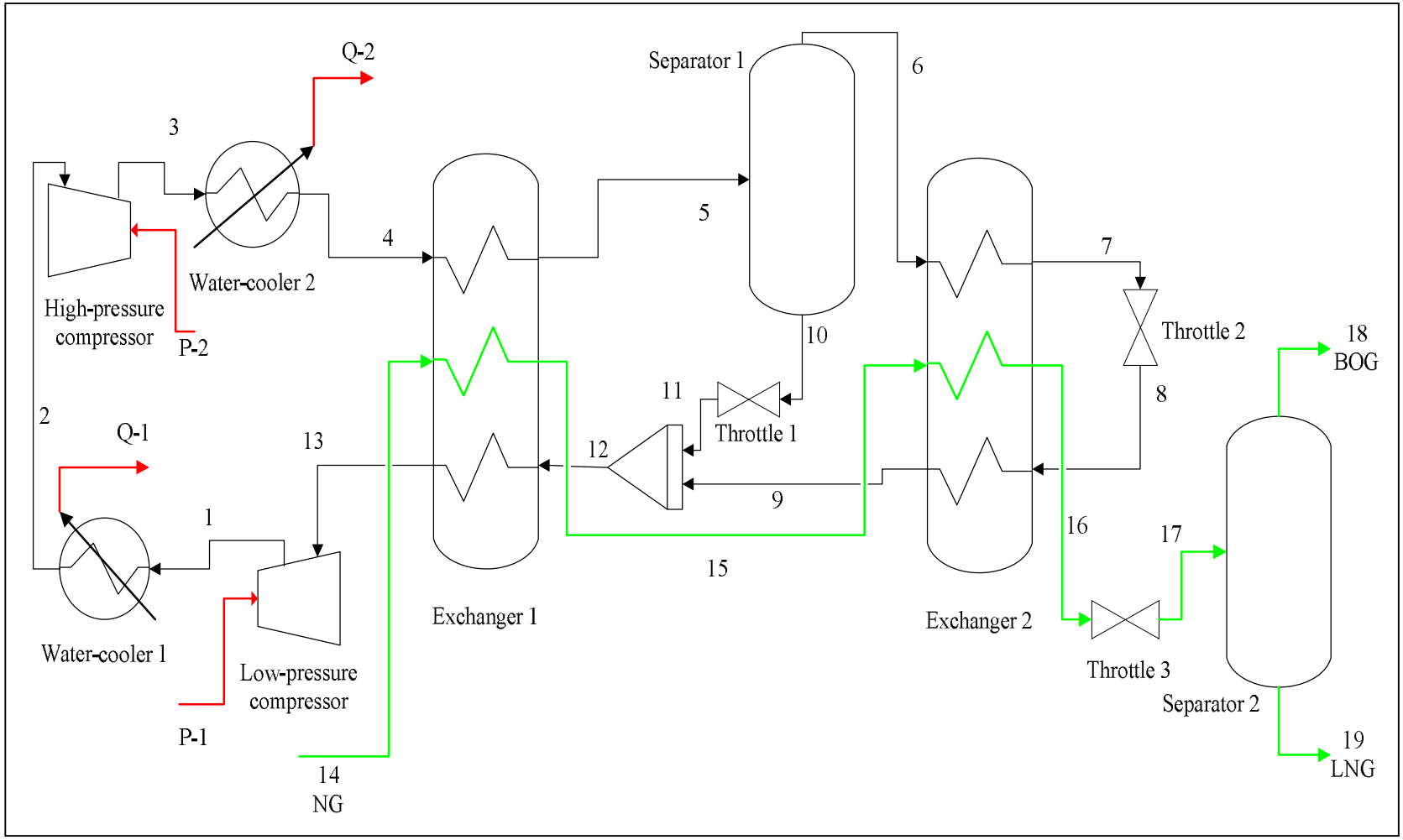

Figure 1.2: Mixed-refrigerant cycle liquefaction process (MRC)

Table 1.1: List of data from Cao's system

No. of streams	Temperature (°C)	Pressure (MPa)	Flowrate (kmol/h)
Stream 1	Unknown	Unknown	**60.25**
Stream 2	Unknown	Unknown	**60.25**
Stream 3	Unknown	Unknown	**60.25**
Stream 4	**32.0**	**2.6**	**60.25**
Stream 5	**-35.0**	Unknown	**60.25**
Stream 6	**-35.0**	Unknown	Unknown
Stream 7	**-148.0**	Unknown	Unknown
Stream 8	**-150.0**	Unknown	Unknown
Stream 9	**-38.0**	Unknown	Unknown
Stream 10	Unknown	Unknown	Unknown
Stream 11	Unknown	Unknown	Unknown
Stream 12	**-76.0**	Unknown	**60.25**
Stream 13	**29.0**	**0.29**	**60.25**
Stream 14	**32.0**	**5.0**	**4.0**
Stream 15	**-70.0**	Unknown	**4.0**
Stream 16	**-148.0**	Unknown	**4.0**
Stream 17	Unknown	Unknown	**4.0**
Stream 18	Unknown	Unknown	Unknown
Stream 19	**-151.3**	**0.20**	Unknown

Due to the incompleteness of process data published by Cao *et al.* (2005), the material and energy (M&E) balance can not be established. Such establishment is important to analyze the performance of the existing LNG system and to propose appropriate modifications.

1.3 Scope of Research Work

As was mentioned before, the focus of this study is only for the mixed refrigerant cycle (MRC), where the liquefaction process of the NG is achieved by using of a mixed refrigerant. It is based on Cao *et al.* (2005) small-scale LNG flowsheet.

1.4 Objective of the Study

The objective of this study is to simulate and validate the results in MRC flowsheet done by Cao *et al* (2005) by applying the concept of structural decomposition approach. Once the validated data are obtained, further analysis and process improvement can be done.

CHAPTER 2

LITERATURE REVIEW

2.1 LNG Simulation

Based on Cao *et al.* system (2005), the liquefaction process of mixed-refrigerant cycle (MRC), has removed the common cycle of propane pre-cooling, making the process simpler and more compact. The MRC uses a combination of refrigerants in a single refrigeration cycle, which makes it possible to supply refrigeration at continuously changing temperature.

Based on Figure 2.1, a warm and low pressure MR stream consisting of nitrogen (N_2), methane (C_1H_4), ethane (C_2H_6), propane (C_3H_8), and normal butane (nC_4H_{10}) is compressed in two stages. This compression requires an intercooler and aftercooler to reject the heat from the liquefaction process to the environment. The high pressure MR is partially condensed in the aftercooler before flowing into the cryogenic heat exchanger 1. In this exchanger, this stream is continuously cooled and condensed tubeside against the cold and low pressure mixed refrigerant stream.

Once condensed, the cold and high pressure MR is expanded through a flashing expander that isentropically expands the MR into the vapor region, thus recovering the work for both the subcooled liquid expansion as well as the phase change. The cold, expanded MR then return to the heat exchanger 1 as the cold stream and continuously

cools the warm refrigerant stream and cools, condenses and subcools the incoming high pressure, dry NG. The warm, vaporized, low pressure MR then leaves heat exchanger 1 and goes to heat exchanger 2 and doing the same task before returns to the first stage of the refrigerant compressor to complete the cycle.

According to Cao *et al.* (2005), the flow rate of NG feed is 4.0 kmol/h. The simulating calculation and optimization on MRC process were done by using Peng-Robinson (PR) equation of state and Lee-Kesler-Plocker (LKP) equation through HYSYS software. Based on their work, PR or LKP equation is one of the most important Fluid Packages that is the base of the simulation by HYSYS. The optimization problem was to find out the optimum parameter values to make the power consumption lowest, where only specific power consumption (power consumption per unit LNG) is taken as the optimization aim.

As the simulation and calculation of the MRC process has been done, the key parameters of the liquefaction process to be compared and the optimization result is presented.

The paper done by Gavelli *et al.* (2008) describes the use of Fluent, as a widely-used commercial computational fluid dynamics (CFD) code that has been used to simulate one of the tests in the “Falcon” series of LNG spill tests. The “Falcon” test series was the only series that specifically addressed the effects of impoundment walls and construction obstructions on the behavior and dispersion of the vapor cloud. Most other tests, such as the Coyote and the Burro series, involved spills onto water and relatively flat ground. The paper discuss the critical parameters necessary for a CFD model to accurately predict the behavior of a cryogenic spill in a geometrically complex domain, and presents comparisons between the gas concentrations measured during the Falcon-1 test and those predicted using Fluent.

A more rigorous approach to predict the flammable vapor dispersion distance is to use CFD as CFD codes can take into account the physical phenomena that govern the fate of LNG spills into impoundments, such as the mixing between air and the evaporated gas. Before a CFD code can be proposed as an alternate method for the prediction of flammable vapor cloud distances, it has to be validated with proper experimental data. Finally, the paper also discusses the effect vapor barriers have in containing part of the spill thereby shortening the ignitable vapor cloud and therefore the required hazard area. This issue was addressed by comparing the Falcon-1 simulation (spill into the impoundment) with the simulation of an identical spill without any impoundment walls, or obstacles within the impoundment area.

Based on Cameron *et al.* (2005), LNG is a commodity that was complicated to produce, process, ship and distribute. But, dynamic simulation provides a means of managing the risk of all stages of the LNG value chain. Also, this paper describes the technical and research changes that had to be made to a general dynamic simulation program so that it could be used to contribute to the successful exploitation of NG resources in remote and difficult locations.

2.2 Structural Decomposition Method

According to Chen *et al.* (2004), the structural decomposition techniques chosen are fruitfully used to obtain, under certain assumptions, well-known and useful factorizations like the minimum-phase/all-pass factorization and the inner–outer factorization. Given a linear differential state equation, the structural assignment or sensor selection problem is the problem of suitably choosing the output measurement equation in order to ensure that the resulting linear system is endowed with some desired structural properties, like some given finite and infinite zero structure or left/right invertibility.

According to Hubacek *et al*. (2006), the structural decomposition has been widely used to explain the changes that occur in any variable over time or space. It has frequently been utilized to tackle topics related to the environment. For example, it has frequently been applied to energy and air pollution emissions. Structural decomposition analysis can be described as decomposing the change of a variable over, at least two points in time (or space).

Referring to Okushima *et al.* (2007), a new methodology has been suggested for decomposing structural change in a multisector general equilibrium framework, namely the Multiple Calibration Decomposing Analysis (MCDA). The MCDA decomposes structural change in the economy, shown by the change in factor inputs per units of output between periods into one part attributable to price substitution and another attributable to technological change. However, so far, there is no application of structural decomposition on LNG system.

CHAPTER 3

RESEARCH METHODOLOGY

3.1 Method of Analysis

For this study, the method of analysis that will be used is the structural decomposition. This method has been chosen because it is difficult to converge the LNG exchanger units without enough or complete process data. Using this method, the process happened inside the heat exchanger 1 and 2, as shown in Figure 1.2, can be explained by using the heater and cooler units. By using HYSYS, data validation will be implemented for the incomplete flowsheet by Cao *et al*. (2005).

Figure 3.1 and Figure 3.2 illustrate the structural decomposition approach from the original flowsheet in Figure 1.2. In Figure 3.1, C-1 represents the heat exchanger 1, where the inlet temperature of NG is 32°C. The temperature of the feed gas is then being reduced to -70°C which flows in stream 15. Entering the C-2, which represent heat exchanger 2, the temperature of the gas stream was reduced again to the temperature of -148°C. The temperature at stream 17 is unknown, and will be a degree of freedom for the simulation process. After that, entering the separator, the LNG was separate from the boiled off gas (BOG), and exiting the separator at the temperature of -151.3°C at stream 19 in the form of liquid NG.

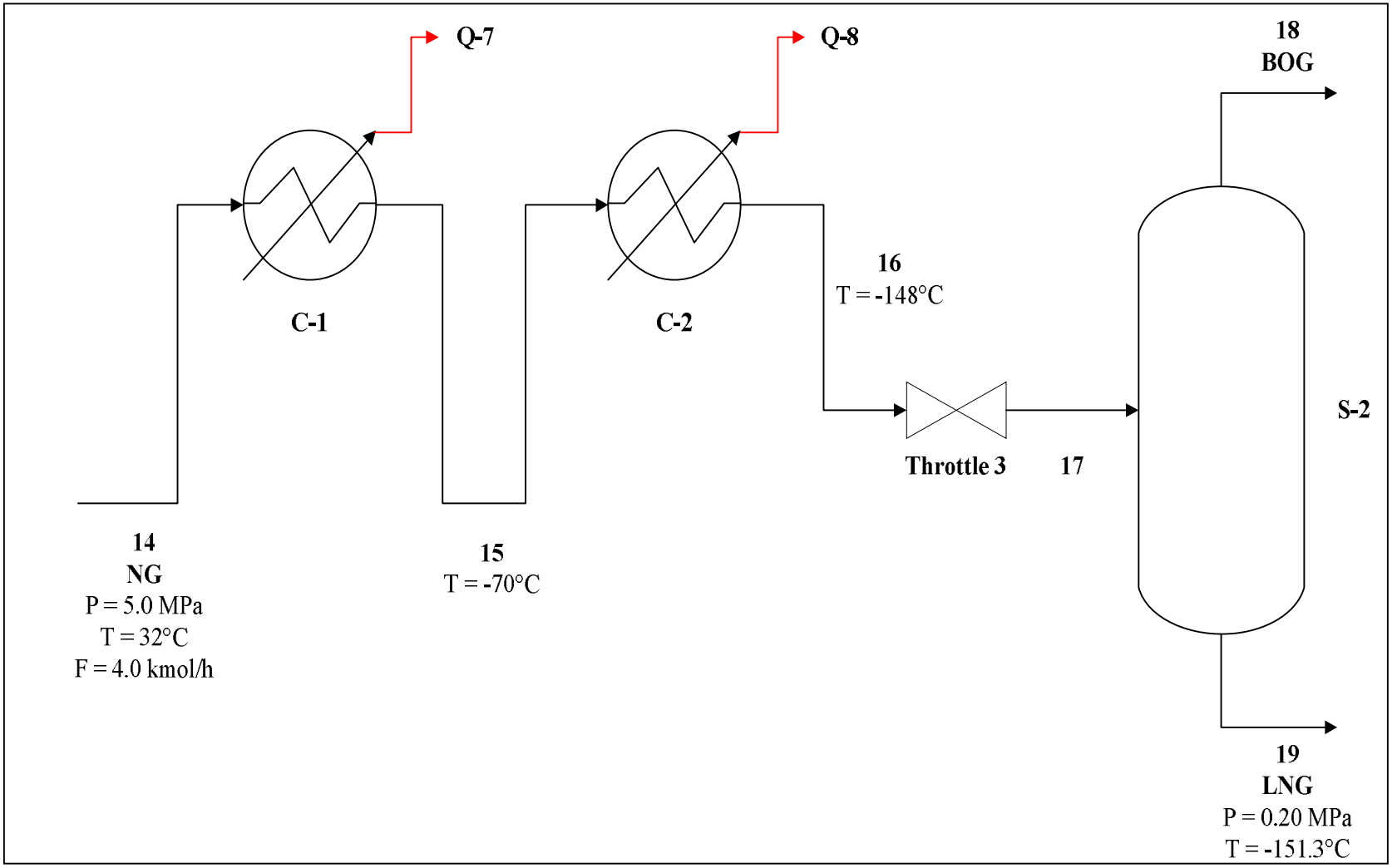

Figure 3.1: NG flow in MRC process

In Figure 3.2, C-3 represents the heat exchanger 1 as a cooler where the temperature of the MR stream will be reduced from 32°C to -35°C. Entering the separator, part of the MR will be condensed before entering the C-4, which represents the heat exchanger 2 as a cooler unit. Here, the temperature is again being reduced to become -148°C. Passing through the throttle T-2, the temperature will be decreased again to -150°C. However, at H-1, which represents heat exchanger 2 as a heater unit, the temperature will be increased back -150°C to become -38°C. The stream then will flow through the mixer, mixing with the liquid stream from the separator, which produces an outlet to stream 12 and from there, the flow will cycled continuously.

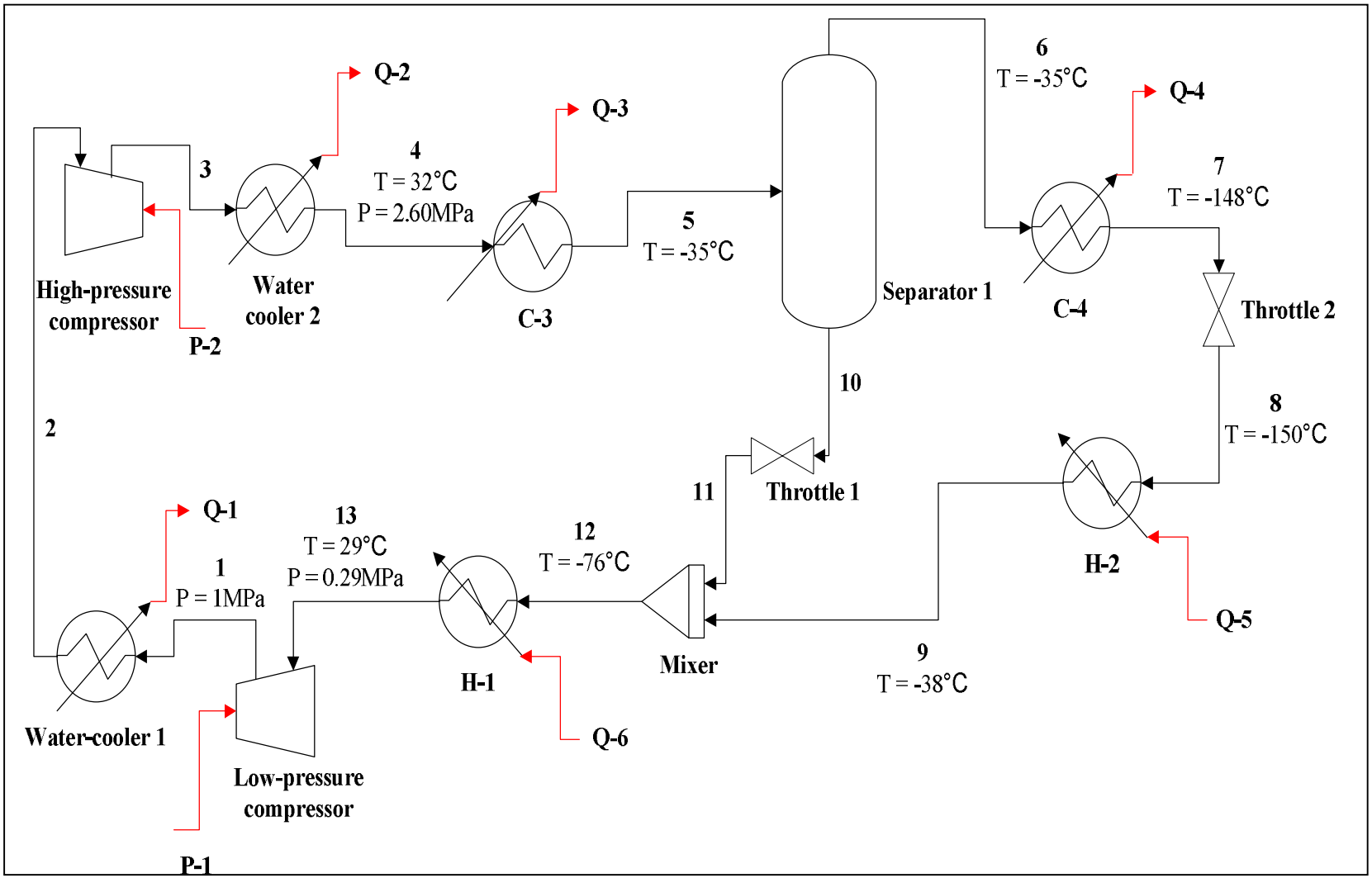

Figure 3.2: Mixed-refrigerant flow diagram in MRC process

3.2 Solving Techniques

Figure 3.3 describe the solving techniques for this work. Firstly, the flowsheet process of mixed-refrigerant cycle (MRC) is obtained from the Cao *et al* (2005). system. An analysis done showed that this system has incomplete process data. The list of known data and incomplete process data of the system has been written in Table 1.1 previously. To simplify the process, which means to obtain the incomplete process data, a structural decomposition approach will be applied. With this approach, a simulation of the system can be done by using the HYSYS software, which includes the use of Peng-Robinson (PR) equation of state and Lee-Kesler-Plocker (LKP) equation.

Several sets of trial with different data will be run. For this study, a different value of pressure drop has been used for cooler and heater units in every trial. The values used are 15 kPa, 20 kPa, 25 kPa, 30 kPa and 35 kPa. Then, the resulted data will be validated by using the approach of sum square error (SSE) as the acceptable values of each trials must be below than 5% error. By using this approach, value of sum square error of each trial will be compared. The trial with smallest value of error will be accepted to be best applied and represent the Cao's system. After that, further process modification and improvement are possible to be made as every process data are complete.

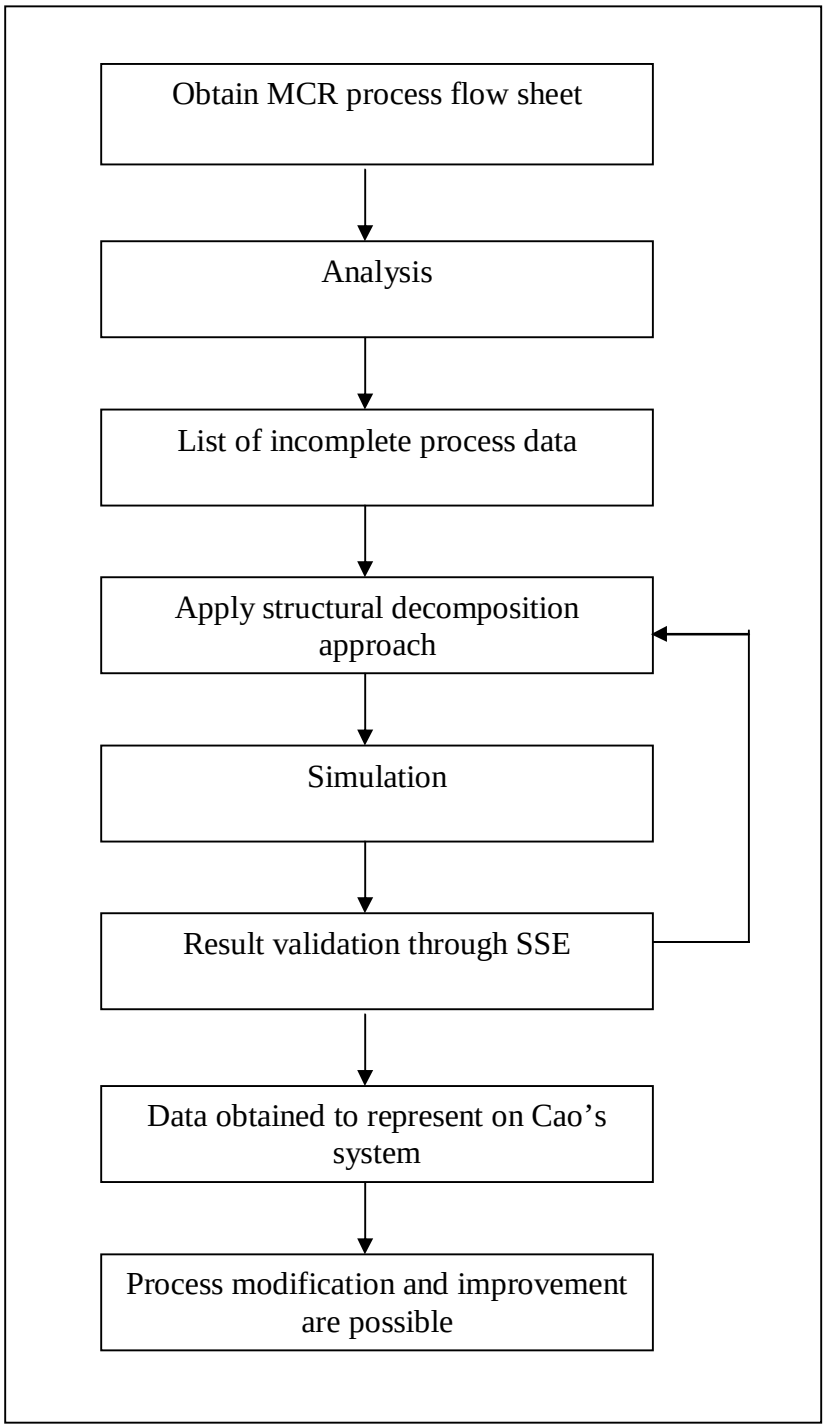

Figure 3.3: Solving techniques for this study

CHAPTER 4

RESULTS AND DISCUSSIONS

4.1 Results

The data obtained from Cao *et al.* (2005), shown in Table 4.1 below, will be used as a guidance to perform the simulation and data validation process.

Table 4.1: Optimization result of the MRC liquefaction process

Flow rate of NG (kmol/h)	Flow rate of refrigerant (kmol/h)	Load of water-cooling (kW)	Power consumption of compressors (kW)	Liquefaction rate	Power per unit LNG (kW/mol/s)
4.000	**60.25**	**145.95**	**129.23**	**0.951**	**122.3**

Since simulation and data validation processes are based on estimation, it will produce errors. This error will be analyzed using the sum square error (SSE) method with the highest possibility to represent the MRC in Cao's system.

For the first trial, a P_{drop} of 15 kPa has been used. In this trial, the power consumption to load water-cooler 1 (WC1) is 79.58 kW and the power consumption to load water-cooler 2 (WC2) is 67.38 kW. So, the total load of water-cooling for the mixed-refrigerant cycle is 146.96 kW and the percentage error of this power consumption compared to the previous simulation is 0.68%. Meanwhile, the power consumption for compressor 1 (P1) is 75.22 kW and 55.79 kW for the second compressor (P2). So, the total amount of power consumption for both of the compressors is 131.01 kW. Compared to the previous simulation by Cao *et al.*, the percentage error is 1.36%. The liquefaction rate is calculated by dividing the flow rate of LNG with the flow rate of NG and is equal to 0.959, which has 0.83% error compared to the previous simulation. The power per unit LNG is calculated by dividing the total power consumptions of compressors with the flow rate of LNG. For this trial, the power per unit LNG is equal to 122.904 kW/mol/s and has a percentage error of 0.49% compared with the previous simulation.

For the other four trials, which used 20 kPa, 25 kPa, 30 kPa and 35 kPa as the value of pressure drop for the heater and cooler units, the same method of calculation is used to obtain the error of each simulation. Each calculation has been summarized into tables of trials where the method of sum square error (SSE) will be used to estimate which trial has the lowest total error of the simulation. Based on the SSE method, the trial that has the lowest value will be the best process data to represent the Cao system. However, to maintain the accuracy of the simulation and calculation, only the simulation with SSE value of less than 5% is acceptable to represent the system.

Table 4.2: First trial with pressure drop of 15 kPa

Parameter	Previous simulation by Cao *et al.* (2005)	Current simulation	Error (%)
Liquefaction rate	0.951	0.959	0.0083
Load of water cooling (kW)	145.95	146.96	0.0068
Energy balance (kW)	C1 = 10.9	C3 + H1 = 10.5	0.0367
	C2 = 5.88	C4 + H2 = 5.36	0.0884
Power consumption of compressors (kW)	129.23	131.01	0.0136
Power per unit LNG (kW/mol/s)	122.3	122.90	0.0049
SSE (Σe^2)			**0.1587**

Table 4.3: Second trial with pressure drop of 20 kPa

Parameter	Previous simulation by Cao *et al.* (2005)	Current simulation	Error (%)
Liquefaction rate	0.951	0.959	0.0083
Load of water cooling (kW)	145.95	147.4	0.0098
Energy balance (kW)	C1 = 10.9	C3 + H1 = 10.55	0.0321
	C2 = 5.88	C4 + H2 = 5.39	0.0833
Power consumption of compressors (kW)	129.23	131.45	0.0169
Power per unit LNG (kW/mol/s)	122.3	123.34	0.0084
SSE (Σe^2)			**0.1588**

Table 4.4: Third trial with pressure drop of 25 kPa

Parameter	Previous simulation by Cao *et al.* (2005)	Current simulation	Error (%)
Liquefaction rate	0.951	0.959	0.0083
Load of water cooling (kW)	145.95	147.86	0.0129
Energy balance (kW)	C1 = 10.9	C3 + H1 = 10.55	0.0321
	C2 = 5.88	C4 + H2 = 5.41	0.0799
Power consumption of compressors (kW)	129.23	131.9	0.0202
Power per unit LNG (kW/mol/s)	122.3	123.62	0.0107
SSE (Σe^2)			**0.1641**

Table 4.5: Fourth trial with pressure drop of 30 kPa

Parameter	Previous simulation by Cao *et al.* (2005)	Current simulation	Error (%)
Liquefaction rate	0.951	0.959	0.0083
Load of water cooling (kW)	145.95	148.31	0.0159
Energy balance (kW)	C1 = 10.9	C3 + H1 = 10.53	0.0339
	C2 = 5.88	C4 + H2 = 5.41	0.0799
Power consumption of compressors (kW)	129.23	132.35	0.0236
Power per unit LNG (kW/mol/s)	122.3	124.16	0.0150
SSE (Σe^2)			**0.1766**

Table 4.6: Fifth trial with pressure drop of 35 kPa

Parameter	Previous simulation by Cao *et al.* (2005)	Current simulation	Error (%)
Liquefaction rate	0.951	0.959	0.0083
Load of water cooling (kW)	145.95	148.76	0.0189
Energy balance (kW)	C1 = 10.9	C3 + H1 = 10.5	0.0367
	C2 = 5.88	C4 + H2 = 5.44	0.0799
Power consumption of compressors (kW)	129.23	132.81	0.0270
Power per unit LNG (kW/mol/s)	122.3	124.60	0.0185
SSE (Σe^2)			**0.1893**

4.2 Discussions

Five different values had been used to do the estimation to converge the mixed-refrigerant cycle. This different value was applied as the value of pressure drop (P_{drop}) for each of water-cooler, cooler and heater units, except for H1, which represents the heater unit of heat exchanger 1. By estimating the value of pressure drop, with an addition of some process data from Cao system, the amount of power consumption by compressors, the total load of water-cooling and the liquefaction rate will be calculated automatically by HYSYS. Also, when this entire amount has been gathered, the power per unit LNG can be calculated by dividing the total power consumption of compressors with the flow rate of LNG.

Each of the cooler and heater units in the mixed refrigerant cycle diagram (refer Figure 3.2) are originally worked as a unit of heat exchanger in the original flow system (refer Figure 1.2). For example, cooler 3 (C3) and heater 1 (H1) in Figure 3.2 represent the heat exchanger 1 in Figure 1.2 meanwhile cooler 4 (C4) and heater 2 (H2) represent the heat exchanger 2. Due to this condition, the energy balance of C1 of Figure 3.1 must be equal, or approximately equal to the total amount of energy balance for C3 and H1, and the energy balance for C2 in Figure 3.1 must be equal, or approximately equal to the total amount of energy balance for C4 and H2. The calculation is repeated for each trial to estimate the total errors before the SSE method can be applied.

After the current simulation process data has been obtained, it will be compared with the previous simulation process data which will be calculated by percentage of error. Then, the method of sum square error will be used to calculate which trial has the lowest total errors. The following figures are example of NG flow and mixed-refrigerant flow with complete process data.

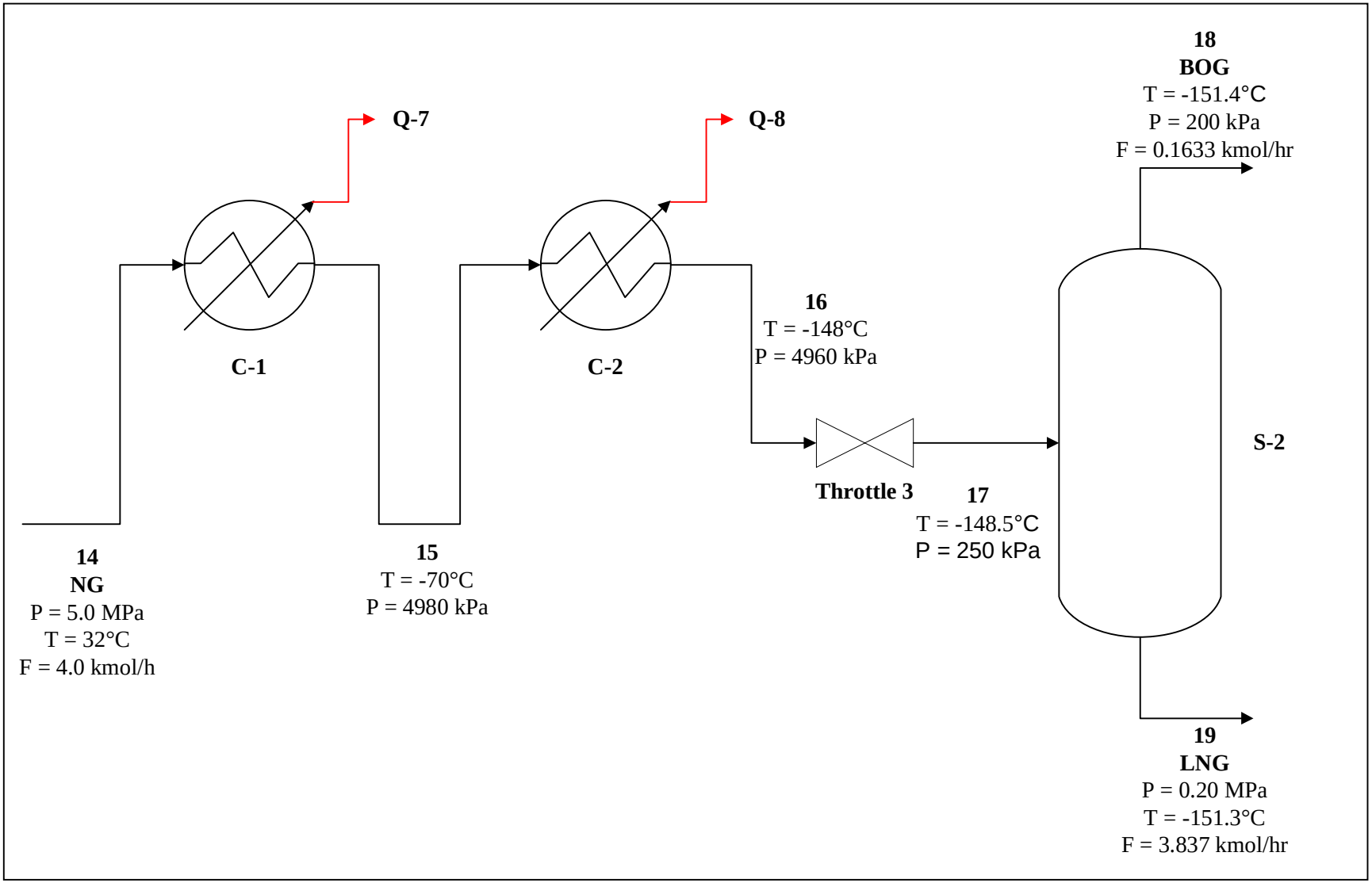

Figure 4.1: NG flow in MRC process with complete process data

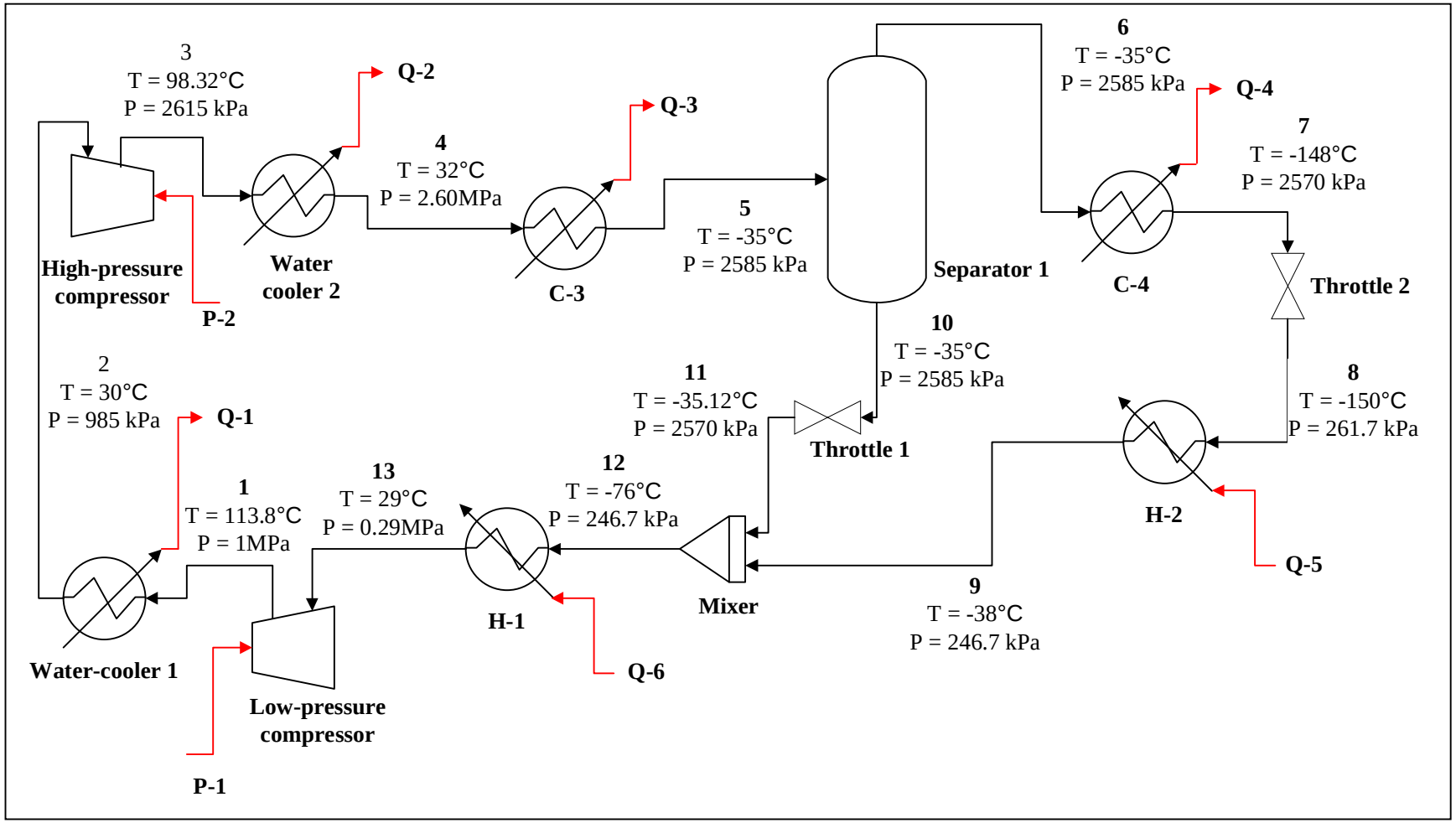

Figure 4.2: Mixed-refrigerant flow diagram in MRCprocess with complete process data.

CHAPTER 5

CONCLUSION & RECOMMENDATIONS

5.1 CONCLUSION

Based on Cao *et al*. (2005), the main problem arisen is the incomplete process data which resulting that the M&E establishment cannot be done. This problem can be settled by using the methods of structural decomposition approach and sum square error. Based on both methods, the first trial which use the value of pressure drop of 15 kPa has the highest possibility to represent the Cao system. With the complete process data in hand, future process analysis and improvement are possible to be done.

5.2 RECOMMENDATIONS

Based on Table 1.1, there are many unknown process data for the system. By applying the structural decomposition method and sum square error analysis, there are two ways of solution to solve the problem and converge the Cao *et al.* incomplete system. First solution, we can estimate the value at each stream by using the try-and-error analysis. However, by using this method, there will be too many parameters to be

considered during the analysis and calculation. That is why, it is easier to estimate the value of pressure drop at each cooler and heater units as been done in this study.

By applying this solution technique, it is highly recommended to set the value of pressure at Stream 1 as the degree of freedom, for example 1000 kPa in this study. The same value of pressure at Stream 1 is used for each trials to equalize the duty of the compressors. Also, it is recommended to set the outlet temperature of water-cooler 2 (WC2) around the value to the inlet temperature of compressor 1 (P1) as higher differences between this two values will give big effect to the accuracy of the power consumption calculation for the compressors.

REFERENCES

Archives of Industry News (2003). Petronas completes third LNG plant, The Star, April 23rd 2003.

Cao, W. S., Lu, X. S., Lin, W. S., and Gu, A. Z., (2005). *Parameter comparison of two small-scale natural gas liquefaction processes in skid-mounted packages*, Institute of Refrigeration and Cryogenics, Shanghai Jiao Tong University, Shanghai, China.

Chen, B. M., Lin, Z., and Shamash, Y., (2004). *Linear systems theory – a structural decomposition approach*, Copyright Birkhäuser, Boston, ISBN: 0-8176-3779-6.

Fredericks, C., Nasso, C., and Chenes (2007). E.D., Natural Gas Farmington Hills, MI, US: Thomson Gale.

Gavelli, F., Bullister, E., and Kytomaa, H. (2008). *Application of CFD (Fluent) to LNG spills into geometrically complex environments*, Cambridge Technology Development, Inc., United States.

Hubacek, K., and Muñoz, J. P., (2006). *Material implication of Chile's economic growth: Combining material flow accounting (MFA) and structural decomposition analysis (SDA)*, Institute of Environmental Science and Technology, Autonomous University of Barcelona, Spain.

Kidney, A. J., and Parrish, W.R., (2006). *Fundamentals of Natural Gas Processing*, Fluorida, US: CRC Press.

National Energy Technology Laboratory (2004). Natural Gas Facts, US Department of Energy

Okushima, S., and Tamura, M., (2007). *Multiple calibration decomposition analysis: Energy use and carbon dioxide emissions in the Japanese economy*, 1970-1995, School of Systems and Information Engineering, University of Tsukuba, Japan.

Rojey, A., Jaffrett, C., (1997). Natural Gas Production Processing Transport, eds., Paris, France: Editions Technip, ch. 1 and 13.

Shukri, Tariq., and Micheal Barclay, (2007). LNG Consultants, Foster Wheeler Energy, *Single mixed refrigerant process has appeal for growing offshore market*, Engineering Forum, LNG Journal, June 2007.

APPENDIX A

Calculation for the liquefaction rate:

In previous simulation, amount of liquefaction rate = 0.951

$$\text{Liquefaction rate} = \frac{\text{Flow rate of LNG}}{\text{Flow rate of NG}}$$

Given that the value for flow rate of NG is 4.0 kmol/h,
and value for flow rate of LNG in first trial is 3.837 kmol/h,

So, liquefaction rate for first trial is

$$= \frac{3.837 \text{ kmol/h}}{4.00 \text{ kmol/h}}$$

$$= 0.959$$

$$\% \text{ error} = \frac{0.959 - 0.951}{0.959} \times 100\%$$

$$= 0.83\%$$

APPENDIX B

Calculation for the load of water-cooling:

Total load of water-cooling in previous simulation = 145.95 kW

For first trial with pressure drop of 15 kPa,

Power consumption to load water-cooler 1, Q1 = 79.58 kW

Power consumption to load water-cooler 2, Q2 = 67.38 kW

So, total load of water cooling = Q1 + Q2

= 79.58 kW + 67.38 kW

= 146.96 kW

$$\% \text{ error} = \frac{146.96 - 145.95}{146.96} \times 100\%$$

$$= 0.68\%$$

APPENDIX C

Calculation for energy balance:

For heat exchanger 1,

C1 = C3 + H1,

C1 = $(3.924 \times 10^4$ kJ/h) x (1h/3600s)
= 10.9 kJ/s
= 10.9 kW

C3 = $(6.295 \times 10^5$ kJ/h) x (1h/3600s)
= 174.86 kJ/s
= 174.86 kW

H1 = $(6.673 \times 10^5$ kJ/h) x (1h/3600s)
= 185.36 kJ/s
= 185.36 kW

C3 + H1 = (-174.86 kW) + (185.36 kW) → negative value is referred to the cooling process

= 10.5 kW

% error = $\frac{10.9 - 10.5}{10.9} \times 100\%$

= 3.67%

APPENDIX D

Calculation for power consumption of compressors:

Total power consumption in previous simulation = 129.23 kW

For current simulation, in first trial:

Power consumption of compressor 1, P1 = 75.22 kW

Power consumption of compressor 2, P2 = 55.79 kW

Total power consumption of compressors = P1 + P2

= 75.22 kW + 55.79 kW

= 131.01 kW

$$\% \text{ error} = \frac{131.01 - 129.23}{131.01} \times 100\%$$

$$= 1.36\%$$

APPENDIX E

Calculation for power per unit LNG:

Power per unit LNG in previous simulation = 122.3 kW/mol/s

$$\text{Power per unit LNG} = \frac{\text{Total power consumption of compressors}}{\text{Flow rate of LNG}}$$

$$= \frac{131.01 \text{ kW}}{3.837 \text{ kmol/h}}$$

$$= 34.14 \text{ kW/kmol/h}$$

Conversion,

= (34.14 kW/kmol/h) x (1kmol/1000mol) x (3600s/1h)

= 122.904 kW/mol/s

$$\%\ \text{error} = \frac{122.904 - 122.3}{122.904} \times 100\%$$

$$= 0.49\%$$

APPENDIX F

Calculation for sum square error (SSE):

% error of liquefaction rate = 0.0083

% error of load of water-cooling = 0.0068

% error of energy balance, C1 = 0.0367
C2 = 0.0884

% error of power consumption of compressors = 0.0136

% error of power per unit LNG = 0.0049

$$SSE = (0.0083)^2 + (0.0068)^2 + (0.0367)^2 + (0.0884)^2 + (0.0136)^2 + (0.0049)^2$$

$$= 0.1587$$