WIRELESS LAPTOP ALARM SYSTEM

AZREE BIN MUSA

This thesis is submitted as partial fulfillment of the requirements for the award of the Bachelor Degree of Electrical Engineering (Electronics)

Faculty of Electrical & Electronics Engineering
Universiti Malaysia Pahang

NOVEMBER, 2007

Signature : _____

Author : AZREE BIN MUSA

Date : 23 November 2007

Dedicate to my beloved family and friends
Who always give me courage to finish this thesis.

Also, to those people who have been supportive through all this time.
Thank you for the kindness and advices that have been given.

God bless you all,-amin-

ACKNOWLEDGEMENT

With encouragement and determination, I would like to acknowledge those people who give all their effort help me to finish this project. This project will not come to the end without considerable ideas and support from them.

Firstly, I would like to thank my project supervisor; Mr. Fairuz Rizal b. Mohamad Rashidi, for providing the guideline with continues advices and feedback throughout the duration of finishing this project.

Secondly, I would also like to give appreciation to all other University Malaysia Pahang staff members especially Faculty of Electric and Electronic Engineering staffs that I may have called upon for assistance since the genesis of this project. Their opinions and suggestions have helped me in realizing this project. Also not to be forgotten, I would like to thank for all my friends with the support, valuable opinion and sharing ideas during the progress of this project.

Finally, I would like to thank to all my family and my colleagues members for their understanding, encouragement and support, towards the completion of my project.

Thank you Azree Musa

ABSTRACT

Self conformation system is one of the security system that develop quickly especially on properties security such as home, computer and so on. RFID become one of the conformation technologies that very useful and appropriate to design Wireless Laptop Alarm System. This system used data from the user card, user card will be scan to give the laptop owner's full permission to excess the laptop. The purpose of this project is to develop a system that can prevent thief problem for laptop users especially in University Malaysia Pahang (UMP). RFID system makes all the services that related with information become easier and safe. Microcontroller MC68HC11 is the main component or brain for the system and it will control by Assembly Language. Assembly program is design so that MC68HC11 be able to conform the data in the card, send the data to the computer and determine the flow of the system. Only user card that get conformation can execute the security application. Besides assembly program, this security system also develops by Visual Basic function. Visual basic function as a guard, it only allow the users to use the laptop if the card users is correct one. When users wish to used the laptop, users must have the right card with the right data. MC68HC11 will receive the data from RFID reader, than MC68HC11 shall filter and process the data. If the data is correct MC68HC11 will transfer the data to visual basic. When visual basic receives the data, laptop window will log in automatically and the users can use the laptop as desired.

ABSTRAK

Sistem pengesahan diri secara automatik adalah salah satu sistem keselamatan yang kian pesat membangun terutamanya keselamatan dari segi harta seperti rumah, komputer dan sebagainya. RFID merupakan salah satu teknologi pengesahan yang amat berguna dan sesuai digunakan untuk mencipta Sistem Penggera Komputer Riba Tanpa Wayar. Sistem ini menggunakan data yang dibawa oleh pengguna dan memeriksanya secara automatik sama ada pengguna mempunyai kebenaran untuk menggunakan komputer riba tersebut ataupun tidak. Tujuan utama projek ini dibangunkan adalah untuk mencegah daripada berlakunya masalah kecurian yang sering melanda pengguna komputer riba, terutamanya di Universiti Malaysia Pahang(UMP). Sistem RFID menjadikan semua perkhidmatan yang berkait dengan maklumat menjadi lebih mudah dan selamat. Motorola MC86HC11 ialah mikropengawal yang akan berfungsi sebagai otak utama yang akan mengawal sistem ini dengan menggunakan bahasa asembli. Program asembli direka supaya MC68HC11 dapat mengesah kad, menghantar data ke komputer dan menentukan aliran sistem. Hanya kad pengguna yang telah ditetapkan sahaja dibenarkan melaksanakan aplikasi keselamatan. Selain itu, system ini dicipta juga dengan menggunakan perisian Visual Basic. Perisian visual basic ini berfungsi sebagai pintu yang akan membenarkan pengguna menggunakan laptop sekiranya kad yang digunakan adalah betul. Apabila pengguna berhasrat untuk menggunakan laptop, pengguna perlu mempunyai kad dengan data yang betul. MC68HC11 akan menerima data daripada pembaca RFID. MC68HC11 kemudiannya akan menapis serta memproses data tersebut. Sekiranya data tersebut telah didaftarkan di dalam sistem, MC68HC11 akan menghantar data tersebut kepada VB. Apabila VB menerima data yang dihantar oleh MC68HC11, aplikasi keselamatan akan berfungsi iaitu window akan log in secara automatik, sekaligus membenarkan laptop digunakan.

TABLE OF CONTENTS

LIST OF TABLES

LIST OF FIGURES

LIST OF ABBREVIATIONS

VB	Visual Basic
MCU	Microcontroller Unit
RF	Radio Frequency
RFID	Radio Frequency Identification
RAM	Random Access Memory
GUI	Graphical Users Interface

LIST OF APPENDIXES

CHAPTER 1

INTRODUCTION

1.0 Background

Security system is widely used in various places such as at house resident and premises to secure their properties and also their safety at full time surveillance. Even the vehicles today have been installed with various security systems to avoid them from being taken away without the owner's permission. As the development of technology is advancing in every second has resulted a drastically changes in security system implementation such as the types of sensor and the microcontroller itself which can operate faster and efficiency.

Basically, the security system is design with combination of several sensors for detection of intrusion or any suspicious movement. This security system will be controlled by main control panel which can only be accessed by the administrator. A microcontroller is usually used to be placed as the main control panel of the security system.

Security system implementation approach depends on the area of the place and the types of security protection level needed such as at home residential, bank and portable device such as laptop. The development of the security system becomes more complex when the several of security level need to be implementing at the same place. In order to ensure the system has a high stability and flexibility, the programming which is developed to interact with the hardware must be efficient to response to the surrounding and free from interference. There are several essential

things need to be considered so that the security system has a high reliability and efficiency. One of major concern in design is microcontroller and its sensor.

The main objective in this final project is to develop and program a Wireless Laptop Alarm System using RFID. This system is a very valuable technology tool because nowadays there is no security system for laptop. The system also offers strategic advantages for security dependence because all the users' data can be stored in the RFID tag and can be protected against undesired read access and any manipulation. This is very important procedure to make sure the system is safe and can avoid strangers from access the laptop without permission.

Basically, this system consists of a RFID tag, RFID reader and a Motorola MC68HC11 controller that perform a serial communication interface to accomplish effective surveillance application system. To create the flow of the whole operation, assembly language for MC68HC11 is used. This system is quite efficient because it only allow one user to gain access with a secured method of RFID system at one time. This operation can be done by RFID Communication protocol before RFID reader send data to the microcontroller and proceed with a security application.

This system offers an advantage to the user because the user does not need to remember the password, does not need any maintenance because it only used a simple circuit and its friendly user because this system is portable so that it can carry anywhere. Wireless Laptop Alarm System can be relied on for excellent security system because through programming and specific hardware controller, only the specific user can have the permission to use the laptop or pc.

This system is divided into 6 modules:-

- RFID modules.
- Microcontroller module.
- Buzzer module.
- Visual Basic module.
- Sensor Module.
- Battery backup module

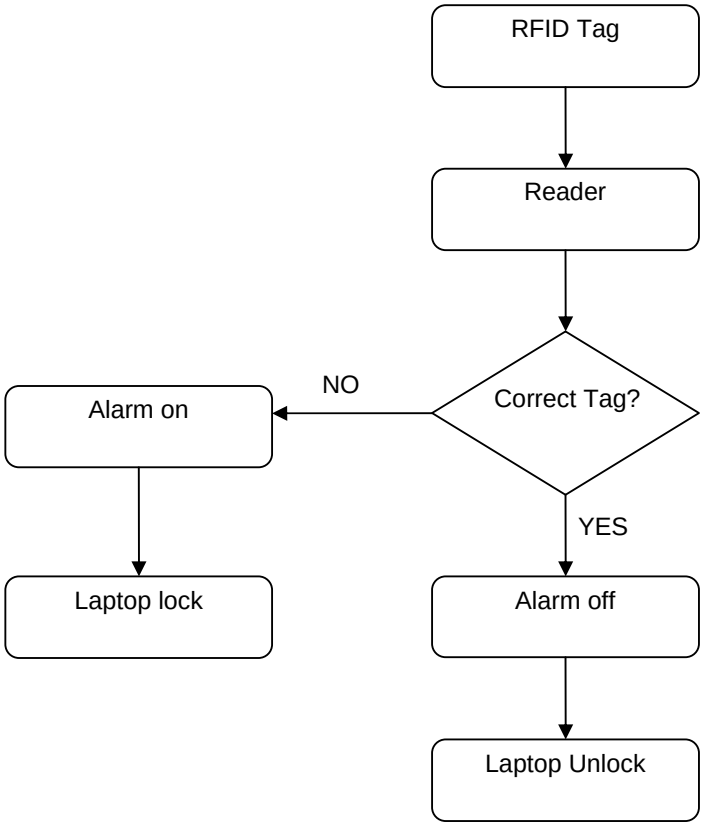

Figure 1.1: System flow for Wireless Laptop Alarm System

1.1 Objective

1.1.1 To investigate the function of RFID.

RFID is one of the new technologies for 21th century but the application for this device is quite slow. Wireless Laptop Alarm System is one of the RFID applications that can show RFID technology has the potential to eliminate human intervention. In addition, the advantages of develop a radio frequency identification (RFID) system is, it can reduce labor costs, fewer errors and increased system that used wireless.

1.1.2 To build up a security system that can prevent thief problem especially at student Hostel University.

Each semester we will heard a several case where the student laptop in UMP is missing. This problem become trauma to all UMP's student because laptop is an important device for them to do their task or assignment. Wireless Laptop Alarm System is devices that design especially to prevent laptop from keep missing. This system using RFID technology as a wireless device, its transmit data through the air using a certain frequency. RFID also is anti collision device, means that only one tag can be read at a certain time.

1.2 Project Scope

The main scope in this project is to design a wireless laptop security system using RFID as its main component which consists of a RFID reader and a tag communicating over the air at a certain frequency. Motorola MC68HC11 Controller Board, alarm system and password environment creates by visual basic is a security application features.

1.3 THESIS OVERVIEW

This Wireless Laptop Alarm System final thesis is a combination of 6 chapters that contains and elaborates specific topics such as the Introduction, Literature Review, Hardware Design, Software Design, Result, Discussion, Conclusion and Further Development that can be applied in this project.

Chapter 1 basically is an introduction of the project. In this chapter, the main idea about the background and objectives of the project will be discussed. The full design and basic concept of the project will be focused in this chapter. The overview of the entire project also will be discussed in this chapter to show proper development of the project.

Chapter 2 will be discussed about the security architecture and system operation for the development of the Wireless Laptop Alarm System. All component used in the project will discuss in this chapter.

Chapter 3 will be focused on hardware design of the Wireless Laptop Alarm System. Each module in this project has its own connection and condition that need to take under consideration. This chapter will discuss about this matter.

Chapter 4 will be discussed about the software development for Wireless Laptop Alarm System. In addition, flow chart for software development also shows in this chapter.

Chapter 5 discusses all the results obtained and the limitation of the project. All discussions are concentrating on the result and performance of the Wireless Access System. This chapter also discusses the problem and the recommendation for this project.

Chapter 6 discusses the conclusion and further development of the project. This chapter also discusses about new technology that can be implement in Wireless Laptop Alarm System, so that it can be more efficient. Other than that, overall cost and commercialization also discuss in this topic

CHAPTER 2

LITERATURE REVIEW

2.0 Introduction

Wireless Laptop Alarm System is security system design especially for laptop users. These systems consist of various modules:

- RFID modules.
- Microcontroller module.
- Buzzer module.
- Visual Basic module.
- Sensor Module.
- Battery backup module

All the modules are fully control by the microcontroller. To make sure the system efficiencies, each module have their own task and specialty. Below diagram show the overall system design for Wireless Laptop Alarm System:

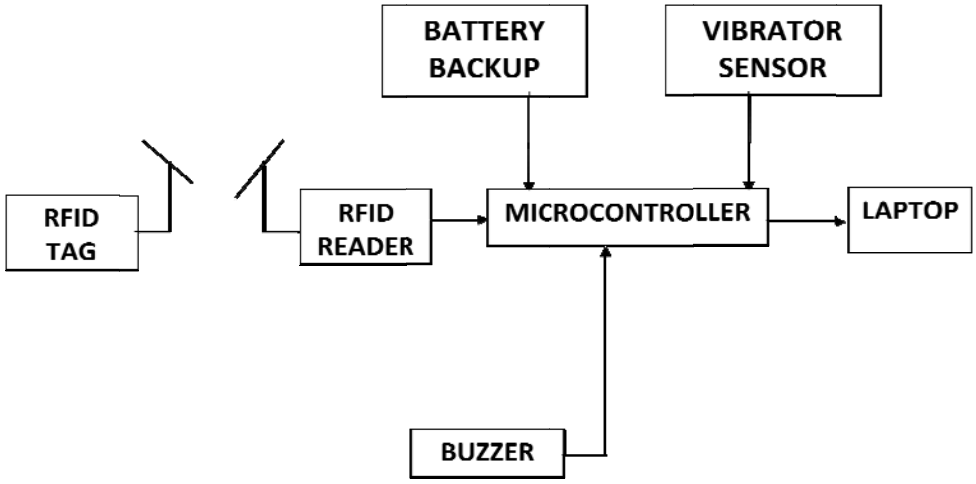

Figure 2.1: The overall system design for Wireless Laptop Alarm System

2.1 RFID Modules.

Frequency Identification or RFID is a device that involves detecting and identifying a tagged object through the data it transmits. Its requires a tag (a.k.a. transponder), a reader (a.k.a. interrogator) and antennae (a.k.a. coupling devices) located at each end of the system. The reader is typically connected to a host computer or other device that has the necessary intelligence to further process the tag data and take action. The coupling in most RFID systems is either electromagnetic (backscatter) or magnetic (inductive).

The method used in a particular implementation depends on the application requirements, such as the cost, size, speed, and read range and accuracy. Although hardware components are responsible for identifying and capturing data, software components of an RFID application are responsible for managing and manipulating the data transmitted between the tag and the reader and between the reader and the host computer.

RFID system transmit with 3 different level of frequency; low-frequency, high-frequency and very high-frequency. Low-frequency devices can only operating in 30 to 300 kHz and can be found in passive RFID. These types of RFID can only

be used in short-range application. Smart card and smart label application used high-frequency devices. Its operating frequency is about 3 to 30 MHz For very high-frequency devices, primarily used in highway toll-collection application, its operating frequency is 300MHz to 3GHz.

Below shows one type of RFID device that will used in the project:

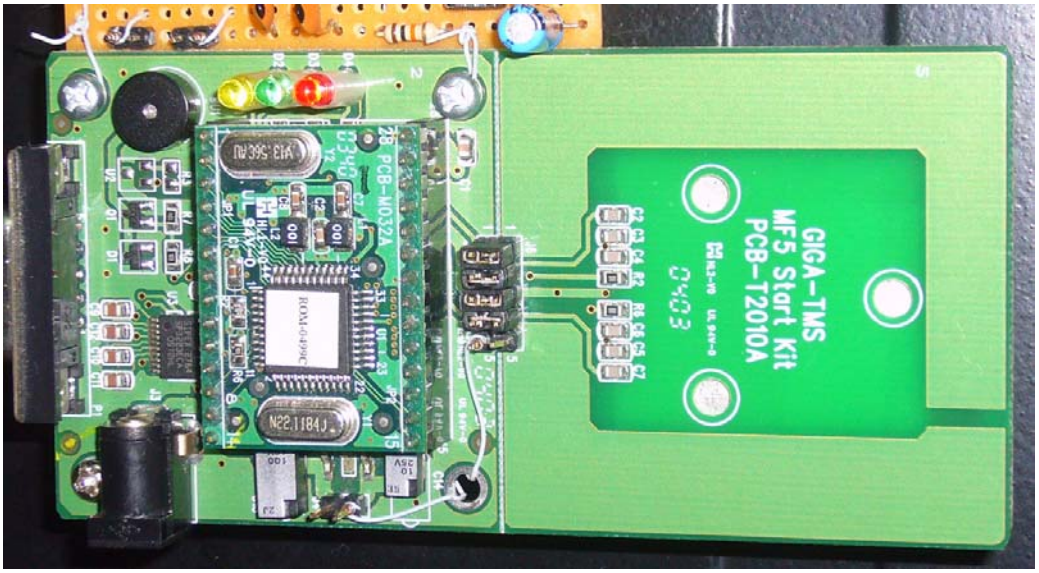

Figure 2.2: MF5 MIFARE® read / writes modules.

The PCR310 is a high performance passive RFID Mifare® card reader and writer. This multi-application cards can also be used with this read or write unit. PCR310 is designed for the applications of RFID technology for handy terminal or custom-built for system integrators. By using PCR310 reader or writer module and the encoder software, RFID users can implement their own applications and define security keys themselves.

This RFID is a true anti-collision device, design for a programmer who have card issues because it can used multiple card with the same type of card (ISO 14443A) depend on the programmer. With operating frequency 13.56 MHz and RF distance approximately 2cm, it can offer faster data transfers and high data integrity. In addition, it required only 5V dc power to operate and have 32 kb internal memory.

PCR310 comes with 2 different versions, PCR310U: USB interface and PCR310R: RS232 interface.

Figure 2.3: MF5 MIFARE® tag.

Smart cards as shown in the figure 2.3 is one of RFID tag that can be used as excess control, security and personal identification such as passport, visas, driver's licenses and even I.D cards. The international organization knows as *Subcommittee 17 (SC17)* is an organization that responsible to develop standards for identification cards and for personal identification. The committee has standardized the smart cards with through various ISO committees, including ISO 10536 (close-coupling smart cards), ISO 14443 (proximity-coupling smart cards) and ISO 15693 (vicinity-coupling smart cards).

PCR310u provide a card that's in ISO 14443 committees, also known as proximity-coupling smart card. Maximum operating distance for this type of card is only 10 inches long and the transponders gets power from 13.56MHz alternating magnetic field generated by the reader.

The ISO 14443 separated with 2 standards, ISO 14443 types A and ISO 14443 type B. In most cases proximity-coupled smart cards support one or the other; reader, one the other hand, must support both and that required reader be able to alternating between the two recognizes polling standards during WAIT FOR COMMUNICATION FROM THE TRANSPONDER idle period. Reader cannot,

however, switch between the standards during ongoing transmission session with the device.

ISO 14443 types A cards rely on 100 percent Amplitude Shift Keying (ASK) as their signal modulation mechanism for card-to-reader transmission. The bidirectional data transmission rate is 106 kbps.

2.2 Microcontroller Module

2.2.1 MC68HC11

Figure 2.4: The MC68HCA1

The microcontroller MC68HC11A1 is a high performance 8-bit microcontroller units (MCUs) base on the MC68HC11 family. It uses the HCMOS technology to produce faster and small controller with less power consumption and high tolerance for noisy signal. This high speed, low power consumption chips have multiplexed buses and a fully static design. The chips can operate at frequencies from 3 MHz to dc.

This microcontroller offers a lot of features than other microcontroller in MC68HC11 family. It has its own CPU, power saving stop and wait modes features, 8 Kbytes ROM, 512 Bytes on-chip EEPROM, 256 bytes of on-chip RAM, 16 bit timer system, 8 bit pulse accumulator, real time interrupt circuit, COP watch dog system, synchronous serial peripheral interface (SCI), asynchronous no return to zero SCI, 8-channel, 8 bit ADC and 38 general purpose I/O pins.

In MC68HC11, the programming used in this microcontroller is assembly language. This language is upward compatible, means that the latest version of MC68HC11 family can run program from the old version of MC68HC11 family but the old version of MC68HC11 family cannot run program from the latest version MC68HC11 family.

Figure 2.5: 48-pin DIP pin assignment

MC68HC11 have 4 modes operation, bootstrap mode, special test mode, expanded-multiplexed mode and single-chip mode. In bootstrap mode, all the programs are place into the RAM, whereas, special test is used by manufacturer to test the chip in factory, so this mode only can be used manufacturer. Single chip operation by using internal memories and expanded-multiplexed is mode where users

can expand memory and I/O lines by uses the port B and port C as an address and data buses. All mode of operation is determined by status MODA and MODB pins during RESET operation.

Ports in MC68HC11 are multiplexed; that is each port offers various function with each port perform one task at one time.

PORT	FUNCTION
A	Parallel I/O or timer/counter
B	Output port or upper address (A8-A15) in expanded mode.
C	I/O port or lower address (A0-A7) and data bus (D0-D7) in expanded mode.
D	6 bits I/O port or serial communication interface (SCI) and serial peripheral interface (SPI)
E	Input port or 8-cahnnels input analog for ADC

Table 2.1: Port and Function Table

Latest version of MC68HC11 family such as version F has port F and G and low cost version such as D version only has port A, B, C and D.

2.2.2 MAX 233

Max233 is a 5V powered, multichannel RS-232 drivers or receiver. These parts are especially useful in battery-powered systems, since their low-power shutdown mode reduces power dissipation to less than 5µW. These devices use no external components and are recommended for applications where printed circuit board space is critical.

This device is chosen because it contains four features: dual charge-pump DC-DC voltage converters, RS-232 drivers, RS-232 receivers and receiver and transmitter enable control inputs.

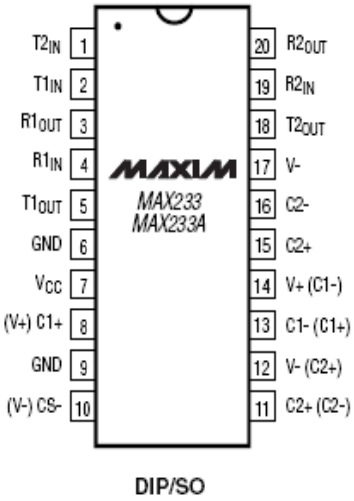

Figure 2.6: MAX233 pin configuration

Some of the application that can be done using this I.C's is portable computer, lower power modem, interface translation, battery-powered RS-232 system and multidrop RS-232 networks.

2.2.3 DB9

Figure 2.7: DB9 connector male n female

DB9 also known as the D-subminiature or D-sub is a common type of electrical connector used particularly in computers. It is one of the largest common connectors used in computer after USB.

A DB9 contains two parallel rows of pins or sockets usually surrounded by a D-shaped metal shield that provides mechanical support and some screening against electromagnetic interference. The D shape guarantees correct orientation. The part containing pin contacts is called the *male connector* or *plug*, while that containing socket contacts is called the *female connector* or *socket*. The socket's shield fits tightly inside the plug's shield. The shields are connected to the overall screens of the cables (when screened cables are used), creating an electrically continuous screen covering the whole cable and connector system.

DB9 usually used for RS-232 serial communication interface (SCI). A male DE9 connector on the back of an IBM-PC-compatible computer is typically a serial port connector. IBM introduced the DE9 connector for RS-232 on PCs with the Personal Computer AT in 1984. A female 9-pin connector on the same computer may be a video display output: monochrome, CGA, or EGA. Even though these all use the same connector, the displays cannot all be interchanged and monitors or video interfaces may even be damaged if connected to an incompatible device using the same connection.

2.3 Buzzer Module

Figure 2.8: Buzzer

In this system, buzzer act as indicator to make sure only the right user's can used the laptop. This buzzer is chosen because it can operate with low voltage and current. The buzzer gets supply from the microcontroller to trigger.

2.4 Visual Basic Modules

The Visual Basic Programming System encompasses a set tools and technologies that are being used by more than three million developers worldwide to create computer software component and application.

In this project, visual basic is used to receive data from the microcontroller serially so that the security application for Laptop can be implement.

The way that a program accepts instructions from the user presents results is called the user interface. Today, most application has a graphical user interface (GUI). A graphical user interface (GUI) provides visual clues such as small picture, or icons, to help the end user give instruction to the computers. Microsoft Windows is most widely used graphical user interface for personal computers

2.5 Sensor Module

Figure 2.9: Vibrator sensor

Vibration sensor is used to indicate the present of the laptop thieves in idle mode or when the user is not using the laptop for a quite some time. The concept of operation for this sensor is similar to the switch, only it will trigger automatically if its sense a vibration from the laptop.

2.6 Battery Backup Module

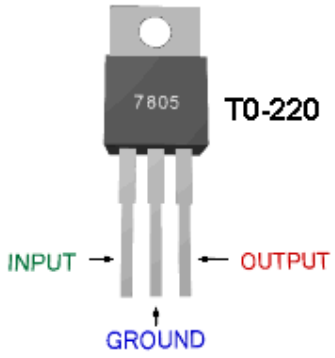

Figure 2.10: 7805 IC voltage regulators

Voltage regulator comprises a class of widely used ICs. Regulator units contain the circuit for reference source, comparator amplifier, control device and overload protection all in a single IC.

The series 78 regulators provide fixed regulated voltage 5V to 24V dc. Figure 2.10 shows the figure of fixed 5V voltage regulator. This type of voltage regulator employs internal current limiting, thermal shut down and safe operating area protection, making it essentially indestructible. If adequate heat sinking is provided, they can deliver over 1A output current. Although designed primarily as fixed voltage regulators, these devices can be used with external components to obtain adjustable voltages and currents.

CHAPTER 3

HARDWARE DESIGN

3.0 Introduction

This chapter will discuss about designing hardware for Wireless Laptop Alarm System, the circuitry that need to be connected and what's the important aspect that need to take under consideration. All the component has been described in the previous chapter will discuss again in this chapter but in more schematic ways.

3.1 Microcontroller Module

This module will describe about how the basic connection for Motorola MC68HC11A1 are being made. The diagram below shows the basic circuits that need to be connected with the microcontroller MC68HC11A1. There's four circuit that need to attach with microcn6roller in order to use bootstrap mode, the circuit is, power circuit, clock circuit, reset circuit and RS232 / EIA232 circuit.

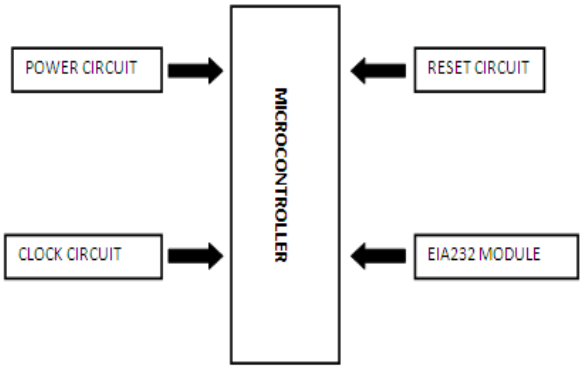

Figure 3.1: The basic circuit needed in bootstrap mode

3.1.1 Bootstrap Mode

Bootstrap mode is one of the mode that 68HC11 offers. It has internal memory portions of the 64K address space, the small on-chip ROM at address $BF40-$BFFF, RAM at address $00-$FF and internal EEPROM at address $B600-$B7FF where the entire program is written to.

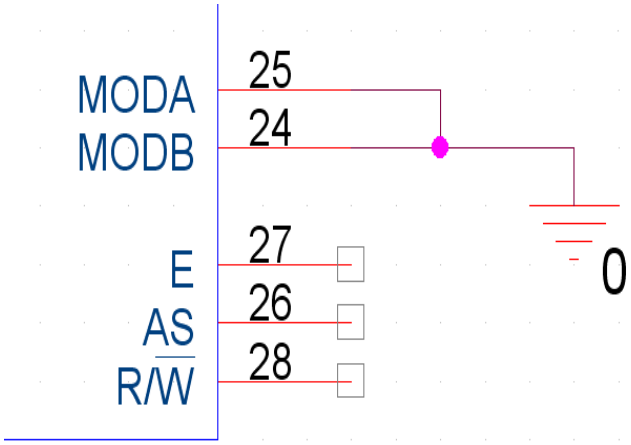

Figure 3.2: Microcontroller connection

Try to remember, to use bootstrap mode, MODA and MODB need to get logic 0, like shows at the figure above. This is very important because modes of operation are determined by status MODA and MODB pins during RESET

operation. If MODA and MODB don't get logic zero during reset operation, the microcontroller circuit can be initializing but the program cannot be downloading into microcontroller by the software.

3.1.2 Power Circuit

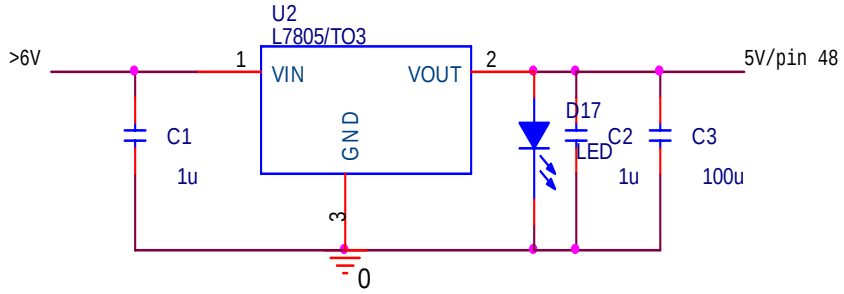

Figure 3.3: Power circuit

Figure above show the circuit for the power supply, these power supply will provide power for almost all the device in this project especially microcontroller. An unregulated input voltage V_i is filtered by capacitor C_1 and connected to the IC's VIN terminal. The IC's VOUT terminal provide a regulated 5V with ±5%, which is filtered by capacitor C_2 and C_3, The third IC terminal is connected to ground (GND).

The condition that need to be consider in this power circuit is, input voltage must be bigger than 6V so that the desire output voltage will sustain and make sure the voltage regulator output must within 5V ± 5% otherwise the microcontroller will not functioning.

3.1.3 Reset Circuit

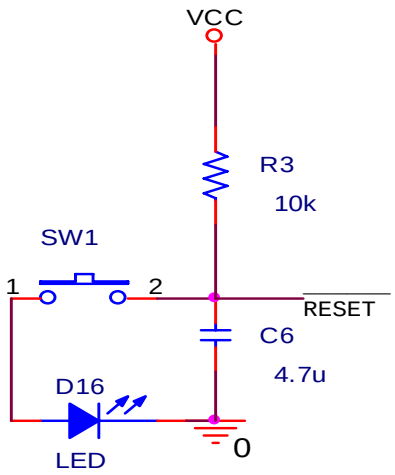

Figure 3.4: Reset circuit

Reset circuit is a circuit that used to reset program in microcontroller. This circuit consists of resistor 10K, reset button and capacitor 4.7uF. Reset pin in microcontroller is active low, so to trigger it, 5V supply is needed. When the reset button is push, the reset pin will get logic 0 and the reset program in the microcontroller will active.

LED connects with reset circuit works as indicator. When reset button is push, the LED will turn on to tell users reset circuit is functioning a program in the microcontroller maybe reset.

3.1.4 Clock Circuit

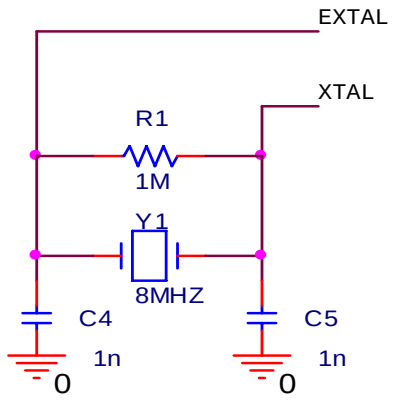

Figure 3.5: Clock circuit

The function of a clock circuit (also known as oscillator circuit) is to provide an accurate and stable periodic clock signal to a microcontroller. EXTAL and XTAL are used to connect crystal to internal clock circuit to generate clock for the CPU to operate.

The internal clock frequency is one-fourth of that supplied to the crystal pins. A typical system designed for maximum clock frequency uses an 8MHz crystal. Hence the clock speed (frequency) is 2MHz. This clock is often referred to as the system clock or E clock. When the E clock output is low, an internal process is taking place. When it is high, the MCU is writing or reading data.

3.1.5 EIA232 Module

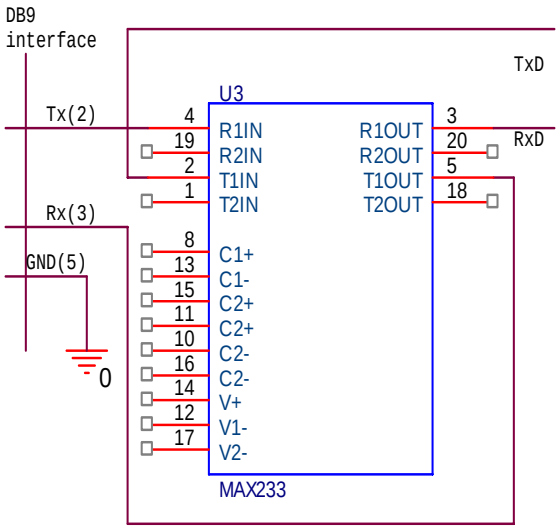

Figure 3.6: RS232 connection

IC MAX233 used to interface the microcontroller with the pc and RFID reader. The purpose for this interfacing is to initialize the microcontroller circuit, download the programming into the microcontroller and to receive data from RFID reader.

DB9 connection is used because it's point to point serial communication and easy to used. Figure below shows the pin explanation for DB9; only 3 connections are needed for microcontroller and RFID interfacing, Pin 2 as transmit pin, Pin 3 as receiver pin and Pin Gas ground pin.

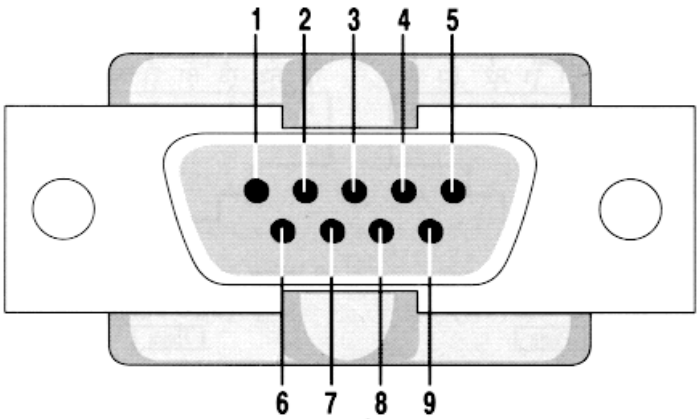

Pin	Signal	Pin	Signal
1	Data Carrier Detect	6	Data Set Ready
2	Received Data	7	Request to Send
3	Transmitted Data	8	Clear to Send
4	Data Terminal Ready	9	Ring Indicator
5	Signal Ground		

Figure 3.7: Pin assignment for DB9

WP11 is software that has the responsibility to initialize and download the programming into the microcontroller. It's a window program that is used to program 68HC11 microcontroller by controlling hardware that supports the special bootstrap mode of this device. WP11 uses a serial port to communicate with the programming hardware, which can be any circuit that uses the HC11 special bootstrap mode.