UNIVERSITI MALAYSIA PAHANG

BORANG PENGESAHAN STATUS TESIS ◆

JUDUL: DEVELOPMENT OF THE CAN CRUSHER MACHINE

SESI PENGAJIAN: 2008/2009

Saya, CHE M0HD AKHAIRIL AKASYAH B CHE ANUAR (881010-03-6131)

mengaku membenarkan tesis Projek Tahun Akhir ini disimpan di perpustakaan dengan syarat-syarat kegunaan seperti berikut:

1. Tesis ini adalah hakmilik Universiti Malaysia Pahang (UMP).
2. Perpustakaan dibenarkan membuat salinan untuk tujuan pengajian sahaja.
3. Perpustakaan dibenarkan membuat salinan tesis ini sebagai bahan pertukaran antara institusi pengajian tinggi.
4. **Sila tandakan (√)

[ ]	**SULIT**	(Mengandungi maklumat yang berdarjah keselamatan atau kepentingan Malaysia seperti yang termaktub di dalam AKTA RAHSIA RASMI 1972)
[ ]	**TERHAD**	(Mengandungi maklumat TERHAD yang telah ditentukan oleh organisasi / badan di mana penyelidikan dijalankan)
[√]	**TIDAK TERHAD**	

Disahkan oleh:

_____ (TANDATANGAN PENULIS)

_____ (TANDATANGAN PENYELIA)

Alamat Tetap:

No 55 FELDA Chiku 2
18300 Gua Musang
Kelantan

Zulkifli b Ahmad @ Manap

Tarikh: **13 NOVEMBER 2008**

Tarikh: **13 NOVEMBER 2008**

CATATAN: * Potong yang tidak berkenaan.

** Jika tesis ini SULIT atau TERHAD, sila lampirkan surat daripada pihak berkuasa/organisasi berkenaan dengan menyatakan sekali tempoh tesis ini perlu dikelaskan sebagai SULIT atau TERHAD.

◆ Tesis dimaksudkan sebagai tesis bagi Diploma secara penyelidikan atau disertai bagi pengajian secara kerja kursus.

DEVELOPMENT OF THE CAN CRUSHER MACHINE

CHE MOHD AKHAIRIL AKASYAH B CHE ANUAR

Report submitted in partial fulfillment of the requirements
for the award of Diploma in Mechanical Engineering

Faculty of Mechanical Engineering
UNIVERSITI MALAYSIA PAHANG

NOVEMBER 2008

SUPERVISOR DECLARATION

"I declare that I have read this thesis and in my opinion, this thesis is enough to fulfill the purpose for the award for the Diploma of Mechanical Engineering from the aspects of scope and quality."

Signature : ……

Supervisor : EN. ZULKIFLI B AHMAD @ MANAP

Date :

STUDENT DECLARATION

I declare that this report entitled *"Development of the Can Crusher Machine"* is the result of my own research except as cited in the references. The report has not been accepted for any degree and is not concurrently submitted in candidature of any other degree.

Signature : ……

Name : CHE MOHD AKHAIRIL AKASYAH B CHE ANUAR

ID Number : MB06007

Date :

ACKNOWLEDGEMENTS

Alhamdulillah, I would like to express my thankfulness to Allah s.w.t to giving me all the strength in fulfilling and completely this final year project. All the praise and blessing be upon Prophet Muhammad s.a.w. I would like to thank to those who had been involved whether directly or in directly in helping me to complete my final year project. It could not have been written and produced without the help of many people.

Special appreciation is goes to my lovely parents, Mr. Che Anuar b Che Muhammad and Mrs. Normah binti Hassan. Not forgotten to my family who gave support at all times. My appreciated is also extended to Mr. Zulkifli b Ahmad @ Manap who acts as my supervisor. Thank for supervision and encouragements. I also would like to thank all my friend who always been listening my problems during the period to finish this dissertation. All your kindness is very much appreciated.

ABSTRACT

Designing and fabrication the can crusher machine is a product that fulfills the customer needs. This project uses many materials such as sheet metal, hollow steel bar and others. Overall, this project involves many processes, starting from the design concept, fabrication and assembling procedures. Even though there are many types of the can crusher machine in the market, the completion of this new model provides a more practical usage.

ABSTRAK

Meraka bentuk dan membuat mesin pengemik tin merupakan salah satu produk untuk kepentingan pengguna. Projek ini meggunakan pelbagai jenis bahan seperti kepingan besi, besi berongga dan sebagainya. Keseluruhan projek ini melibatkan berbagai-bagai proses bermula dengan idea konsep rekabentuk, pemotongan bahan, mereka bentuk dan fabrikasi. Walaupun mesin pengemik tin seperti ini telah banyak di pasaran, namun kelainan dalam penyelesain produk ini telah dilakukan bagi memastikan ianya lebih praktikal untuk digunakan.

TABLE OF CONTENTS

2 LITERATURE REVIEW

LIST OF TABLES

LIST OF FIGURES

LIST OF APPENDICES

CHAPTER 1

INTRODUCTION

1.1 PROJECT SYNOPSIS

This project contains of designing and fabrication of can crusher machine. There have many differences between this can crusher with current design in market place. This project is to develop and improving it performance as well so that there has no doubt about the design and concept. This design required little forces to crush the aluminum cans, can crush a can at a time. In this project, it needs lot of skills and information and also knowledge such as Computer Aided Design software (AutoCad), Solidworks software, using shearing machine, Truma Bend V Series (bending machine), vertical bendsaw, bench work and welding process. This design obviously would help the user. So, this design would through much process before it get into prototype term in order to achieve the objectives and off course customer need.

1.2 PROJECT PROBLEM STATEMENT

Usually we use leg to stamp the cans. This method is very dangerous because can make injure for us, but nowadays many can crusher was produce. But most of the current product was attached at the wall. So the current product is not portable. Then the current products are troublesome and difficult because it make user feel not suitable as well. Beside that most of products also not have hopper to prepare the can before crush and not have storage for the crushed cans.

1.3 PROJECT OBJECTIVES

1.3.1 General Objective

Diploma final year project objectives is to practices the knowledge and skill of the student that have been gathered before solving problem using academic research, to born an engineer that have enough knowledge and skill. This project also to complete the subject on this semester. The student also can be explore the advanced machine before involves in industries. The project otherwise will be produce and train student capable of doing work with minimal supervisory and more independent in searching, detailing and expanding the knowledge and experiences. The project also will generate student that have capability to make a good research report in thesis form technical writing.

1.3.2 Specific Project Objective

This project will be following these objectives;

i. To design and fabricate the can crusher that required low force to crush the cans.
ii. To design and fabricate the can crusher that can crush a can at a time a.
iii. To design and fabricate the can crusher that has storage to locate the can after crush.

1.4 PROJECT SCOPE

In order to finish this project require precise scope of work and proper plan need to be followed because this project must through various process before it would be produce. Beside that this project title is new idea which is come from instructor engineer in lab and as the knowledge isn't entirely covered in classes or lab. So it give us advantages to learn new process to produce this product and absolutely we could find lot of advantages neither we are realized or not. These are scope of work in this project:-

i. Literature review about the design from any possible resource
ii. Design the model of can crusher
iii. Fabricate the design using material that been selected
iv. Test the design in demonstration

1.5 PROJECT PLANNING

This project is beginning with meet supervisor to collect information and otherwise search from via internet, books and survey at market, this literature review must do for every week. The finding of information not will be stop on a week but continues along the way of this project because to get more information.

The Gantt chart (time management) and flow chart (process management) will be developing on second week. This is done using Microsoft Excel using Gantt chart system.

The week second and third, have to make three sketching. These sketching based on the advantages and disadvantage product in marketing.

The Fourth week the Pugh analysis and matrix analysis will be developing. The function of this analysis is to get a final design, from three designs any criteria will be research to get good concept. After get a final design solid work will be start.

Just final design will use this software. Each part will be developed and lastly the assembly part will be begun.

On weeks fifth and sixth the progress report will be start. Meeting with supervisor on weeks seventh and eight gather data to complete progress report. That week the mid presentations also start.

The getting material will be start after mid presentation. The process cutting raw materials start on week nine. At the same time the fabrication also starts. The planning process of fabrication around week’s nine until twelve.

After finish the process fabrication, the final report will be start. To complete the report I will use format thesis 2008.The last presentation will be started on week fourteen.

GANTT CHART

Project Activities		Week 1	2	3	4	5	6	7	8	9	10	11	12	13	14
Briefing about PTA by the lecturer	*Plan*														
	Actual														
Choose the Project that listed	*Plan*														
	Actual														
Project been given and start meet the supervisor	*Plan*														
	Actual														
Do some literature review and gather information	*Plan*														
	Actual														
skecthing 3 concept, gantt chart	*Plan*														
	Actual														
Develop matrix pugh and solid work	*Plan*														
	Actual														
Making progress report	*Plan*														
	Actual														
Show progress report to supervisor	*Plan*														
	Actual														
Present for work progress	*Plan*														
	Actual														
Get material and start fabricate	*Plan*														
	Actual														
project complete and start final report	*Plan*														
	Actual														
Present the Final Year Project	*Plan*														
	Actual														

Table 1: Gantt chart

CHAPTER 2

LITERATURE REVIEW

2.1 INTRODUCTION

The purpose of this chapter is to provide a review of product in market. I will make a comparison of other product in market. Substantial literature has been studied on advantages and disadvantages of that product. However, little information can be found on integrated durability evaluation methods. The example of evaluation I will be develop is Pugh analysis and matrix analysis. The below is some product in market.

2.2 PRODUCT REVIEW

Study about the current design is important in order to determine what the product function really are and find out how it perform and getting out it advantages for each and then compare with other product that been review already. In this process, it is decided to study about three current designs in market now in order to gain information that could help me created my new design as well.

2.2.1 Foot Operated Can Crusher

Figure 2.1: Foot Operated Can Crusher

- Advantages

  i. Suitable for both steel and aluminum cans
  ii. Reduces cans by up to 85%
  iii. Slip and non marking feet
  iv. Sturdy all metal construction
  v. Suitable for cans up to 500ml

- Disadvantages

  i. No hopper
  ii. No have container to storage the crushed cans
  iii. Need more time to crush many cans

2.2.2 Can Crusher Bin Single Pack

Figure 2.2: Can Crusher Bin Single Pack

- Advantages

  i. Crushes and self-ejects standard aluminum cans
  ii. Stores more than 400 cans and conveniently fits into small spaces
  iii. Hand operated crusher allows you to crush can with easy

- Disadvantages

  i. No hopper
  ii. Need more time to crush many cans
  iii. Heavy
  iv. High force need to operate

2.2.3 6-Can Aluminum Can Crusher

Figure 2.3: 6-Can Aluminum Can Crusher

- Advantages

  i. Have hopper
  ii. Can crushed 6 can at a times
  iii. Little force need to operate

- Disadvantages

  i. Not portable
  ii. Not have storage

2.2.4 Easy Pull Can Crusher and Storage System

Figure 2.4: Easy Pull Can Crusher and Storage System

- Advantages

  i. Can crush aluminum can
  ii. Easy to operate
  iii. Convenient removable space saving Collection Bin that holds 48 cans
  iv. Along with child safety stops
  v. Clean, safe, easy to operate, and attractive

- Disadvantages

  i. Not portable
  ii. Not have hopper

2.3 CNC SHEARING MACHINE

Figure 2.5: CNC shearing machine

Shearing is a process for cutting sheet metal to size out of a larger stock such as roll stock. Shears are used as the preliminary step in preparing stock for stamping processes, or smaller blanks for CNC presses. During the shearing process, an upper blade and a lower blade are forced past each other with the space between them determined by a required offset.

Material thickness ranges from 0.125 mm to 6.35 mm (0.005 to 0.250 in). The dimensional tolerance ranges from ±0.125 mm to ±1.5 mm (±0.005 to ±0.060 in). The shearing process produces a shear edge burr, which can be minimized to less than 10% of the material thickness. The burr is a function of clearance between the punch and the die (which is nominally designed to be the material thickness), and the sharpness of the punch and the die.

The illustration at next page had shown a two-dimensional look at a typical metal shearing process. Note how the upper shear blade fractures the metal workpiece held in place by the work holding devices. The sheared piece drops away.

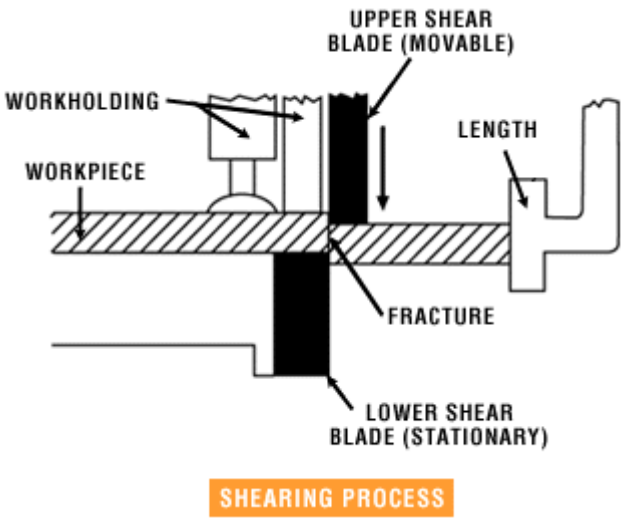

Figure 2.6: Shearing process features

Typically, the upper shear blade is mounted at an angle to the lower blade that is normally mounted horizontally. The shearing process performs only fundamental straight-line cutting but any geometrical shape with a straight line cut can usually be produced on a shear. Metal shearing can be performed on sheet, strip, bar, plate, and even angle stock. Bar and angle materials can only be cut to length. However, many shapes can be produced by shearing sheet and plate.

Materials that are commonly sheared include:

i. Aluminum
ii. Brass
iii. Bronze
iv. Mild steel
v. Stainless steel

2.4 DRILLING

2.4.1 Introduction

A drill is a tool with rotating drill bit used for drilling holes in various materials. Drills are commonly used in woodworking and metalworking. The drill bit is gripped by a chuck at one end of the drill, and is pressed against the target material and rotated. The tip of the drill bit dose the work of cutting into the target material, slicing off thin shaving (twist drills or auger bits) or grinding off small particles (oil drilling)

2.4.2 Hammer Drill

The hammer drill is similar to a standard electric drill, with the experience that is provided with a hammer action for drilling masonry. The hammer action maybe engaged or disengaged as required. The hammer action is cheap but delicate. It uses two cam plates to make chuck accelerate towards to the work. However because of the relative masses of the chick bit and the remainder of the drill the energy transfer is inefficient and will fail to penetrate harder materials and vibrates the operator’s hand. The cams were fast. Compare this to a rotary/ pneumatic hammer drill where just the bit is accelerate to the work is sucking the bit inwards.

Large cam hammer drills, especially transverse motor, are crude in their action. The energy delivered in each stroke is highly variable. The cheaper drill will smash its way through the work and vibrate the surroundings which can cause lots of collateral damage.

Figure 2.7: A hammer drill

2.4.3 Drill Press

A drill press (also known as pedestal drill, pillar drill, or bench drill) is a fixed style of drill that may be mounted on a stand or bolted to the floor or workbench. A drill press consists of a base, column (or pillar), table, spindle (or quill), and drill head, usually driven by an induction motor. The head has a set of handles (usually 3) radiating from a central hub that, when turned, move the spindle and chuck vertically, parallel to the axis of the column. The table can be adjusted vertically and is generally moved by a rack and pinion however, some older models rely on the operator to lift and reclamp the table in position. The table may also be offset from the spindle's axis and in some cases rotated to a position perpendicular to the column. The size of a drill press is typically measured in terms of swing. Swing is defined as twice the throat distance, which is the distance from the center of the spindle to the closest edge of the pillar. For example, a 16-inch (410 mm) drill press will have an 8-inch (200 mm) throat distance.

A drill press has a number of advantages over a hand-held drill:

i. less effort is required to apply the drill to the work piece. The movement of the chuck and spindle is by a lever working on a rack and pinion, which gives the operator considerable mechanical advantage.

ii. the table allows a vise or clamp to position and lock the work in place making the operation much more secure.

iii. the angle of the spindle is fixed in relation to the table, allowing holes to be drilled accurately and repetitively.

Speed change is achieved by manually moving a belt across a stepped pulley arrangement. Some drill presses add a third stepped pulley to increase the speed range. Modern drill presses can, however, use a variable-speed motor in conjunction with the stepped-pulley system a few older drill presses, on the other hand, have a sort of traction-based continuously variable transmission for wide ranges of chuck speeds instead, which can be changed while the machine is running.

Figure 2.8: Drill press

2.5 VERTICAL BANDSAW

Figure 2.9: A vertical bandsaw

2.5.1 Introduction

Vertical band saws, also known as contour saws, perform metal removal jobs that save time and material. Large sheets and bars of material can be cut to size or shape without creating too many chips in a short period of time. Most materials, from wood and plastics to aluminum and steel, can be cut on the two band saws in the shop. Certain metals require specific saw bands in order to be cut, so check with someone in the shop before cutting steels or hardened materials.

2.5.2 Powermatic Bandsaw

This bandsaw is used for cutting steel and stainless steel. The other band saw in the shop should not be used to cut these harder materials.

2.5.3 The Controls

-starts/stop
-high / low range
-bandsaw speed

2.5.3.1 Start s/stop

The green button will start the bandsaw, the red button will stop it. The bandsaw will coast to a stop, so wait until the blade has stopped moving before removing your part or scrap pieces from the table.

1) High / low range

The bandsaw has a high speed and low speed gear that can be changed with this lever. The bandsaw must be stopped before attempting to change the range.

2) Bandsaw Speed

The speed of the bandsaw may also be changed with this hand wheel. The bandsaw must be running to adjust the variable speed.

2.6 GAS METAL ARC WELDING (GMAW)

2.6.1 Introduction

Welding is a fabrication process that joins materials, usually metals or thermoplastics, by causing coalescence. This is often done by melting the work pieces and adding a filler material to form a pool of molten material that cools to become a strong joint. This is in contrast with soldering and brazing, which involve melting a lower-melting-point material between the work pieces to form a bond between them, without melting the work pieces.

The method joining that able to fabricate and assembled the can crusher is Metal Inert Gas (MIG) welding. The equipment used in GMAW is a welding gun; a wire feed unit, an electrode wire and a shielding gas supply. When the control switch is turned on the wire feed, electrical power and gas flow are initiated. This causes an electric arc to be struck. The gas nozzle is used to direct the welding gas evenly into the welding zone.

The **Figure 2.10** below shows the basic structure of MIG nozzle

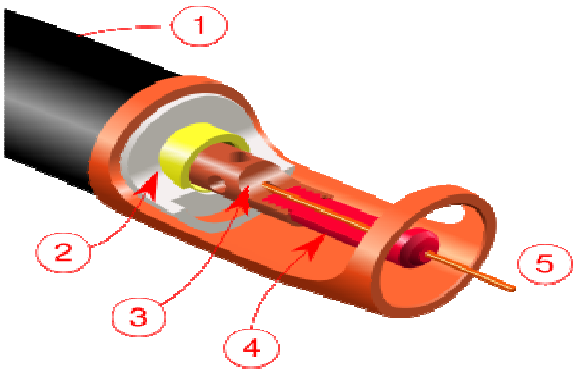

Figure 2.10: Basic Structure of MIG Nozzle

(1) Torch Handle (2) Molded phenolic dielectric (3) shielding gas nozzle (4) Contact tip (5) Nozzle output fac

To perform gas metal arc welding, the basic necessary equipment is:

i. a welding gun
ii. a wire feed unit
iii. a welding power supply
iv. an electrode wire
v. a shielding gas supply

2.6.2 MIG Welding Benefit

i. All position capability
ii. Higher deposition rates than SMAW
iii. Less operator skill required
iv. Long welds can be made without starts and stops
v. Minimal post weld cleaning is required

2.7 RIVET

2.7.1 Introduction

A rivet is a mechanical fastener. Before it is installed it consists of a smooth cylindrical shaft with a head on one end. The end opposite the head is called the buck-tail. On installation the rivet is placed in a pre-drilled hole. Then the tail is "upset" (i.e. deformed) so that it expands to about 1.5 times the original shaft diameter and holds the rivet in place. To distinguish between the two ends of the rivet, the original head is called the factory head and the deformed end is called the shop head or buck-tail.

Because there is effectively a head on each end of an installed rivet it can support tension loads (loads parallel to the axis of the shaft); however, it is much more capable of supporting shear loads (loads perpendicular to the axis of the shaft). Bolts and screws are better suited for tension applications.

Fastenings used in traditional wooden boat building like copper nails and clinch bolts work on the principle of the rivet but they were in use long before the term rivet was invented. So, where they are remembered, they are usually classified among the nails and bolts respectively.

2.7.2 Blind Rivets

Blind rivets are tubular and are supplied with a mandrel through the center. The rivet assembly is inserted into a hole drilled through the parts to be joined and a specially designed tool used to draw the mandrel into the rivet. This expands the blind end of the rivet and then the mandrel snaps off. (These are also commonly called pop rivets from the sound and feel through the setting tool when the mandrel breaks.) These types of Blind rivets have non-locking mandrels and are avoided for critical structural joints because the mandrels may fall out, due to vibration or other reasons, leaving a hollow rivet that will have a significantly lower load carrying capability than solid rivets. Furthermore, because of the mandrel they are more prone to failure from corrosion and vibration.

Prior to the adoption of blind rivets, installation of a solid rivet typically required two assemblers: one person with a rivet hammer on one side and a second person with a bucking bar on the other side. Seeking an alternative, inventors such as Carl Cherry and Lou Huck experimented with other techniques for expanding solid rivets. Unlike solid rivets, blind rivets can be inserted and fully installed in a joint from only one side of a part or structure, "blind" to the opposite side.

Due to this feature, blind rivets are mainly used when access to the joint is only available from one side. The rivet is placed in a pre-drilled hole and is set by pulling the mandrel head into the rivet body, expanding the rivet body and causing it to flare against the reverse side. As the head of the mandrel reaches the face of the blind side material, the pulling force is resisted, and at a predetermined force, the mandrel will snap at the break point of the mandrel. A tight joint formed by the rivet body remains, the head of the mandrel remains encapsulated at the blind side, although variations of this are available, and the mandrel stem is ejected.

The rivet body is normally manufactured from one of three methods:

i. Wire, the most common method
ii. Tube, common in longer lengths, not normally as strong as wire
iii. Sheet, least popular and generally the weakest option.

Figure 2.11: Three aluminium blind rivets: 1/8", 3/32", and 1/16"

2.8 BENDING MACHINE

2.8.1 Introduction

Press brakes and bending machine are used to bend and fold metal by pressing it into a die. There are several types of press brakes and bending machines. Example include a hydraulic press brake, folding equipment, bending machine, press brake tooling, CNC brake press and a sheet metal press brake. A hydraulic press brake is designed for both specialized sheet metal work and continuous production application. A hydraulic press brake is designed to handle tough industrial production jobs from single-cycle operations to automated cell components. Folding equipment can be used to stiffen new metal panels that would otherwise flap around, and to put lips on pieces of sheet that would normally need screws passed through the front face. A bending machines forms angels in sheet metal. Press brake tooling

is used in cold-forming metal sheets or strips into desired sections. A CNC brake press is a computer numerically controlled, fully automated brake press with extensive bending capacity and networking function. A sheet metal press brake is used to bend.

2.8.2 CNC Bending

Metal bending forms angle in sheet metal.

Figure 2.12: A CNC Bending

2.8.3 Bending Designed Guidelines

i. The minimum inner radius recommended is approximately one material thickness for most materials.
ii. The minimum flange width should be at least 4 times the material thickness plus the bending radius.
iii. Holes or slot should be located a minimum of 3 stock thickness plus the bend radius. If it necessary to have holes closer, then the hole or slot should be extended beyond the bend line.

2.8.4 Specification for CNC Bending

i. Material – most ductile metals
ii. Alternative machine – none
iii. Tooling – CNC Bending requires only software program tooling.
iv. Reducing cost – reduce the number of bends used in design. Design parts to pack efficiently. For example, in designing a large box consider marking the sides of the box separate with bolted flanges. Avoid complex bend combinations. It can avoid the costs of the bending by adding slots in place of the bend combinations.

CHAPTER 3

METHODOLOGY

3.1 PROJECT FLOW CHART

From the flow diagram on **Figure 3.1**, this project started with discussion with supervisor about title after got from lecturer. This discussion covering project overview supervisor and throw out opinion that related about title and supervisor instruct to proposed a certain design and concept before go up to next step.

Then go to literature review about the title. The most important in these manner is a determined the project scope, objective and project planning so that we could easy get a clear overview. Then study and gather information related to the design and these entire task been done through study from internet, journal and other source.

After gather and collect all related information and obtain new idea and knowledge about the title, the project would continue with the design process. In this stage, the knowledge and idea should throw out in sketching process. After several design sketched, the best design would be choose among previous design so that we could carry on designing process. Then the selected design would be transfer to engineering drawing using SolidWork software in order to improve it capability and for analysis process.

After that material preparation which is has been confirm initially. Purpose of this process is a to determine the suitable and strength material follow the product and design requirement. This process covering purchased material, measuring

material and cutting off based on requirement. Here, this process is important because the material would determine whether our product in way to failure or otherwise.

After all the drawing and material preparation done the next process is a fabrication process. This process based on dimension has been determined from drawing. During this process, all the manufacturing process which is suitable could be used such as drilling process using CNC Machine, welding process and cutting material using CNC shearing machine.

After all process above had done on schedule without any problem such as product malfunction or product brittleness, all material for report writing is gathered. The report writing process covering and including all manners from week 2 until finished. This process also included the presentation for final presentation of the project.

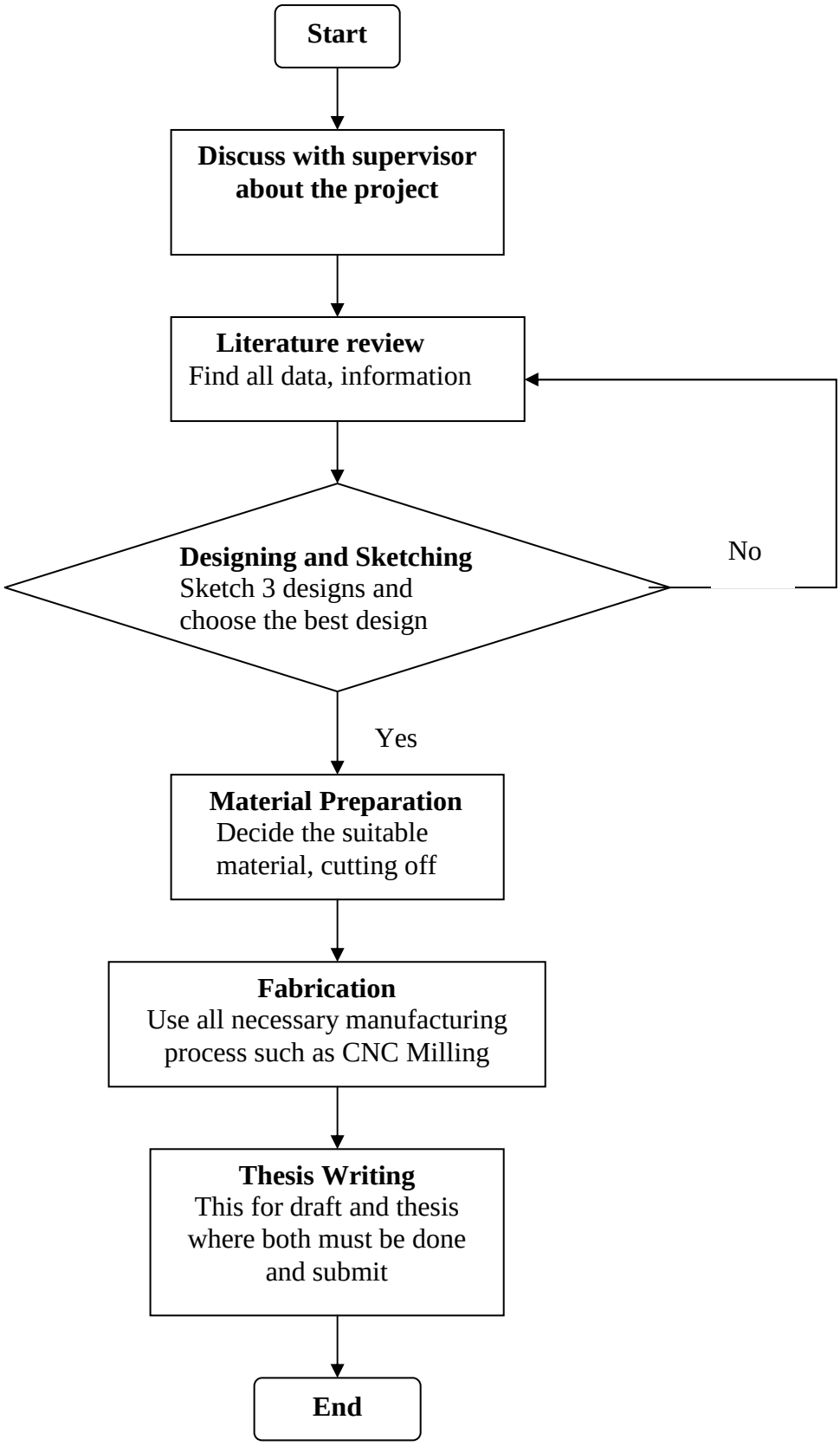

Figure 3.1: Project Flow Chart

3.2 DESIGN

The design of can crusher must have based on much aspect actually. The design consideration must be done carefully and efficiency so that the design can be fabricate easily and the system functioning. The aspect that need to point out is a crushing system where it be the most important criteria because it determine whether the product would fully function or otherwise. The system must be required low force to crush the cans and this is a important concept that would apply at all design. Then the material used in each design influence the selection thing because absolutely we need a lightweight material suitable with product size. The design is separated into three phases, firstly choose as many proposed design can be produce then choose 3 designs and try to improve it functionality and the last one is a new design with detail thing including dimension by using SolidWork software. Beside that the cost to design and fabricate must reasonable mustn’t exceeded the budget given try to reduce waste.

3.2.1 Concept A

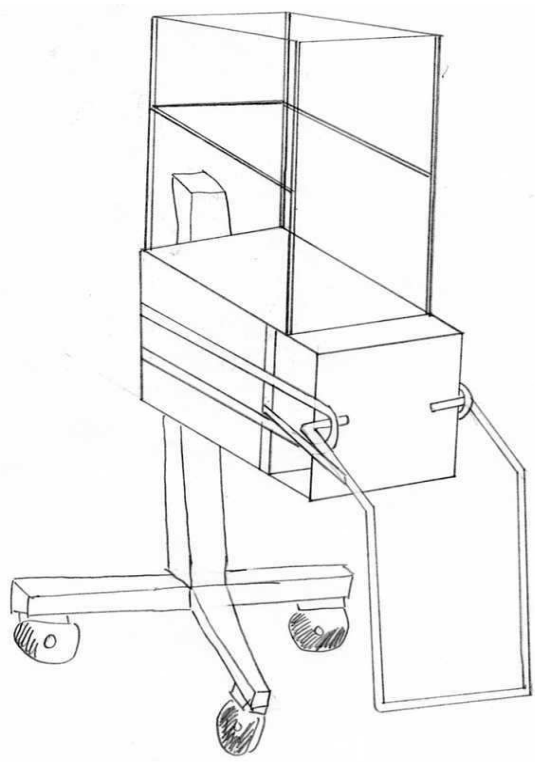

Figure 3.2: Design 1

The advantages of this design are the can crusher have hopper to locate the cans before crushing process. Besides that, this design is portable because it has three wheels. This concept is fashionable design it easy to handling too and hand operated. The user must push down the holder to crushing the cans. The disadvantages for this concept are the can crusher not has storage to locate the crushed cans and not stabile. The can crusher not available to easy to storage because this design is very big and heavy.

3.2.2 Concept B

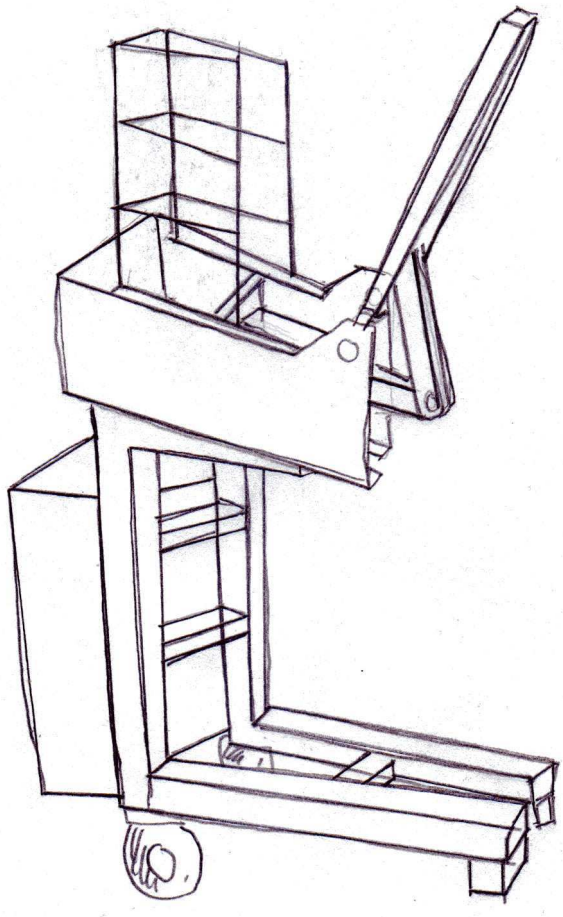

Figure 3.3: Design 2

The advantages of this design are the can crusher have hopper to locate the cans before crushing process. Besides that, this design is portable and stabile because it has four wheels. This design is easy to operate because it user the hand operating. The user pushes down the holder to crushing the cans. The disadvantages for this design are the can crusher not has storage to locate the crushed can after crushing. This design is heavy and difficult to storage.

3.2.3 Concept C

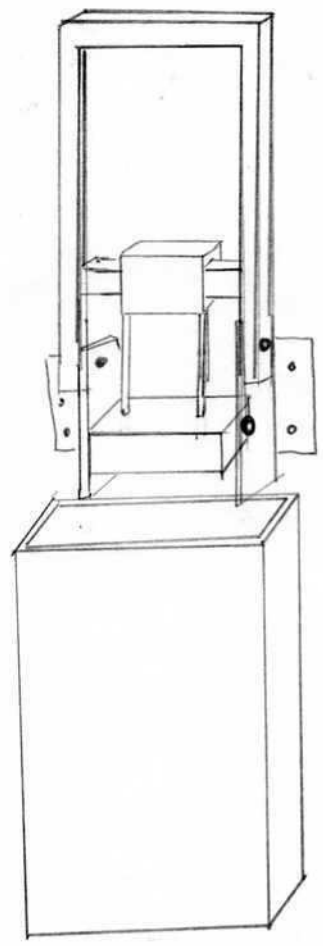

Figure 3.4: Design 3

This design use hand operating to crush the cans. The advantages for this design are the can crusher has storage to locate the can after the crush. This design also easy to storage and lightweight. The disadvantages for this design are the can crusher not portable because it attached at the wall. Besides that this design also not have hopper to locate the can before crushing process.

3.3 CONCEPT GENERATION AND EVALUATION

Three concepts for the can crusher were developed. These are evaluated against the datum or reference standard product in market with Pugh Concept Selection. From this table we could determine which concept will the best among other based on require criteria has been choose

Table 3.1: Pugh Concept Selection

	CONCEPT			
SELECTION OF CRITERIA	Design 1	Design 2	Design 3	6 can aluminum can crusher (datum)
Ease of handling	(-)	(0)	(+)	0
Durability	(+)	(+)	(-)	0
Ease to manufacture	(-)	(+)	(-)	0
Portable	(+)	(+)	(-)	0
Material availability	(+)	(+)	(+)	0
Have storage	(0)	(+)	(+)	0
Safe to use	(-)	(+)	(0)	0
Easy to maintenance by common tool	(-)	(0)	(-)	0
Light weight	(-)	(-)	(0)	0
Manufacturing cost	(+)	(+)	(-)	0
∑+	4	7	3	
∑0	1	3	2	
∑-	5	1	5	
Net	-1	6	-2	
Rank	2	1	3	

Notes:

+ =better than
-=worse than
0 =same as

Study the concept selection table shows that concept 2 score the highest positives sign. There is one negative sign in concept 2. Therefore, concept 2 is the best concept to be produce

3.4 FINALIZE DESIGN

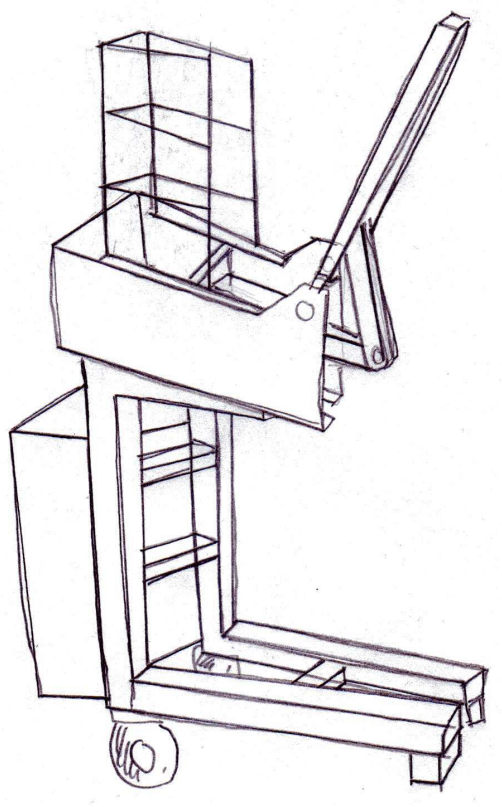

Figure 3.5: Final Design

After through Pugh concept table the best design has been determine where the first design or concept B been selected as a best concept**.** At this process the selected concept can be improve in order to make it performance much efficient or perform well. From that table shown that the concept B has much advantages and requirement needed such as;

Easy of handling: Design in concept B concern about suitability when user using it especially body posture.

Storage : Design in concept B have dustbin to locate the can after crush.

3.5 PRODUCT DESIGN SPECIFICATION

After select the selection concept, it shows that concept B is the best concept and must be fabricated. The product design specification is like below.

1. Body
   - the material use is mild steel sheet metal (3mm thickness)
   - Dimension of the body is 200mm x 90mm x 110mm.
   - Using bending machine to make this part

2. Handle
   - The material use is hollow steel bar
   - Dimension of the handle is 20mm x 20mm x 500mm
   - Using metal inert gas (MIG) to make this part.
3. Hopper
   - The material use is steel net
   - Dimension of the hopper is 130mm x 90mm x 280mm

4. Stand
   - The material use is hollow steel bar
   - Dimension is 375mm x 110mm x650mm
   - Use metal inert gas (MIG)

5. Dustbin
   - Made from plastic
   - Dimension is 300mm x 300mm

3.6 ENGINEERING DRAWING OF THE DESIGN

After a design has been selected, the next step in the designing process is dimensioning. The design is separated into part by part and the dimensioning process is firstly sketched on paper. After dimensioning, the engineering drawing of the design is drawn using Solidwork application, at this stage solid modeling method is used. Part by part solid modeling created according to the dimension done before, after all part created, the 3D model is assembled with each other base on the design.

1. Body

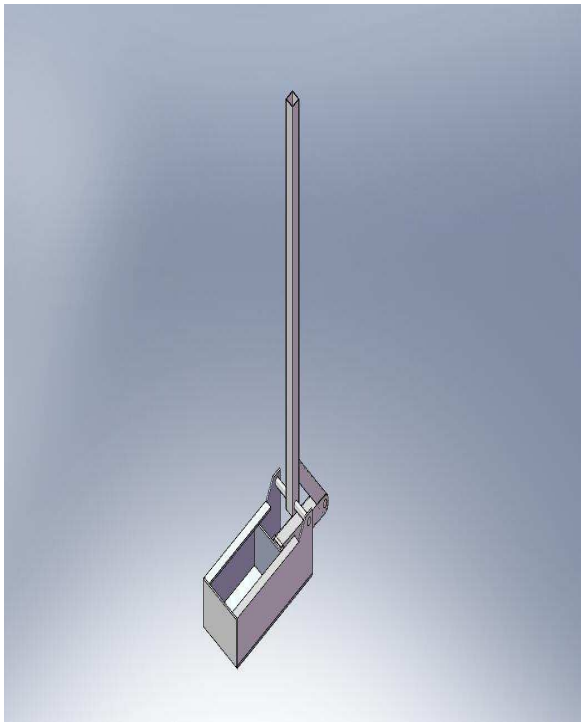

Figure 3.6: Body of the can crusher

2. Handle

Figure 3.7: Handle of the can crusher

3. Hopper

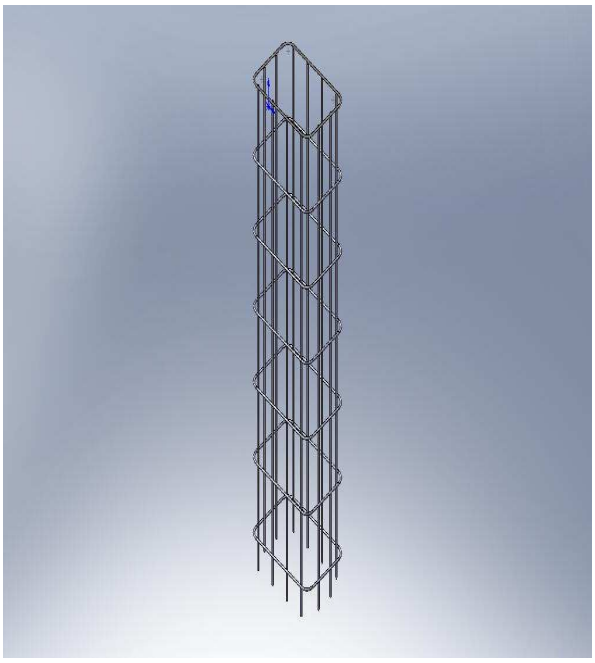

Figure 3.8: Hopper of the can crusher

4. Stand

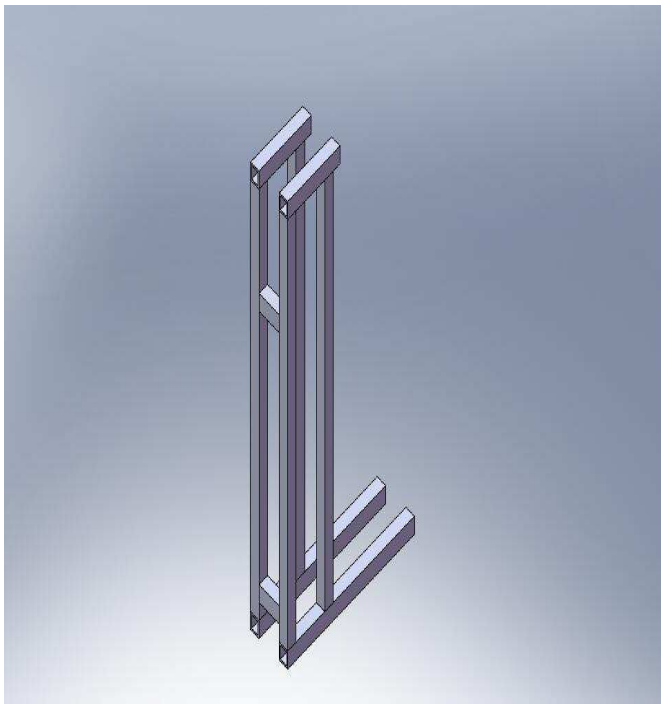

Figure 3.9: Standof the can crusher

5. Dustbin

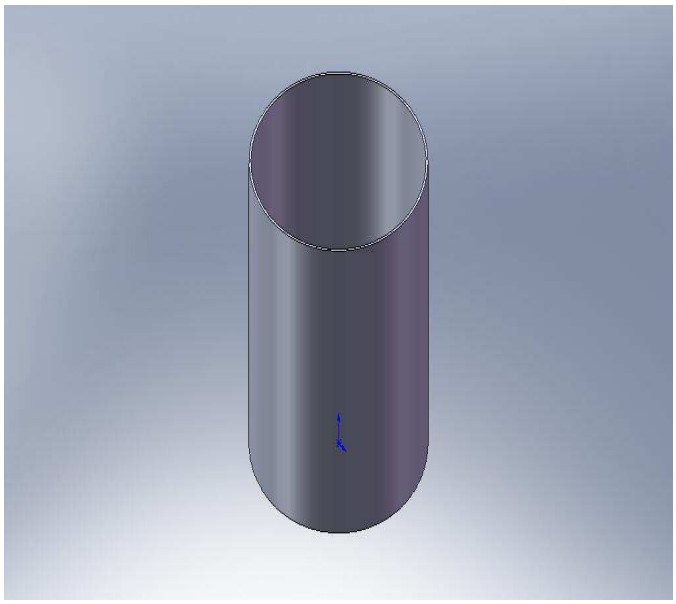

Figure 3.10: Dustbin the can crusher

6. Full Assembly Multi-Function Table

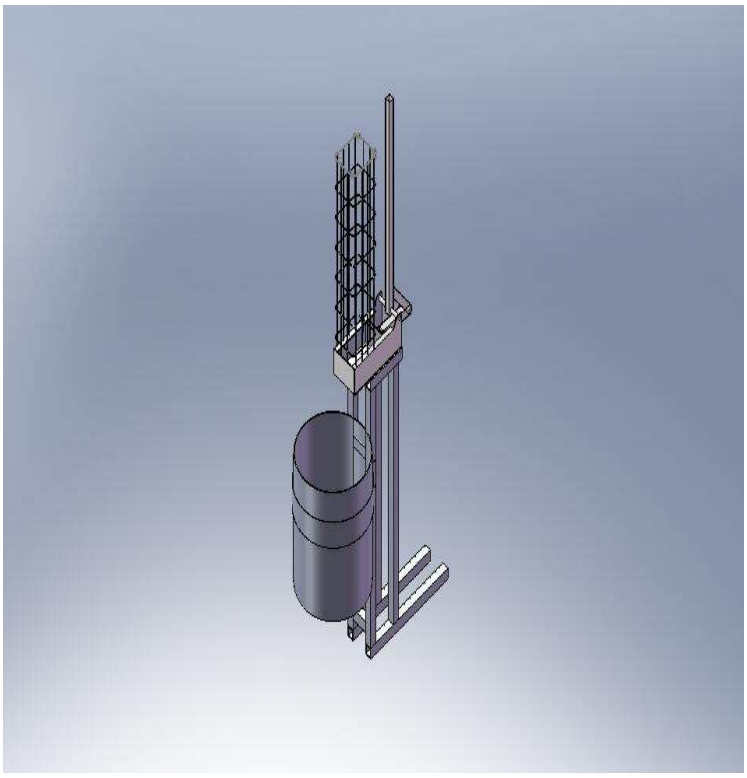

Figure 3.11: Can crusher assembly

3.7 FABRICATION PROCESS

After finish design the can crusher via engineering drawing, next process is fabrication process. This process is about using the material chosen and makes the product base on design and by followed the design dimension. Many method can be used to fabricate product for instant getting material, measuring and marking process cutting process, cutting process, drilling process, mechanical joining process, drilling process, bending process and so on. In the project fabrication process needed to make the can crusher is suitable for the application. This was include part by part fabrication until assembly to others component. The fabrication process of multi-function can crusher like below.

3.7.1 Getting Material

The first step to make the can crusher is the getting material. The selection of material is depending on material that has been in UMP Mechanical Lab. The acquisition of material must be get agreement from supervisor and lecturer.

Figure 3.12: Material at FKM lab

3.7.2 Measuring and Marking Process

After got the material fabrication will continue to measuring and marking process. In this step the material was measuring and marking base on actual dimension by using the marker pen and measure tape.

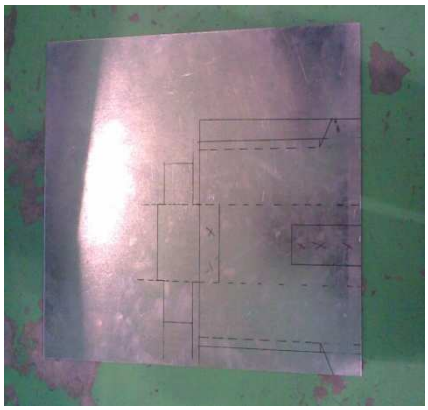

(i)

(ii)

Figure 3.13: measuring and marking at the workpiece

3.7.3 Cutting Process

The fabrication will continue to cutting process. At this step many machine uses to cut the workpiece. The machine is like shearing machine, vertical bendsaw machine and floor disc cutter. The sheet metal will cut by using the shearing and vertical bendsaw machine while the hollow steel bar will cut by using the floor disc cutter.

(i) **(ii)**

(iii)

Figure 3.14: Cutting process

Cut the workpiece by using

i) vertical bendsaw machine,

ii) floor disc cutter,

iii) shearing machine.

Figure 3.15 show that workpiece done by using the shearing and vertical bendsaw machine.

Figure 3.15: The worpiece done after cutting process

3.7.4 Drilling Process

After cut the workpice by using various machines, the next step is drilling process. This process is to make hole at the workpiece. The machine use fo this step are drilling machine and hand drill.

Figure 3.16: Make hole by using the drilling machine

3.7.5 Bending Process

Fabrications go through to the bending process. This step to make the body of the can crusher. The workpiece will bend using bending machine.

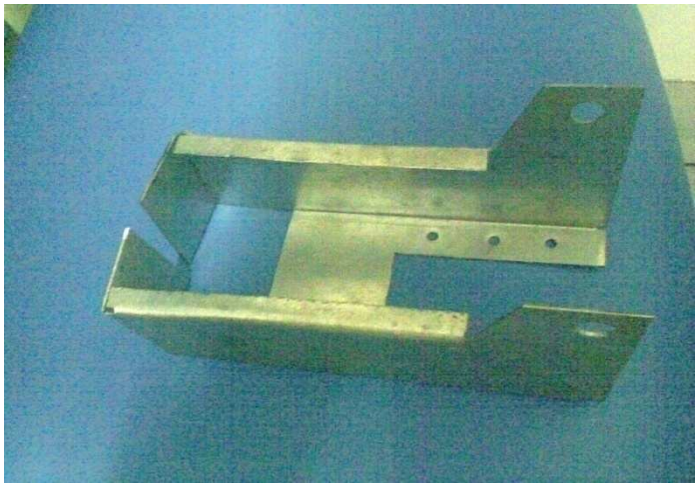

Figure 3.17: Workpiece done by bending process

3.7.6 Mechanical Joining Process

Fabrication will continue to mechanical joining process. Many mechanical joining method use like metal inert gas (MIG) welding and rivet. MIG welding use to join the hollow steel bar whiles the rivet use to join the sheet metal and hollow steel bar.

Figure 3.18: Join the hollow steel bar using MIG welding.

Figure 3.19: Join the sheet metal and hollow steel bar using rivet.

3.7.7 Painting Process

After finish all process, the fabrication is continued with painting process. This process is to cover the material from rust and to have better appearance. The black and red colour was choosing.

Figure 3.20: Painting the can crusher.

CHAPTER 4

RESULT AND DISCUSSION

4.1 INTRODUCTION

This chapter will discuss about the project. It includes the complete fabrication, types of defects, product specification and cause of problem of the project. The analysis also was helped to give improvement of the can crusher. It also will show the product defected and how to troubleshoot the defect. At the same time, this analysis also to compare between of the product specification was target and product specification when completed fabricated.

4.2 RESULTS

4.2.1 Introduction

After finish fabrication process, the product has been analyzed. At this stage, all information about this product is collected and gathered. It is important to classify the product before it can used. The complete fabrication the can crusher is like below.

Figure 4.1: Isometric view

Figure 4.2: Front view

Figure 4.3: Top view

Figure 4.4: Side view

4.2.2 Product Specification

This is another exampleof analysis process. The product is classify to several category such as weight, colour, wide, height and other else. The product spesification is like below.

Table 4.5: Table of product specification

Category	Result
Colour	Red and black
Height	1000mm
Wide	90mm
Crushing time per can	3sec/can
Number of can in hopper	4 can
Crushing force	30N

4.2.3 Types of Defects

After finish fabrication process, many type of defects is exist. It happens from fabrication process and the weakness using machine and tool. At the same time, this even can give someone more axperience and knowledge. Type of defects like below.

4.2.3.1 Bead

Figure 4.5 is an example for a defect in body. The bead is not trim very well after welding process. The voltage when welding process is not suitable for this material. Insufficient experiences to handle this machine also cause of the defected.

Figure 4.5: Bead at the body

4.2.3.2 Not Parallel

Figure 4.7 is an another example of defect for this product. It is occur at the body of product. Careless when using bending machine is cause for this defect.

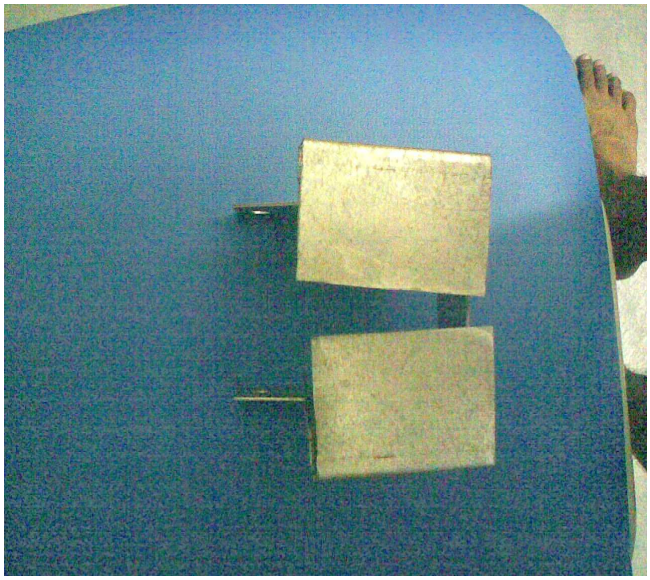

Figure 4.6 : The body not parallel

4.3 DISCUSSION

After finish fabrication process, many type of defects are detected. Have a many point to create a defected such as acquistion material. The materials that have been select are not suitable to fabricate a certain part such as body of the can crusher. It is because this material s soft and easy to bend or damage when receive force. The defect is also from fault when chosen the material. It is happpening from material UMP mechanical lab is limited and many students will use it.

The machine that was used also is a point to create a defected. For example is bending machine. It cannot be from a sheet metal into a 90 degree and ti form this part using manually such as bend this part using mallet. This machine also cannot form a cretain shape suchas a complex. At UMP mechanical lab, the bending machine cannot form a very small product such as a can crusher. This part also use a manually to form and teh product have many defect.

This process fabrication chosen also is a point to create a defect. During the finishing process, grinding machine was used to clean a surface before painting. For a certain part, this process cannot be use because the material is soft and easy to bend. The experience to use several machine also is a point to create the defect. Before use a welding machine,the voltage and speed of wire must be setup and suitable for the material. This is to avoid the material from damage. To handle this machine, someone must have more experience and guide from instructor. It is because the bead that was get is not tidy and interesting. Another example is drilling machine. Before run this machine, the part to create hole must be measure and knock with marker tool. This is to avoid slip page when drilling process. The drilling also must 90 degree from a workpiece. It is because to shunt the hole from slanting.

CHAPTER 5

RECOMMENDATION AND CONCLUSION

5.1 INTRODUCTION

For the final chapter it represent about conclusion and recommendation for the project. The important things for this chapter are about the problems encountered during the whole project carried out. The problem are included the process planning that had been done. These project problem also make the student to think more creative to solve the problem. This chapter will also discuss about the conclusion of the project, concluding all the process involved. Beside, this chapter also contains recommendations about the project. So for this recommendation it can make improvement about the project for future work.

5.2 RECOMMENDATION

After complete this task, in the future the can crusher look more interesting and ergonomic if :-

i. The wheel put on the bottom to make this product portable.
ii. The ball bearing put in the body to make the handle can move very well during crushing process.
iii. Resize the hopper to able more aluminium cans can put in this part.

5.3 CONCLUSION

As the conclusion, the objective of the project achieved :-

i. The can crusher was designed and fabricated that required low force to crush the cans. The product need about 30N force to crush the can.
ii. The can crusher was designed and fabricated that it is can crush a can at a time.
iii. The can crusher was designed and fabricated that has storage to locate the can after crushed. The dustbin at the product is to locate the can after crushed.

REFERENCES

1. Henry,D (1950), *The Industrial Designer and The Businessan*, Havard Business Review, University of H avard

2. Ulrich T. and. Eppinger Steven D, *Product Design and Developmen*, Newcastle, United Kingdom

3. http://en.wikipedia.org/wiki/Metal_Inert_Gas

4. http://en.wikipedia.org/wiki/Rivet#Blind_rivets

5. http://en.wikipedia.org/wiki/Drill

APPENDIX A

DETAIL DRAWING OF THE PART

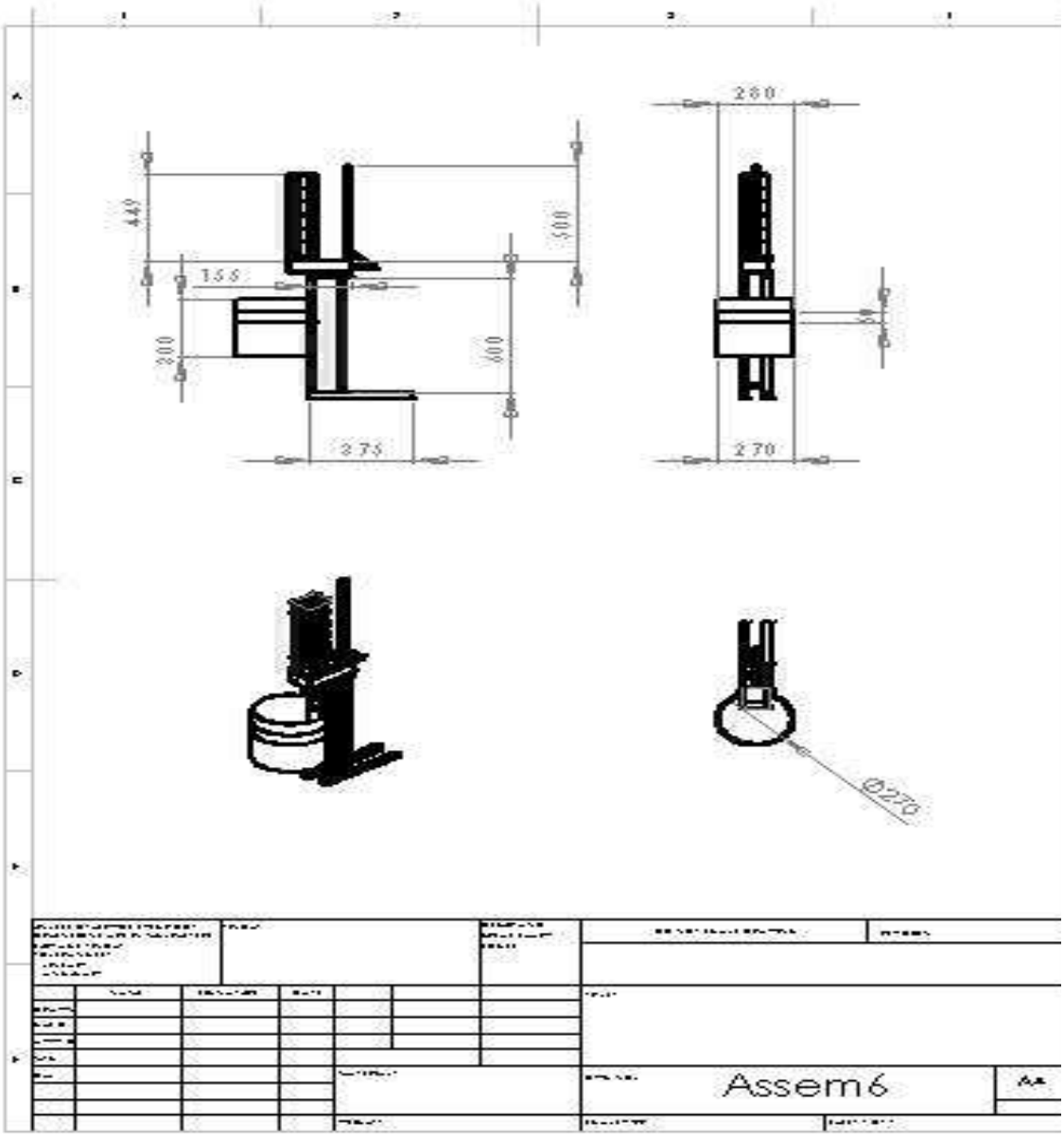

A1 - Can Crusher Assembly

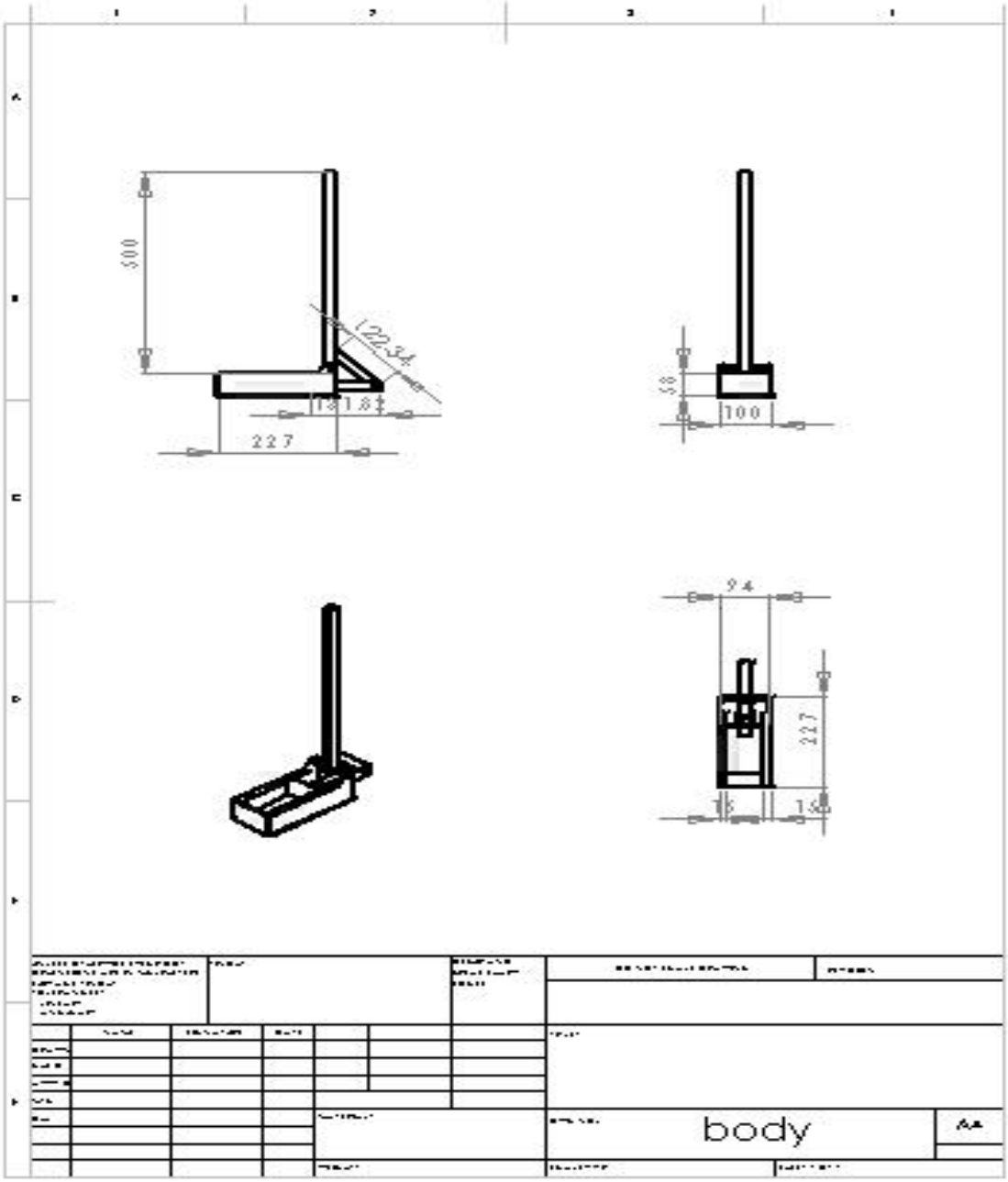

A2 - Body

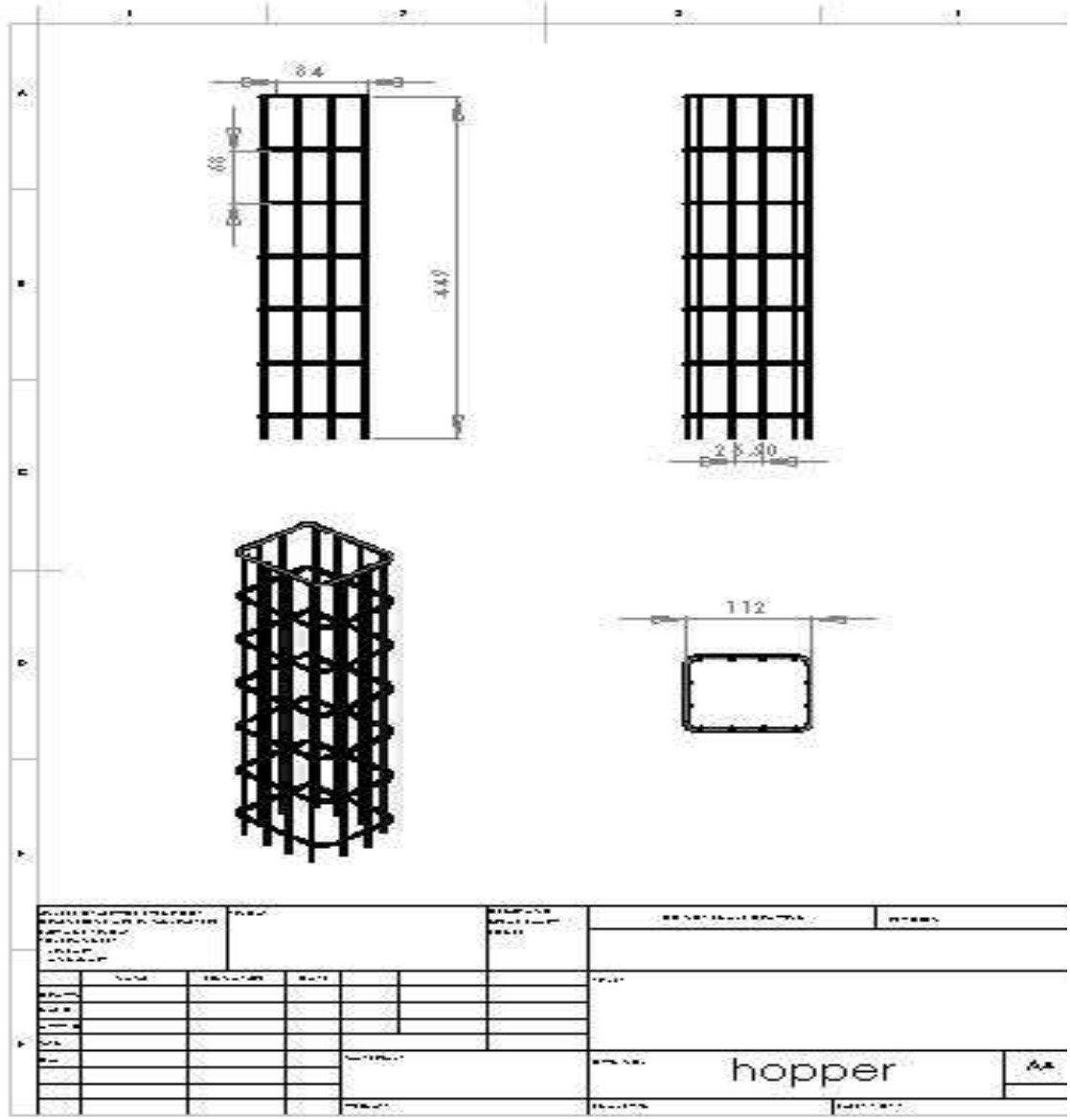

A3 - Hopper

APPENDIX B

MACHINE TOOL AND EQUIPMENT

B1 - MIG Welding Machine

B2 - Abrasive Cutter

B3 - Measuring Tape

B4 - Hand Grinding

B5 - Bending Machine

B5 - Personal Protection Equipment (PPE)

B6 - Blind Rivet

B7 - Hand Drill