UNIVERSITI MALAYSIA PAHANG

BORANG PENGESAHAN STATUS TESIS ◆

JUDUL: DEVELOPMENT OF ARCHERY TEST RIG

SESI PENGAJIAN: 2012/2013

Saya, **SEOW KOK FOO (92016-06-5623)**
(HURUF BESAR)

mengaku membenarkan tesis Projek Tahun Akhir ini disimpan di perpustakaan dengan syarat-syarat kegunaan seperti berikut:

1. Tesis ini adalah hakmilik Universiti Malaysia Pahang (UMP).
2. Perpustakaan dibenarkan membuat salinan untuk tujuan pengajian sahaja.
3. Perpustakaan dibenarkan membuat salinan tesis ini sebagai bahan pertukaran antara institusi pengajian tinggi.
4. **Sila tandakan (√)

	SULIT	(Mengandungi maklumat yang berdarjah keselamatan atau kepentingan Malaysia seperti yang termaktub di dalam AKTA RAHSIA RASMI 1972)
	TERHAD	(Mengandungi maklumat TERHAD yang telah ditentukan oleh organisasi / badan di mana penyelidikan dijalankan)
√	**TIDAK TERHAD**	

Disahkan oleh:

(TANDATANGAN PENULIS)

(TANDATANGAN PENYELIA)

Alamat Tetap:

NO 20, Jalan Selasih,
Taman Rimba,
28400 Mentakab,
Pahang Darul Makmur.

MOHDAZRUL HISHAM BIN MOHD ADIB

(Nama Penyelia)

Tarikh: **31 DECEMBER 2012**

Tarikh: **31 DECEMBER 2012**

CATATAN: * Potong yang tidak berkenaan.

** Jika tesis ini SULIT atau TERHAD, sila lampirkan surat daripada pihak berkuasa/organisasi berkenaan dengan menyatakan sekali tempoh tesis ini perlu dikelaskan sebagai SULIT atau TERHAD.

◆ Tesis dimaksudkan sebagai tesis bagi Diploma secara penyelidikan atau disertai bagi pengajian secara kerja kursus.

DEVELOPMENT OF ARCHERY TEST RIG

SEOW KOK FOO

Report submitted in partial fulfillment of the requirements for the award of

Diploma of Mechanical Engineering

Faculty of Mechanical Engineering

UNIVERSITI MALAYSIA PAHANG

JANUARY 2013

SUPERVISOR'S DECLARATION

I hereby declare that I have checked this prject and in my opinion, this project is adequate in terms of scope and quality of this thesis is qualified for the award of the Diploma of Mechanical Engineering.

Signature :

Name : MR. MOHD AZRUL HISHAM BIN MOHD ADIB

Position : LECTURER

Date :

STUDENT'S DECLARATION

I hereby declare that the work in this thesis is my own except for quotations and summaries which have been duly acknowledged. The thesis has not been accepted for any diploma and is not concurrently submitted for award of other diploma.

Signature :

Name : SEOW KOK FOO

ID NUMBER : MB10096

Date :

Dedicated to my beloved parents

SEOW HOI SIN

and

LIEW MAN YOKE

For their everlasting love, guidance and support in the whole journey of life

ACKNOWLEDGEMENT

First of all I would like to express my deepest gratitude to my God for giving me strength and leading me to the path of completion of this final year project. Infinite thanks I brace upon him.

Besides, I would also like to take this opportunity to express my gratitude and sincere appreciation to everyone who helped me in completing this report. I am very grateful to my supervisor, Mr. Mohd Azrul Hisham bin Mohd Adib for guiding me on completing report. He has not been greedy in supporting and giving great idea for me to complete this report. I also want to thank him for his trust and patience. All the time spent on checking my report and correcting my mistakes are very appreciated.

I would like to acknowledge to all the staffs in Mechanical Laboratory, whom gave me permission to use the necessary tools in the laboratory and guide me the machine's operating system.

I would also like to express my deepest appreciation to my parents whom always support me and motivate me to complete this final year project.

My sincere appreciation also extends to all my colleagues, housemates, and friends whom had provided assistance at various occasions by support and ideas for this final year project.

Finally to individuals who has involved neither directly nor indirectly in succession of this thesis. Indeed I could never adequately express my indebtedness to all of them. Hope all of them stay continue support me and give confidence in my efforts in future. Thank you.

ABSTRACT

This thesis deals with the development of archery test rig. Test rig is a useful device as it is an apparatus used for assessing the performance of a piece of mechanical equipment. The main objective of this final year project is to design and fabricate an archery test rig for further study of the performance of a bow. This thesis describes the methods of designing and fabricating the mechanical part of the test rig. There are many steps taken to design and fabricate the mechanical parts of this test rig. The structural three-dimensional solid modeling of the test rig was developed by using the SolidWorks engineering drawing software. The fabrication process also undergoes many steps such as material marking, cutting, drilling, welding, grinding and finishing of the test rig by painting. The results of the testing of the performance of bow and how far the arrow can reach with certain applied tension on the bowstring also discussed in this thesis.

ABSTRAK

Tesis ini menceritakan tentang pembangunan alat penguji memanah. Alat penguji merupakan suatu alat yang berguna di mana ia dapat menguji prestasi sesuatu peralatan mekanikal. Objektif utama projek tahun akhir ini adalah untuk mereka bentuk dan menghasilkan sebuah alat penguji memanah. Tesis ini juga membincangkan cara-cara mereka bentuk dan proses penghasilan bahagian mekanikal alat penguji memanah. Model 3-dimensi alat penguji ini adalah dilukis dengan mengunakan perisian lukisan kejuruteraan yang dinamakan *"SolidWorks"*. Proses penghasilan alat penguji ini telah menjalani banyak proses tertentu seperti mengukur, menanda, memotong bahan mentah, membuat lubang, mencantumkan bahagian-bahagian tertentu, mengikir bahagian-bahagian yang terlebih semasa dicantumkan dan akhirnya alat penguji ini dicatkan supaya ia nampak lebih menarik. Di samping itu, keputusan ujian prestasi panah dan jarak yang dicapai apabila daya tertentu diaplikasikan pada tali panah juga akan dibincangkan dalam tesis ini.

TABLE OF CONTENT

CHAPTER 1 INTRODUCTION

CHAPTER 2 LITERATURE REVIEWS

LIST OF TABLES

LIST OF FIGURES

LIST OF SYMBOLS

Kg	Kilogram
m	Meter
mm	Milimeter
Ø	Diameter
R	Radius

LIST OF ABBREVATION

CAD	Computer Aided Design
SMAW	Shielded Metal Arc Welding
GMAW	Gas Metal Arc Welding
MIG	Metal Inert Gas
PPE	Personal Protective Equipment
UMP	Universiti Malaysia Pahang

CHAPTER 1

INTRODUCTION

1.1 INTRODUCTION

Archery is the art, practice, or skill of propelling arrows with the use of a bow. Historically, archery has been used for hunting (for food) and combat (for war), while in modern times, its main use is that of a sports activity. However animal hunting using bow are still being practiced till today. This is mostly practiced by the European in the western country where they hunt the animals in the forest. A person who participates in archery is typically known as an "archer" or "bowman", and one who is fond of or an expert at archery can be referred to as a "toxophilite"

Archery, one of the oldest sports still practiced, is closely linked to the development of civilisation. As a cultural advance, it was comparable to the discovery of fire and the invention of the wheel.

Archery was the favourite sport of the Egyptian pharaohs during the 18th dynasty (1567-1320 BC). Many centuries later, some of the earliest recorded archery tournaments took place during the Zhou dynasty (1027- 256 BC) in China. Such events were attended by Chinese nobility. Much later, English writers honoured the longbow for famous contributions to their country's victories in the battles of Crécy, Agincourt and Poitiers.

In archery however it is important to maintain the performance of the bow from time to time. The bowstring of the bow tends to become loosen every time an archer makes a shot.

This is due to the energy gain from the pulling force exerted by the archer on the string causing the bonding between the atom in the string to break. This will then eventually affect the performance of the bow as the string got weaken. Thus, a test rig is designed to test the performance of the bow. The function of the test rig is to pull the bowstring and hold it with a constant force before it is being released.

1.2 PROBLEM STATEMENT

It is less possible for an athlete that take part in an official archery sport like Olympics to hold the bow in a constant height and angle because a human body tend to move from time to time. Therefore, a mechanical device is necessary where the bow and arrow will be placed to it.

1.3 OBJECTIVE

The objective of this project is to design and fabricate an archery test rig.

1.4 SCOPE

- To fabricate a portable test rig
- Using mild steel as raw material
- To fabricate an adjustable height and angle test rig

CHAPTER 2

LITERATURE REVIEWS

2.1 INTRODUCTION

The title “Development of Archery Test Rig” requires an amount of good understanding on the knowledge of types of bow and shooting machine mechanism. Therefore, executing a research is necessary to obtain all the relevant and useful information that are available and related to this project. The information or literature reviews obtained are essentially valuable to assist in the fabrication and specification of this final year project. With this ground established, the project can be accomplished with guidance in achieving the target mark.

2.2 TYPES OF ARCHERY TEST RIG

2.2.1 Vertical Standing Test Rig

Vertical standing test rig holds the bow in a vertical position at the front of the test rig. The frame of this type of test rig is built from 3/4" threaded black iron pipe. This material is inexpensive, provides mass to the frame, and is easy to assemble using pipe fittings. Inexpensive pulley system is used to draw the bow with a jam cleat attached to the blue slide. The slide has two 3/8" unbolts attached in a vertical orientation with 1/2" white PVC covering the treads. A thumb release fits perfectly on the PVC pipe and can be moved up or down to adjust the vertical aim.

Hose clamps is added above and below the release aid to fix the release in a constant position. The frame of the test rig is simply screwed together using the threaded pipe. Closed object cannot be screw together a so two couplers 10 inches from one end is added. The pipes screw into the couplers and the couplers screw together. The slides for the release platform were made from 1" pipe that was drilled/sanded to make them slide smoothly over the 3/4" pipe. The similar 1" pipe is used to create a bow mount. The bow is attached to the 1 " pipe using clamps, the 1" pipe slides over a 3/4" pipe that is bolted to the frame.

To make the frame square and strong, make sure that all the pipes are cut to exact lengths. The most critical construction detail is to securely fasten the bow to the pipe bow mount. The bow handle is not a regular shape so a wooden form is made to help to keep the bow straight and plump on the pipe. A steel plate provides a backing plate for the clamps and also provides significant area of contact with the bow to reduce side to side wobble. The bow can freely rotate forward and back, but not side to side.

Figure 2.1: Vertical Standing Test Rig

Source: https://sites.google.com/site/technicalarchery/

Materials were purchased at a local home store. The major items have been listed below. Total cost of the system is RM109. Table 2.1 is all the price listed for the materials.

Table 2.1: Price list

Source: https://sites.google.com/site/technicalarchery/

Number	Description	Unit Cost (RM)	Total Cost (RM)
2	3/4" black iron threaded rod - 60"	8.00	16.00
2	3/4" black iron threaded rod - 10"	4.00	8.00
2	3/4" black iron threaded rod - 8"	3.50	7.00
1	3/4" black iron threaded rod - 12"	5.00	5.00
2	1" black treaded rod - 6"	3.00	7.00
1	1" black threaded rod - 8"	4.00	4.00
4	3/4" black iron 90 degree elbow	1.50	6.00
2	3/4" black iron treaded coupler	2.50	5.00
2	3/8" x 6" Ubolts	5.00	10.00
2	1/4"x2" Ubolts	1.50	3.00
1	rope with pulley and jam cleat	15.00	15.00
1	laser level	20.00	20.00
2	1/4"x3" Ubolts to hold bow	1.50	3.00
		Total	**RM109**

2.2.2 Wooden Type Test Rig

This shooting rig is totally adjustable from the back end and the clamp that is made of iron will accept various type of bow. Once clamped in and the release mechanism is clipped on, the back end triggering mechanism can be raised or lowered to match the shelf height by just a quick spin of the knobs, then again with a quick spin adjustment can be adjusted to left or right to match the sight window thickness giving the whole process of shooting the bow totally torque free while pulling it to the trigger.

The shooting rig is also totally acceptable to left hand bows and gives a fair shot against the right handlers. However, this rig is made up of wood mostly. The bow is clamped on the side of the rig instead of front.

Figure 2.2: Wooden Type Test Rig

Source: http://piratesofarchery.net

2.2.3 Kwik-Shooter

The kwik-shooter is used to hold a bow vertically in front of it. There is a T-shaped bracket in front of this shooter to clamp the bow firmly. This shooter is designed with an extendable body on the front part so that the length is adjustable. It is supported by 4 legs below its body and the legs are made foldable so that it will not look bulky for easy storage. The bowstring is draw by a winding machine on the back of the shooter. The winding machine is powered by a hand drill and it can also be winded manually. Two barrels of load is attached to the body of the shooter to prevent the jerking movement when the arrow is released.

This device is made from aluminum and mild steel material. This is to provide the lightweight feature for owner to carry it around. The dimensions of this device is 780mm in height, 1100mm in length, and 650mm in its width.

Figure 2.3: Kwik-Shooter

Source: http://www.archerytalk.com/vb/

2.2.4 Hooter Shooter

The hooter shooter is supported by 3 legs at the bottom which is 2 at the rear and 1 in front. There is a winding machine mounted on the body at the back of the shooter to draw the bowstring. The rope is attached to a pulling device. The pulling device is slotted by 2 stainless steel rod to aid in accuracy. This is also to prevent the bowstring to go left and right during the pulling process and provide a straight pull that is parallel to the bow.

This product is made from mostly stainless steel especially for the body part. There are also some rubber material fitted at the legs to prevent slippery during the arrow releasing. The dimension of this shooter is 840mm in height, 1000mm in length and 600mm in width.

Figure 2.4: Hooter Shooter

Source: http://www.abbeyarchery.com.au

2.2.5 Super Shooter

This super shooter is designed heavy enough so that no weight is needed to keep the machine from jumping during the shooting process. The body of this test rig is built from mainly iron materials and some steel materials such as angle bar. Besides, there is also some sheet metals used to make a joint between the body part and the legs part. However plastic materials is also used to build the holder in front of this machine to clamp the bow. The parts of this machine mostly is joint by using welding process and bolt.

There is a winding wheel mounted at the back of this test rig to draw the bowstring. A trigger is also attached to the rope of the winding wheel for a quick release mechanism when the arrow is about to release. The trigger helps to ease in releasing the arrow.

Figure 2.5: Super Shooter

Source: http://www.archeryaddix.com/

2.3 TYPES OF MATERIALS

2.3.1 Iron Metal

Iron is a shiny, bright white metal that is soft, malleable, ductile and strong. Its surface is usually discoloured by corrosion, since it combines readily with the oxygen of the air in the presence of moisture. In absolutely dry air, it does not rust. The oxide that is produced is crumble and soft, giving no protection to the base metal. Practically, it is always obtained from ores that are usually the oxides, and occasionally the carbonate, as low in sulphur and phosphorus as possible. In the field of application, iron is best known as the metal in making weapons and tools, and whose ability by means of alloys and heat treatment to suit itself to every application makes it the primary metal of technology. Iron is the most frequently encountered metal in daily life, always in the form of manufactured objects, and usually covered with a protective coating buried deep within the object. Concrete structures contain essential reinforcing iron; electrical machines, including transformers, depend on iron. Iron is an excellent and versatile material of construction- strong, tough, easily formed and worked, and very importantly, cheap compared to the alternative. Plastics give it competition, especially in products that must be manufactured at the lowest cost where strength and durability are not the primary concerns, such as modern American automobiles. Aluminum is as strong competitor where weight is a concern, as in aircraft.

However, the versatility of iron carbon alloys cannot be matched in any other material. Alloys with other metals, such as nickel, chromium and manganese, give further advantages. These steels can be tailored to nearly every demand, and are not significantly challenged as materials of construction. The shortcomings of iron are its weight, and its properties to rust.

Figure 2.6: Iron Metal

Source: http://www.gasgoo.com/showroom/

2.3.2 Stainless Steel

Stainless steel is also known as steel alloy with a minimum of 10.5% to 11% chromium content by mass. Stainless steel does not readily corrode, rust or stain with water as ordinary steel does, but despite the name it is not fully stain-proof, most notably under low oxygen, high salinity, or poor circulation environments. It is also called corrosion-resistant steel or CRES when the alloy type and grade are not detailed, particularly in the aviation industry. There are different grades and surface finishes of stainless steel to suit the environment the alloy must endure. Stainless steel is used where both the properties of steel and resistance to corrosion are required. Stainless steels contain sufficient chromium to form a passive film of chromium oxide, which prevents further surface corrosion and blocks corrosion from spreading into the metal's internal structure, and due to the similar size of the steel and oxide molecules they bond very strongly and remain attached to the surface. Due to its corrosion resistance and staining, low maintenance characteristics, it is an ideal material for many applications. This alloy is milled into coils, sheets, plates, bars, wire, and tubing to be used in cookware, cutlery, hardware, surgical instruments, major appliances, industrial equipment and as an automotive and aerospace structural alloy and construction material in large buildings. It is also used in jewellery and watches with 316L being the type commonly used for such applications. It can be re-finished by any jeweler and will not oxidize.

Due to its corrosion resistance and staining, low maintenance characteristics, it is an ideal material for many applications. This alloy is milled into coils, sheets, plates, bars, wire, and tubing to be used in cookware, cutlery, hardware, surgical instruments, major appliances, industrial equipment and as an automotive and aerospace structural alloy and construction material in large buildings. It is also used in jewellery and watches with 316L being the type commonly used for such applications. It can be re-finished by any jeweler and will not oxidize.

2.3.3 Sheet Metal

Sheet metal is simply metal formed into thin and flat pieces. It is one of the fundamental forms used in metalworking, and can be cut and bent into a variety of different shapes. Countless everyday objects are constructed of this material. Thicknesses can vary significantly, although extremely thin thicknesses are considered foil or leaf, and pieces thicker than 6 mm are considered plate. Sheet metal is available in flat pieces or as a coiled strip. The coils are formed by running a continuous sheet of metal through a roll slitter. The thickness of the sheet metal is called its gauge. Commonly used steel sheet metal ranges from 30 gauge to about 8 gauge. The larger the gauge number, the thinner the metal. Gauge is measured in ferrous metals while nonferrous metals such as aluminum or copper are designated differently. There are many different metals that can be made into sheet metal, such as aluminum, brass, copper, steel, tin, nickel and titanium. For decorative uses, important sheet metals include silver, gold, and platinum. Sheet metal also has applications in car bodies, airplane wings, medical tables, roofs for buildings and many other things. Sheet metal of iron and other materials with high magnetic permeability, also known as laminated steel cores, has applications in transformers and electric machines. Historically, an important use of sheet metal was in plate armor worn by cavalry, and sheet metal continues to have many decorative uses, including in horse tack.

2.3.4 Steel

Steel is an alloy made by combining iron and carbon. The carbon content in the steel is between 0.2% and 2.1% by weight. Carbon act as a hardening agent, preventing dislocations in the iron atom crystal lattice from sliding past one another. Varying the amount of alloying elements and the form of their presence in the steel controls qualities such as the hardness, ductility, and tensile strength of the resulting steel. Steel with increased carbon content can be made harder and stronger than iron, but such steel is also less ductile than iron. Though steel had been produced by various inefficient methods long before the Renaissance, its use became more common after more efficient production methods were introduced in the 17th century. In the mid-19th century, steel became an inexpensive mass-produced material. Further refinements in the process, such as basic oxygen steelmaking (BOS), lowered the cost of production while increasing the quality of the metal. Today, steel is one of the most common materials in the world, with more than 1.3 billion tons produced annually. It is a major component in buildings, infrastructure, tools, ships, automobiles, machines, appliances, and weapons. Modern steel is generally identified by various grades defined by assorted standards organizations.

Figure 2.7: Steel

Source: http://www.longhaisteelinc.com/

2.3.5 Laminated Wood Composite

It is also known as engineered wood, man-made wood, or manufactured board. It includes a range of derivative wood products which are manufactured by binding the strands, particles, fibers, or veneers of wood, together with adhesives, to form the composite materials. These products are engineered to precise design specifications which are tested to meet national or international standards. Typically, laminated wood composites products are made from the same hardwoods and softwoods used to manufacture lumber. One of the examples of product made by laminated wood composites is plywood. Plywood is a wood structural panel. It also called the original engineered wood product. Plywood is manufactured from sheets of cross-laminated veneer and bonded under heat and pressure with durable, moisture-resistant adhesives. By alternating the grain direction of the veneers from layer to layer, or "cross-orienting'", panel strength and stiffness in both directions are maximized. Other structural wood panels include oriented strand board and structural composite panels. Laminated composites wood has similar application to solid wood products due to its several advantages such as it comes in variety of thicknesses, sizes, grades , and exposure durability classification, and making the products ideal for use in unlimited construction, industrial and home project application. However, laminated composites wood has its disadvantages as well. Some products, such as those specified for interior use, may be weaker and more prone to humidity-induced warping than equivalent solid woods.

Figure 2.8: Plywood

Source: http://www.homedeco2u.com/

2.4 COMMON FABRICATION METHOD

2.4.1 Shearing

Shearing is also known as sheet metal cutting. It is a cutting process where piece of sheet metal is separated by applying force to cause the material to fail. Shearing force is commonly performed during cutting process. Shearing force is the amount of force required to cut or remove a piece of material through shear. The applied force must produce enough shear stress in order to exceed the ultimate shear strength of the material in order to separate the material. Ultimate shear strength is the amount of shear stress a material can sustain, measured in units of force per unit area. Shear strength is commonly expressed in megapascals (MPa) or pounds per inch (psi) of original cross section. this shearing force is applied by 2 tools, one on the above while another one below the sheet metal. The tool above the sheet will delivers a quick downward blow to the sheet metal that rests over the lower tool. A small clearance is present between the edges of the upper and lower tools, which facilitates the fracture of the material. The size of clearance is typically 2-10% of the material thickness and depends upon several factors, such as the specific shearing process, material, and sheet thickness.

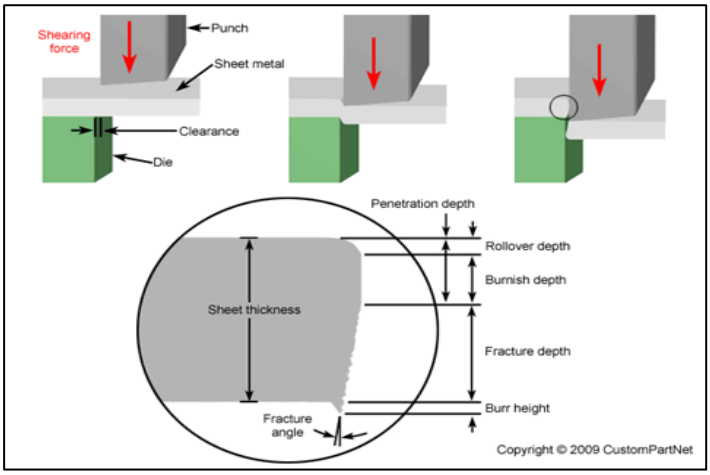

Figure 2.9: Shearing Process

Source: http://www.custompartnet.com

2.4.2 Bending

Bending is a process where metal is deformed by plastically deforming the material and changing its shape. The material is stressed beyond the yield strength but below the ultimate tensile strength. Surface area of material will not result in obvious change. Usually, bending refers to deformation about one axis. Bending is able to produce many different shapes. During bending process, material is placed on the die, and positioned in place with stops and /or gages. It is held in place with hold-downs. The upper part of the press, the ram with the appropriately shaped punch descends and forms the v-shaped bend. Bending is done using Press Brakes. Air bending is done with the punch touching the workpiece but not bottoming in the lower cavity. Spring-back is happened when the workpiece ends up with less bend than that on the punch after the punch released. Bottoming or coining is the bending process where the punch and the workpiece bottom on the die. This makes for a controlled angle with very little spring back.

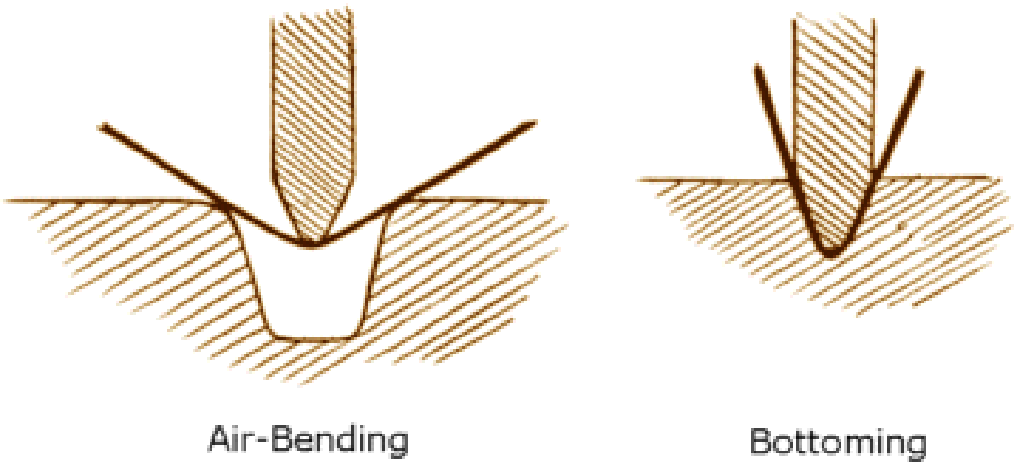

Figure 2.10: Types of Bending

Source: http://www.efunda.com/processes/metal_processing/bending

2.4.3 Drilling

Drilling is a cutting process that uses a drill bit to cut or enlarge a hole in solid materials. The drill bit cuts by applying pressure and rotation to the workpiece, chips will then form at the cutting edges. Drilled holes are characterized by their sharp edge on the entrance side and the presence of burrs on the exit side. The mechanical properties of the workpiece may be affected by drilling as it will result in low residual stresses around the hole opening and a very thin layer of highly stressed and disturbed material on the newly formed surface. Workpiece will easily corrode at the stressed surface. Besides that, the drilled holes should perpendicular to the surface of the workpiece in order to minimize the tendency of drill bit to "walk", which causes the hole to be misplaced. Higher length-to-diameter ratio of drill bit will result in higher tendency to walk. In addition, lubricant is applied at the tip of the drill bit to prolong the tool's life.

Figure 2.11: Drilling Machine

Source: FKM welding laboratory

2.4.4 Welding

Welding is a process that permanently joining two or more metals parts by melting both material and adding a filler material to form a pool of molten material that cools quickly to become a strong joint, with pressure sometimes used in conjunction with heat to produce the weld. Energy sources used for welding are including gas flame, an electric arc, a laser, an electron beam, friction, and ultrasound. Welding joint can be made more than 100% strong which mean joint strength is typically as high as strength of base metal, so welding joint will never fail. It is also possible for a skilled welder to add the specific material with desired characteristics to any portion of the machine parts. However, residual stress and distortion that occurred will result in damage of workpiece. Other than that, metallurgical changes will occurred in the weld filler metal during heating. Due to that, the molecular structure of base metal different from filler metal. However welding is also consider dangerous because it involve high energy. Besides, the quality defects sometimes is also difficult to be detected. Once the parts are welded they are difficult to be disassemble.

Figure 2.12: Arc Welding

Source: http://images.yourdictionary.com/arc-welding

2.4.5 Surface Finishing

Surface finishing alter the surface of a item to achieve a certain property by improving appearance, corrosion resistance, tarnish resistance, wear resistance, hardness, remove burrs and control friction. Surface finishing processes can be categorized into removing or reshaping finishing and adding or altering finishing. Example of removing or reshaping finishing is grinding. It can be done by contacting surface of rotating abrasive wheel with the surface of material to refined look and attain a desired surface feature. Besides that, example for adding or altering finishing is painting. Paint could be in any liquid, liquefiable, or mastic composition which after application to a substrate in a thin layer is converted to an opaque solid film. It is commonly used to protect color or provide texture to the objects.

Figure 2.13: Hand Grinder

Source: www.techno.com.my

Figure 2.14: Spray Paint

Source: http://www.newfroggy.com/

CHAPTER 3

METHODOLOGY

3.1 INTRODUCTION

This chapter will discuss on the flow of the project after conducting literature study. A flow chart is shown in this chapter. Other than that, 3 concept designs have been generated based on the criteria identified through market study. It is then followed by the selection of the final concept through concept scoring. The considered criteria are durability, stability, weight, adjustable angle, cost require, and ease of assemble. The concept design with the highest number of score in concept scoring will be selected as the final drawing. The drawing on the selected concept was drawn out using SolidWorks design software. All the parts are drew out with actual dimension. It is then followed by the selection of materials use for fabrication which are aluminum sheet metal, mild steel sheet metal, mild steel hollow bar. Finally, the method of fabrication process has been identified to fabricate the test rig. Fabrication processes including shearing process, bending process, drilling process, joining process and finishing process.

3.2 FLOW CHART

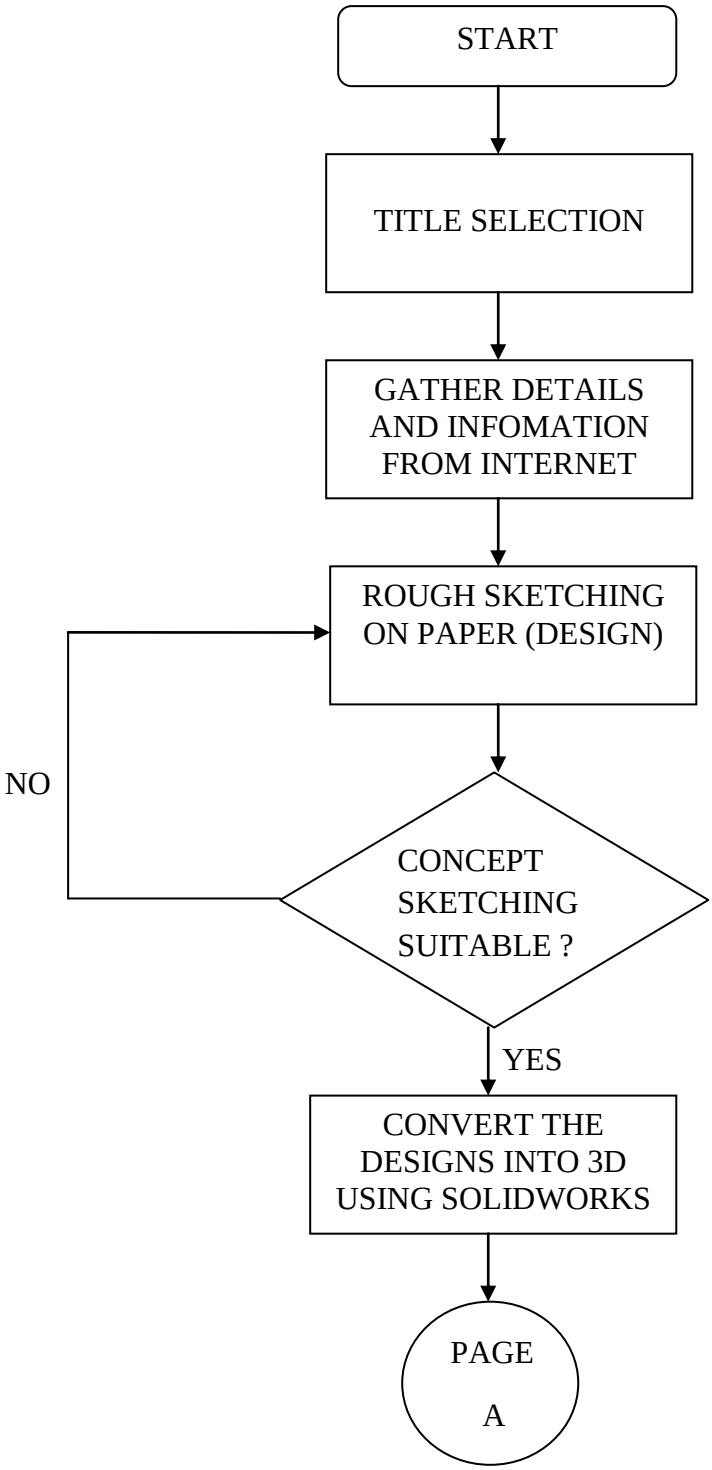

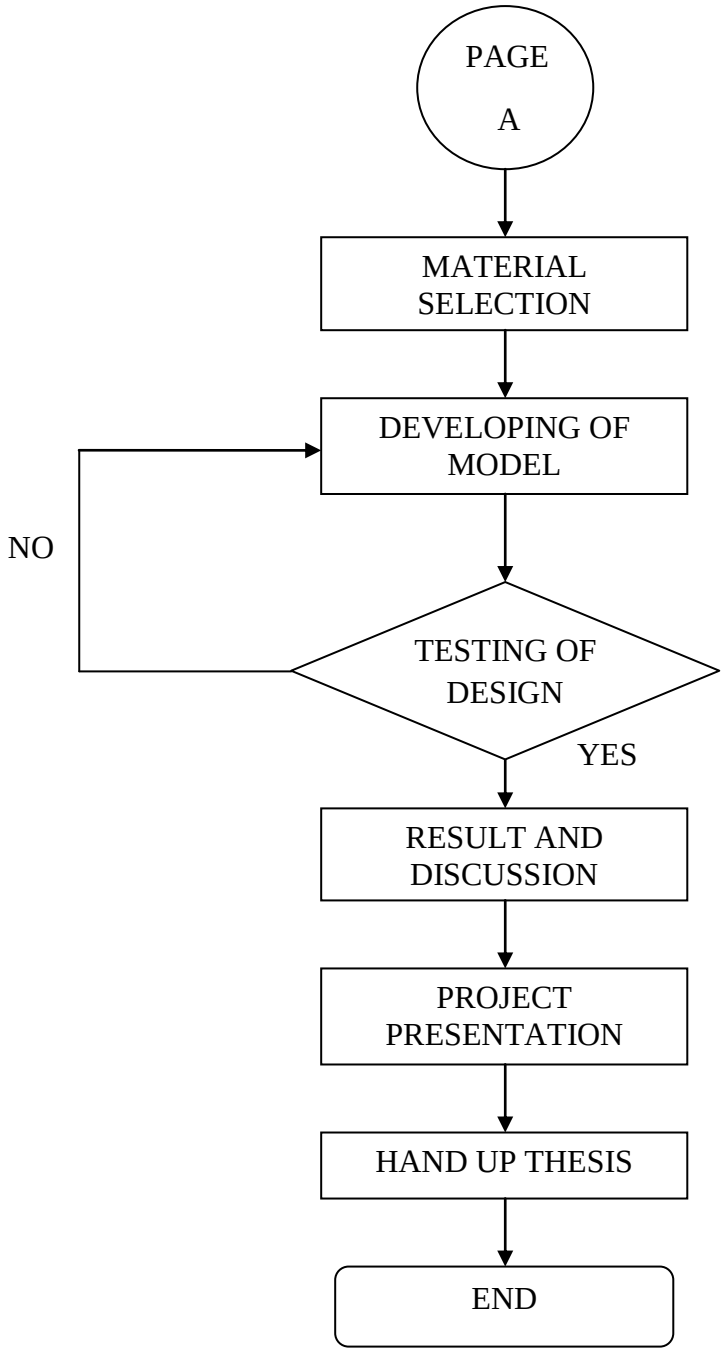

Figure 3.1: Flowchart

Table 3.1: Gantt chart

TASK \ WEEK		1	2	3	4	5	6	7	8	9	10	11	12	13	14
MEETING WITH SUPERVISOR	PLANNING														
	ACTUAL														
LITERATURE REVIEW	PLANNING														
	ACTUAL														
CONCEPT GENERATION	PLANNING														
	ACTUAL														
FINAL CONCEPT	PLANNING														
	ACTUAL														
MATERIAL SELECTION	PLANNING														
	ACTUAL														
FABRICATION	PLANNING														
	ACTUAL														
ANALYSIS & TESTING	PLANNING														
	ACTUAL														
PROJECT REPORT COMPLETION	PLANNING														
	ACTUAL														
PRESENTATION PROJECT	PLANNING														
	ACTUAL														

3.3 CONCEPT GENERATION

3.3.1 Concept 1

Concept 1 is designed into 2 separated parts where the first part is to hold the bow and the second part is used to draw the arrow by by using a winding machine. Both of these parts were designed to be adjustable in its height. In this design the frame of the test rig itself have a large base made of metal plate and supported by 4 legs beneath for stability. The bow is hold by a frame in front that looks like “H”. It has a dimension of height in 1500mm and a 600mm x 600mm for their base.

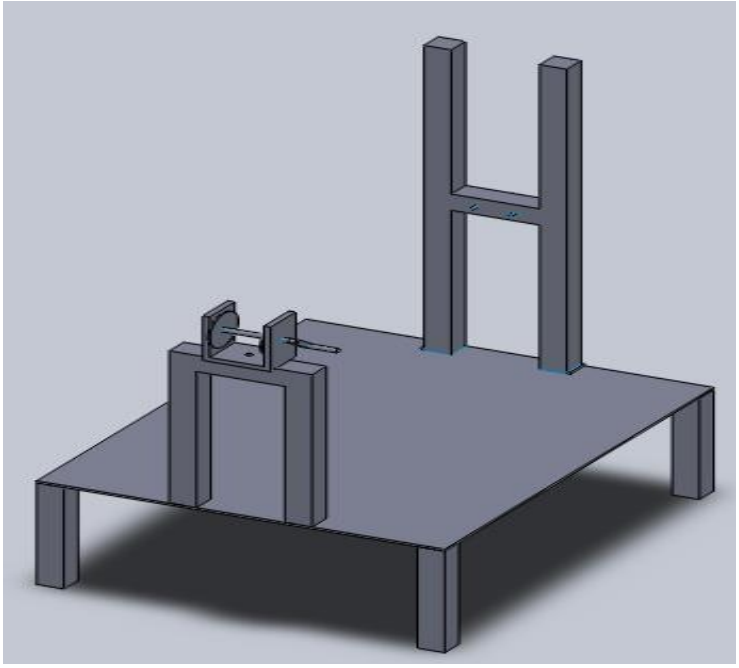

Figure 3.2: Design Concept 1

3.3.2 Concept 2

Concept 2 is designed with a simpler base for its for lighter weight for easy carry. This design holds the bow vertically in the front part and the bow is clamped using 2 U bolts and bracket. This design concept has a dimension with 900mm in length, 600mm in width and a maximum height of 1700mm.

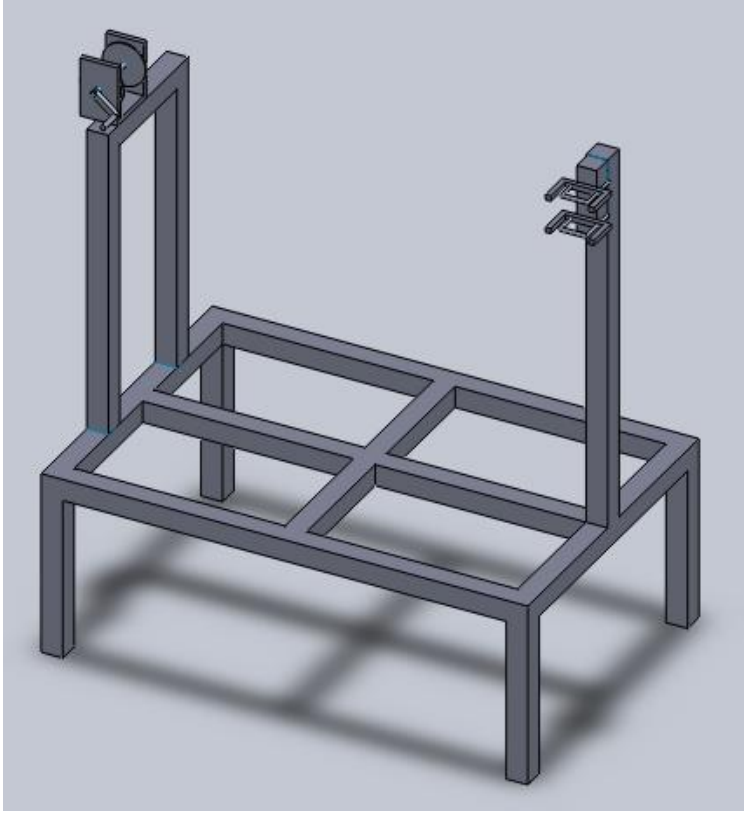

Figure 3.3: Design Concept 2

3.3.3 Concept 3

Concept 3 is designed with 2 separated body which is the upper half and the lower half as base. This concept is adjustable in its height according to desire athlete's height. Besides, it is also adjustable in its shooting angle to a maximum angle of 30 degree. The base is supported by 4 legs. Last but not least this concept has a winding machine mounted on the upper body to draw the bowstring.

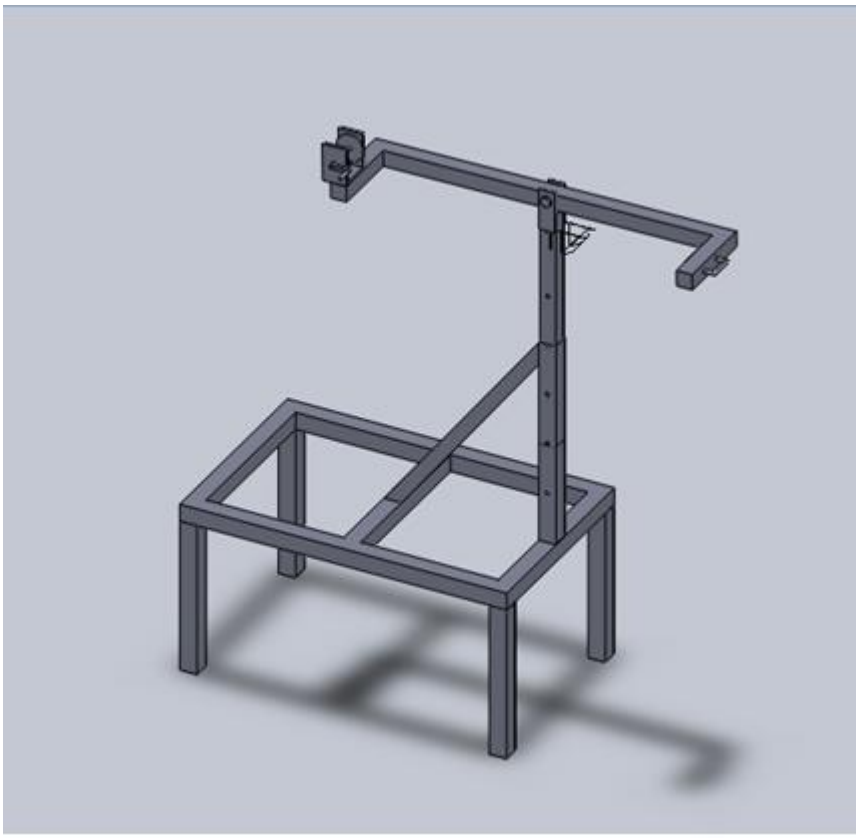

Figure 3.4: Design Concept 3

3.3.4 Concept 4

Concept 4 is basically similar to concept 3 but the upper body is welded in the middle of the base body. This is to achieve a better balancing and stability. This concept is also designed with a bow clamp in front of it and it has a protractor put on to determine the shooting angle. Besides, this concept also has a quick trigger release for the arrow launching. It has a dimension of 1050mm in length, 600mm in width, and a maximum height of 1800mm provided it is adjustable.

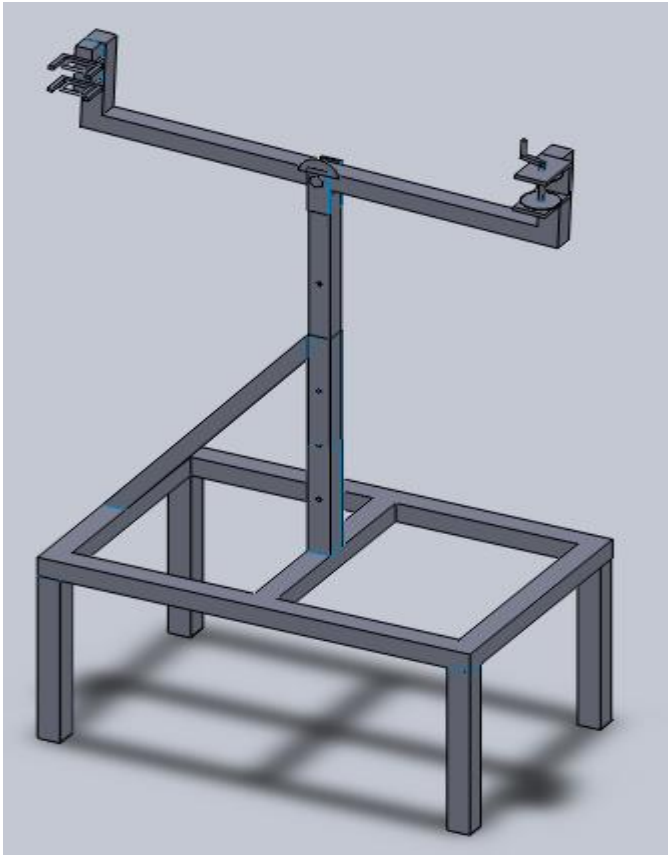

Figure 3.5: Design Concept 4

3.4 CONCEPT SCORING

There are 6 criteria considered in selection of the most suitable design for the archery test rig. “+” indicates it is better than, “0” indicates it is same as, and “-” indicates it is worse than. All of these signs refer to the datum. The datum is the 3rd product namely kwik-shooter in the literature review (Refer to Figure 2.3). Concept with the highest net score will be the final concept of the archery test rig.

Table 3.2: Concept Scoring

Selection criteria	**Concepts**				
	1	**2**	**3**	**4**	**D (Datum)**
1. Stability	-	+	0	+	0
2. Adjustable angle	0	0	+	+	0
3. Space occupied	-	-	-	-	0
4. Adjustable height	+	-	+	+	0
5. Durability	0	+	0	+	0
6. Low weight	-	-	-	-	0
∑ +	1	2	2	4	0
∑ 0	2	1	2	0	7
∑ -	3	3	2	2	0
Net score	-2	-1	0	2	0
Rank	4	3	2	1	5

3.5 CONCEPT FINALIZATON

After carry out concept scoring, Concept 4 (Refer to Figure 3.5) has the highest net score. Thus, it is identified to be the best concept to proceed for the next stage. Figure 3.6 (a) & (b) shows the overview of the working table in SolidWorks.

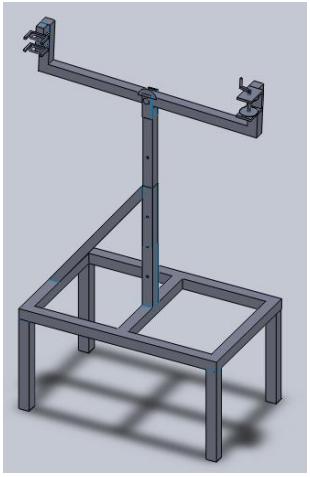

Figure 3.6(a): Isometric view

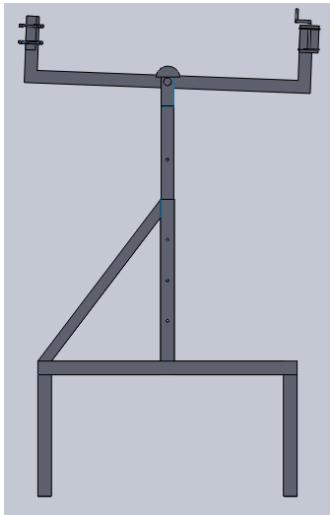

Figure 3.6(b): Front view

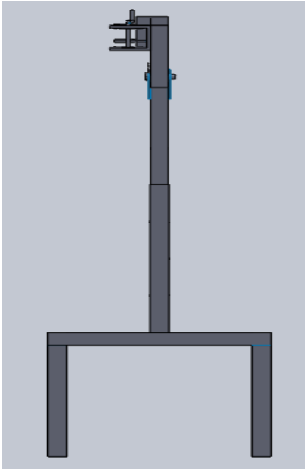

Figure 3.6(c): Side view

3.5.1 Base

Base is the first part in the drawing process since it is consider the most important part of the test rig as it is the support of the whole body. Figure 3.6 shows the base of the test rig with 4 legs attached on it. The dimension is 450mm in height, 600mm in width, and a length of 960mm.

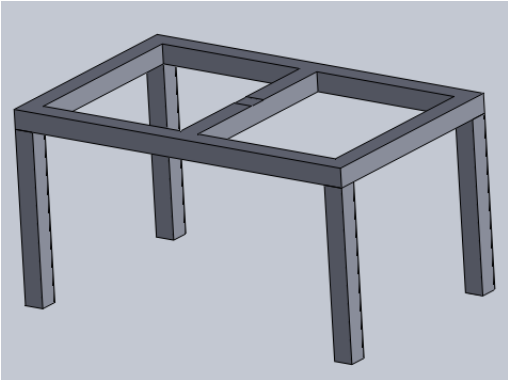

Figure 3.7: Base

3.5.2 Static body and Supporting body

After completing the base, the supporting body and the static body of the upper part of the test rig is attached to the base. Figure 3.7 shows the static body and Figure 3.8 shows the supporting body. It has a dimension of 600mm in height, 51mm in width and length.

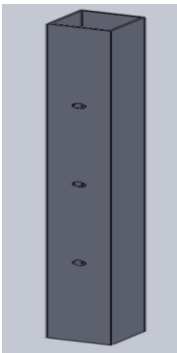

Figure 3.8: Static Body

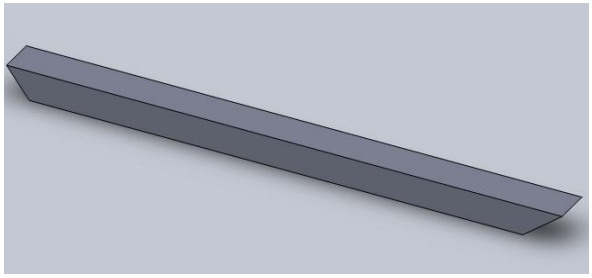

Figure 3.9: Supporting Body

3.5.3 Moveable Body, Winding Machine, and Upper Body

Once the static body, supporting body and base has been completed and combined, the process is then continued with drawing of the moveable body which is a part that is slotted into the static body to adjust the height of the bow during shooting which is slightly different in width and length. The moveable body has a dimension of 700mm in height, and 46.8mm in both its width and length. Figure 3.9 shows the moveable body and Figure 3.10 shows the combined lower part of the test rig.

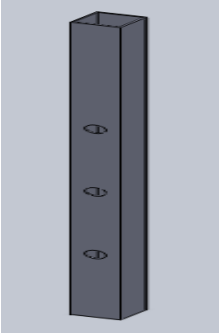

Figure 3.10: Moveable Body

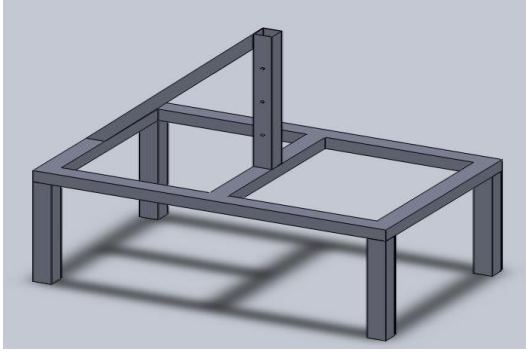

Figure 3.11: Lower Body Combined

Finally, with the attachment of the winding machine and the upper body, the whole drawing is done. Figure 3.11 shows the winding machine and Figure 3.12 shows the upper body part.

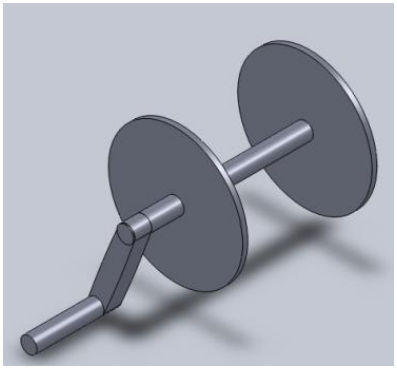

Figure 3.12: Winding Machine

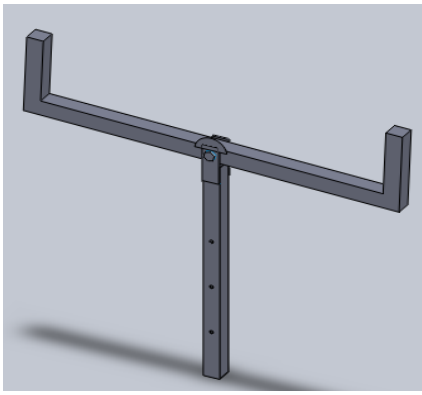

Figure 3.13: Upper Body

3.6 List of Materials

For this project, there are 2 types of materials used such as hollow steel bar and aluminum metal. The hollow steel bar is used to fabricate the whole body frame. This material is selected because of its high strength and also low weight compared to solid steel bar. This material is also very hard and not brittle.

Besides, the aluminum sheet metal is used to make the quick release. This material is selected because it is lightweight and corrosion resistance and also more durable.

Table 3.3: Material List

No	Part	Material	Dimension	Quantity
1.	Body Frame	Hollow Steel Bar	960mm x51mm x51mm	2
			600mm x51mm x51mm	2
2.	Legs	Hollow Steel Bar	450mm x 51 mm x51mm	4
3.	Quick Release	Aluminum	50mm in diameter	1
			90mm x30mm	2

3.7 FABRICATION PLANNING

In this stage, fabrication process planning is prepared for fabrication of archery test rig after selection of material.

3.7.1 Measuring and Marking Process

The fabrication process starts with measuring and marking the materials into the dimension needed according to the design. The measuring and marking process is done by using steel ruler, measuring tape, scriber and engineer's square.

Figure 3.14: Measuring Process

Figure 3.15: Marking process

3.7.2 Cutting Process

After measuring and marking process is done, the materials will be cut according to the mark by using bendsaw machine and disc cutter machine.

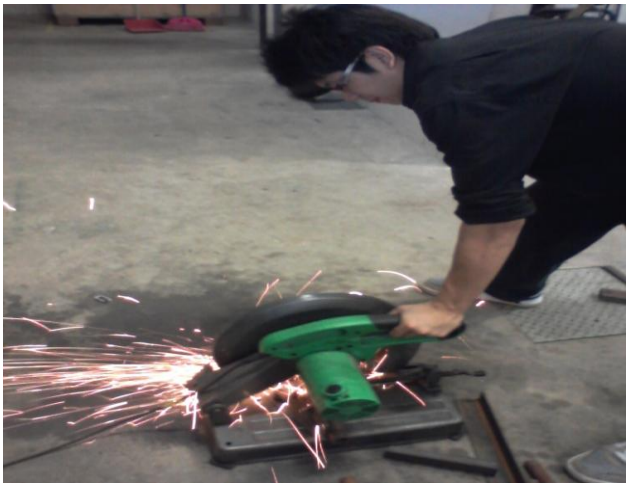

Figure 3.16: Cutting Process

3.7.3 Drilling Process

After finish cutting the materials into the pieces that are needed, continue with drilling process to make holes on the upper body part that will attach the connecting plate and the upper body together.

Figure 3.17: Drilling Process

3.7.4 Welding Process

Next, the fabrication process continues by assembling all the parts through welding process. The welding that were used in this fabrication is gas metal arc welding (GMAW), also known as metal inert gas or MIG welding. It is a automatic process that uses a continuous wire feed as an electrode and an inert gas mixture to protect the weld from contamination. Since the electrode is continuous, welding speeds are greater for GMAW than for SMAW. Also, the smaller arc size compared to the shielded metal arc welding process makes it easier to make out-of-position welds.

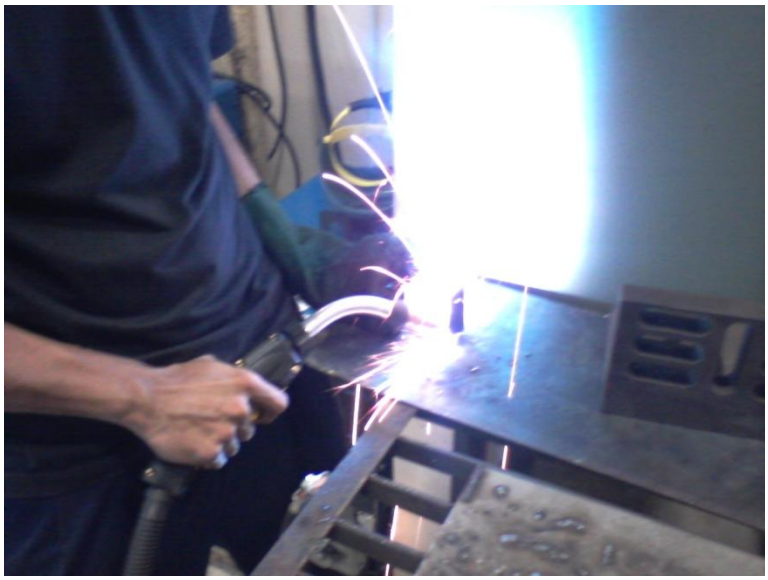

Figure 3.18: Welding Process

3.7.5 Grinding and Painting Process

After finished welding, the next step is grinding to dispose the over limited and melted welding parts. This is one of the ways to make the prototype looks clean and attractive.

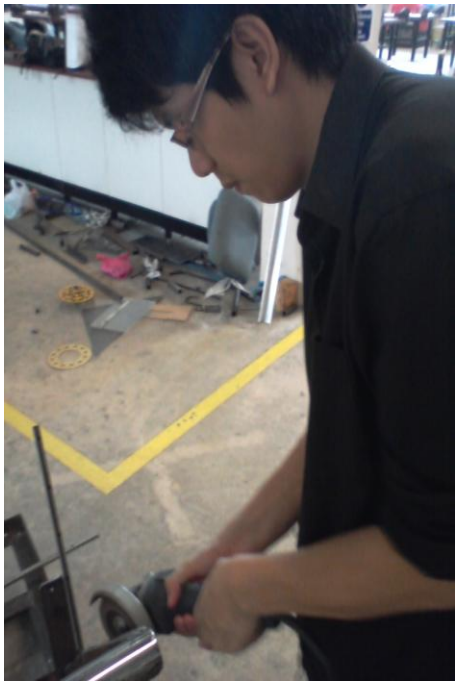

Figure 3.19: Grinding Process

After finalizing all the parts, paint the whole body. This is one of the way to prevent the test rig from corrosion. Besides that, the test rig will also look more attractive.

Figure 3.20: Painting Process

CHAPTER 4

RESULTS AND DISCUSSIONS

4.1 INTRODUCTION

The result and discussion function as an achievement of the target for the final year project. However, if the target is not met, it means there were problems faced during the process and will be discussed. If the result proves the objective is accomplished, the process is discussed too. This part of the project is about understanding the outcome of the testing process. The outcome of the testing resolves in the performance of the distance travelled by the arrow released from the bow that is mounted on the test rig. The performance will prove whether the design is appropriate or not. Basically, this analysis is a must for the project because it shows how well the test rig is operated. The focus of this chapter is solely on the product of this project. Once the target of this chapter is met, then only the whole project process and outcome can be concluded in the next chapter.

4.2 FINAL PRODUCT

4.2.1 Overview of product

The fabricated test rig view is shown in Figure 4.1

Figure 4.1: Overview of the test rig

4.2.2 Overview of Lower Part of Body

Figure 4.2 shows the result of finished welding of the lower part of body. This part was done using hollow steel bar. The MIG welding machine was used to complete the joining process of this part. This is the main support for the whole test rig. Holes were drilled to slot a lock pin to keep the moveable body still in the desired height.

Figure 4.2: Lower Part of Body

4.2.3 Overview of Lock Pin

Figure 4.3 shows the lock pin that is used to slot into both the static and moveable body to keep them in still. This pin is made of steel rod. It was bended manually.

Figure 4.3: Lock Pin

4.2.4 Overview of Winding Machine

Figure 4.4 shows the winding machine that is mounted at the back of the test rig. Its function is to draw the bow string to a certain tension before releasing it. This winding machine is made sheet metal and steel hollow pipe. The gear is produced by using grinding process for the teeth part. After that, all of the part is then welded using arc welding machine.

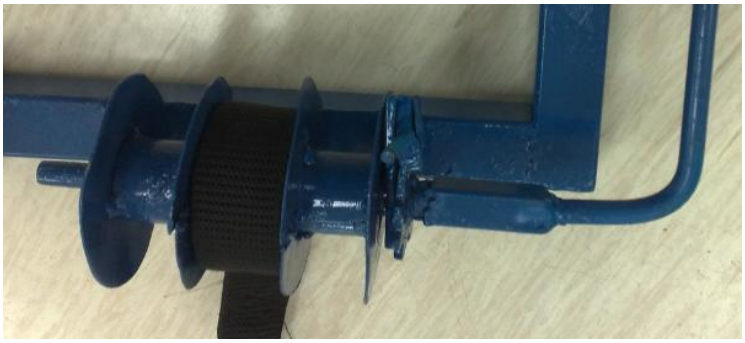

Figure 4.4: Winding Machine

4.2.5 Overview of Quick Release

Figure 4.5 shows the quick release mechanism. This device is use to hold the bowstring and release it. This device is made of aluminum sheet metal. There are cuts into 3 parts consists of 2 rectangular parts and 1 round part. Holes were drilled on each part so that a safety pin can be slotted in as a trigger.

Figure 4.5: Quick Release

4.3 RESULT AND ANALYSIS

4.3.1 Testing on Launching

After the fabrication process is done, 3 times of launching is being carried out. The selected bow is put on the test rig and the arrow is launched 3 times at the field. The results obtained were such as 25m for the first launch, 26m for the second launch, and 27.5m for the third launch.

4.3.2 Analysis

There are 2 types of analysis that has been conducted which are consisting of stress analysis and strain analysis. These analyses are carried out on top most part of the test rig that holds the bow and winding machine (Refer Figure 3.12). Through this analysis, the maximum stress and maximum strain are obtained.

4.3.2.1 Stress Analysis

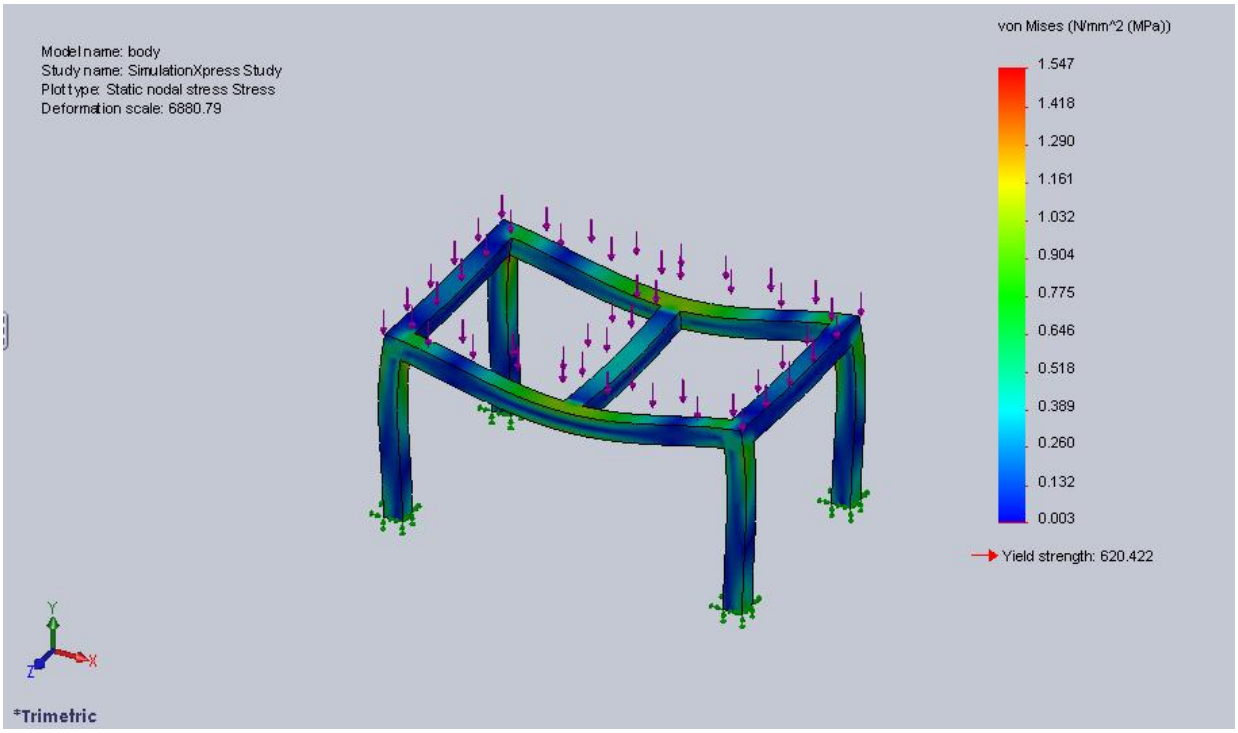

Figure 4.6: Stress Analysis on body

Name	Type	Minimum Stress (N/mm^2)	Maximum Stress (N/mm^2(MPa))
Body	Stress Analysis	0.003	1.547

4.3.2.2 Displacement Analysis

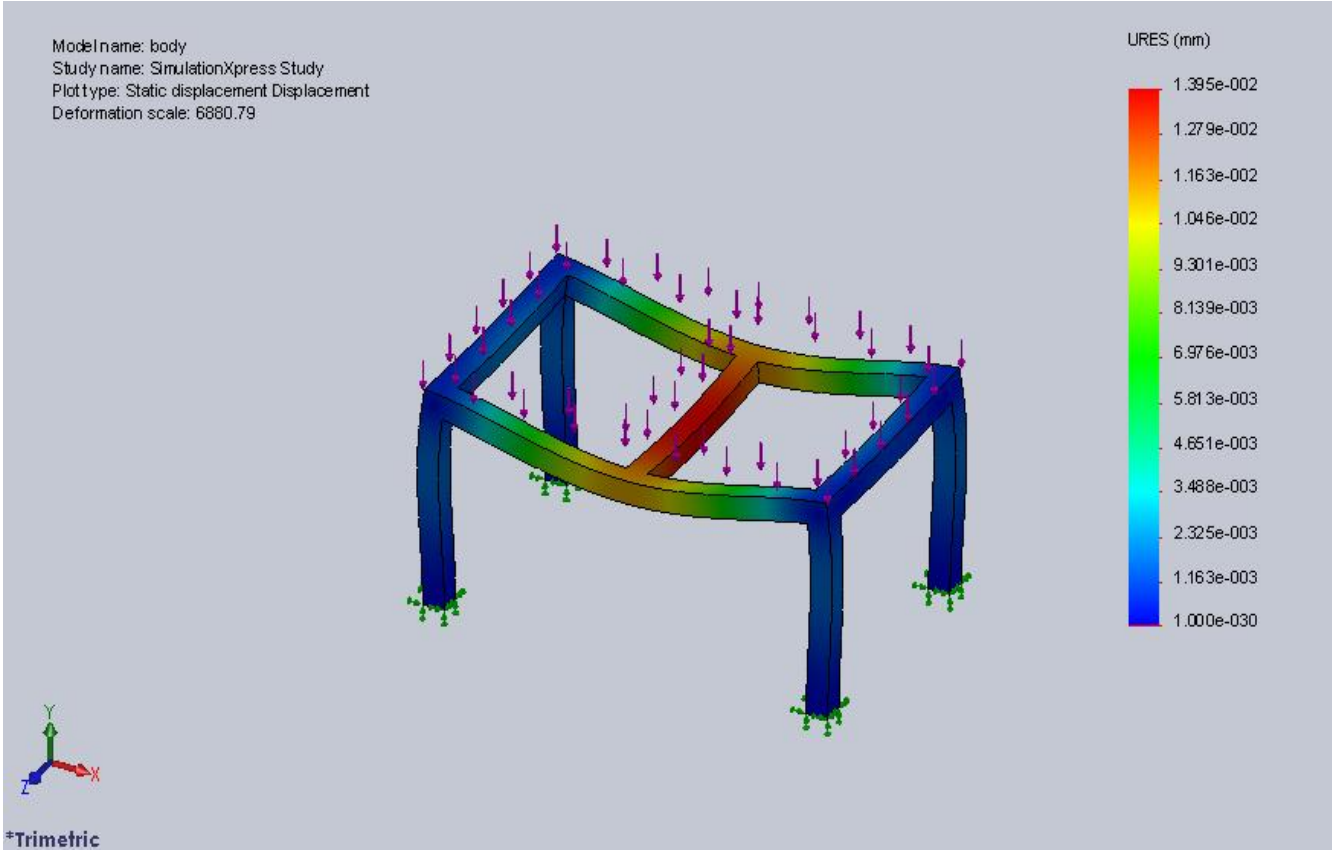

Figure 4.7: Displacement Analysis on Body

Name	Type	Minimum Displacement (mm)	Maximum Displacement (mm)
Body	Displacement Analysis	0	0.01395

CHAPTER 5

CONCLUSION AND RECOMMENDATION

In this chapter, a summary is established to conclude the whole final year project. However there were problems faced during the course of this project. The measures taken to rectify these problems have been identified and applied. There will be recommendations for future project of the same kind to improve it. Therefore a more complete understanding and enhanced application steps can be attained. In addition, the interest on the knowledge of the manufacturing engineering can be spread to a larger population not only in the engineering field but also for public.

5.1 PROBLEM FACED DURING THE PROJECT

During the design and fabrication process of archery test rig project, many obstacles were faced. The first was obtaining the knowledge of the bow and shooting machine. This knowledge is not through in any lectures and this project is different from others. Therefore, internet and books from the library was the main source of information. The next problem faced was obtaining the material for fabrication. Most of the needed material was not available. So, supervisor advice to use materials that available at laboratory but those materials does not meet the specification. After discussed with supervisor, I tried to survey the materials at nearer metal and hardware shops. Once I gather the information about materials needed and their prices, I discussed again with my supervisor to purchase. After supervisor agree and satisfy with the materials information, I bought the materials. Fabrication is proceeded when all the needed materials are available. Besides, another major problem faced was insufficient time to fabricate the test rig because very limited time is given and is not like

other students that have 14 weeks to complete their project. This is because the dean has to bring the test rig to an exhibition.

5.2 RECOMMENDATION

There are some recommendation Related to this project are material purchasing and receiving should be on schedule. This will help to complete fabrication process on schedule. Besides that, the material availability at mechanical laboratory must consider before decide the specification of design. The availability of material should be provided by laboratory instructor to reduce the time of searching for the correct material which delays the process.

Other than that, the design concept can be improved by building an automatic winding system that uses a motor to wind the bowstring. This makes the test rig look more professional and user does not have to keep winding the bowstring manually.

Besides, using a steel protractor to read the shooting angle instead of using the plastic protractor will be the ideal choice. This is because the scale on plastic protractor tends to fade after a certain time.

5.3 CONCLUSION

In conclusion, the project objectives were achieved. The first objective is designing the archery test rig. The simplest and best design was chosen. Then, fabricating the mechanical part of the test rig. From the testing conducted, the test rig can reach a maximum height of 199cm and a maximum of 20 degree in angle. The maximum distance travelled by the arrow in 3 launches at 20 degree were 25m, 26m, and 27.5m respectively. In addition, mild steel is also proven to be a suitable material used to fabricate the test rig as it can withstand a certain load without failure. Besides, the fabrication process required many skills that have been learnt in previous mechanical laboratory such as material measuring, marking, cutting, drilling, welding and grinding. The fabrication process let student to gain experience and develop the skills and the ways to operate the machines to complete the project. Besides that, the student also learnt how to solve the problems during the designing and fabrication process. It was a motivation for student to face the challenges as a professional engineer in this global era.

REFERENCES

[1] http://www.topendsports.com/sport/archery/

[2] en.wikipedia.org/wiki/Archery

[3] http://www.olympic.org/archery-equipment/

[4] https://sites.google.com/site/technicalarchery/

[5] http://www.archerytalk.com/vb/

[6] http://piratesofarchery.net/bb/

[7] http://www.abbeyarchery.com.au

[8] http://www.archeryaddix.com/

[9] http://mysite.du.edu/

[10] http://en.wikipedia.org/wiki/Stainless_steel

[11] http://en.wikipedia.org/wiki/Steel

[12] http://en.wikipedia.org/wiki/Sheet_metal

[13] http://www.gasgoo.com/showroom/

[14] http://www.asia-manufacturer.com/manufacturers/

[15] http://www.tomsguide.com/us/

[16] http://www.longhaisteelinc.com/operations/raw-materials

[17] http://www.homedeco2u.com/how-to-tips/

[18] http://www.custompartnet.com/

[19] http://www.efunda.com/processes/metal_processing/bending.cfm

[20] http://www.cncedm-machine.com

[21] http://en.wikipedia.org/wiki/Drilling

[22] http://www.newfroggy.com/

[23] www.techno.com.my

[24] http://images.yourdictionary.com/arc-welding

APPENDIX A

FIGURE OF MACHINES

Bendsaw Machine

Disc Cutter Machine

Drilling Machine

Metal Inert Gas Welding (MIG)

Grinding Machine

Hand Drill

APPENDIX B

PERSONAL PROTECTIVE EQUIPMENT (PPE)

Face shield

Welding Gloves

Safety Boot

Safety Jacket

Safety Google

APPENDIX C

FIGURE OF DRAWING OF EACH PART.

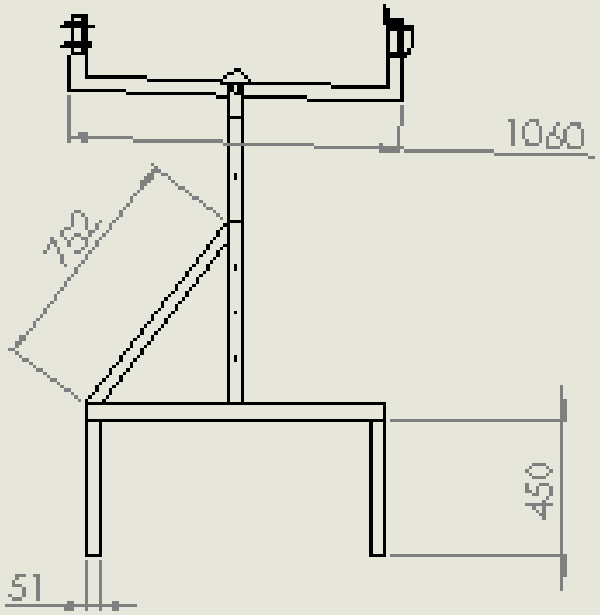

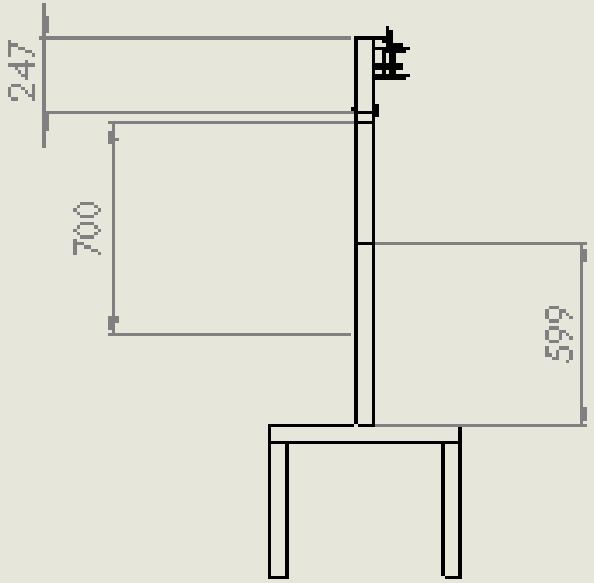

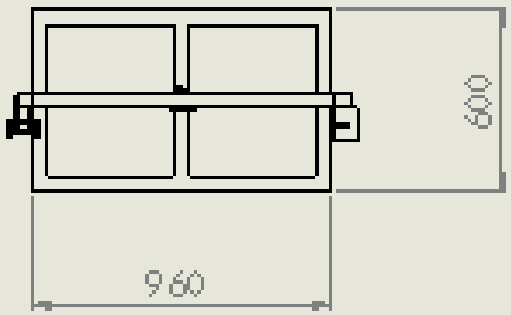

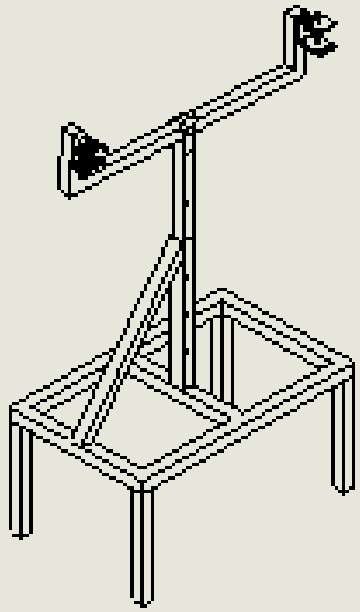

UMP	TITLE : FINAL DESIGN	DATE : 8 JANUARY 2013	SIZE : A3
	NAME : SEOW KOK FOO	SCALE 1:18	SHEET 1

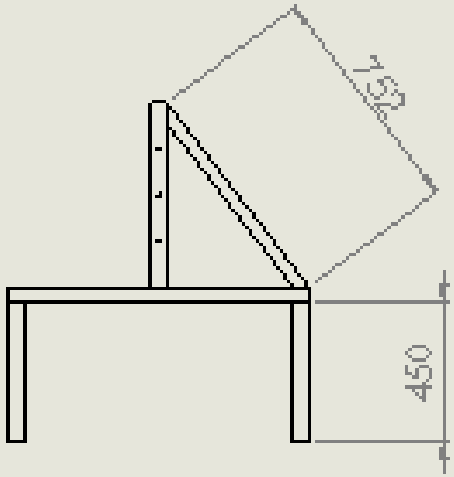

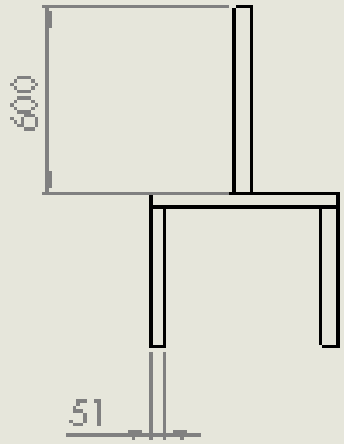

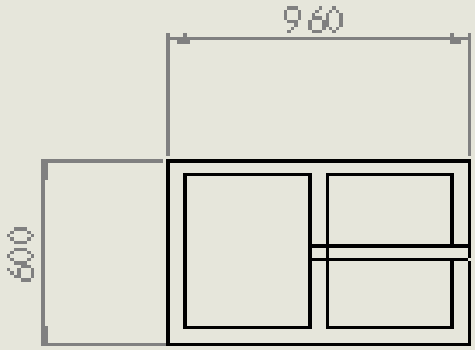

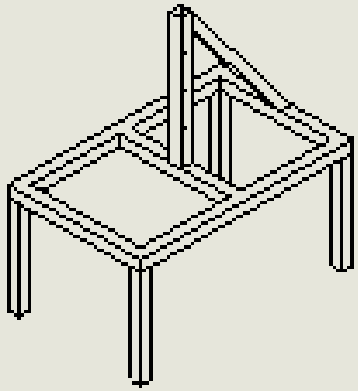

UMP	TITLE : BASE	DATE : 8 JANUARY 2013	SIZE : A3
	NAME : SEOW KOK FOO	SCALE 1:18	SHEET 2

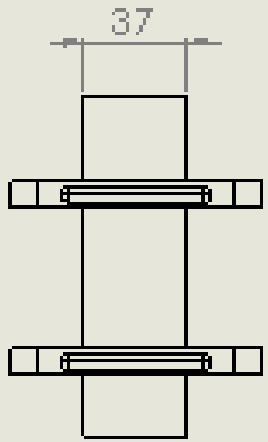

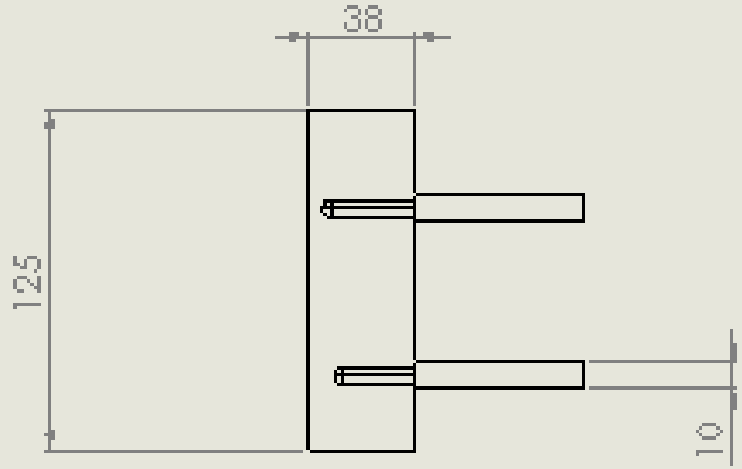

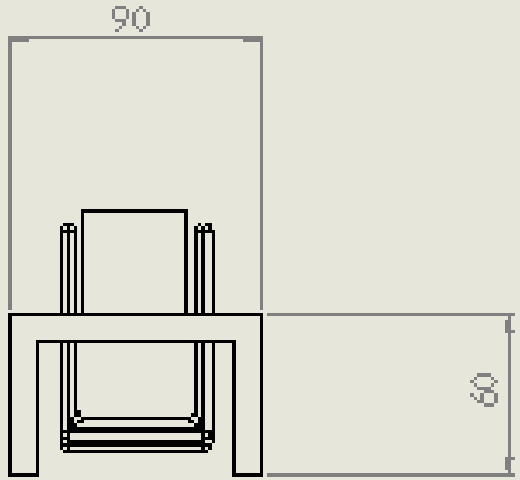

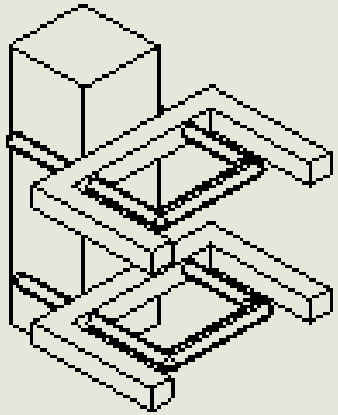

UMP	TITLE : BRACKET	DATE : 8 JANUARY 2013	SIZE : A3
	NAME : SEOW KOK FOO	SCALE 1:18	SHEET 3

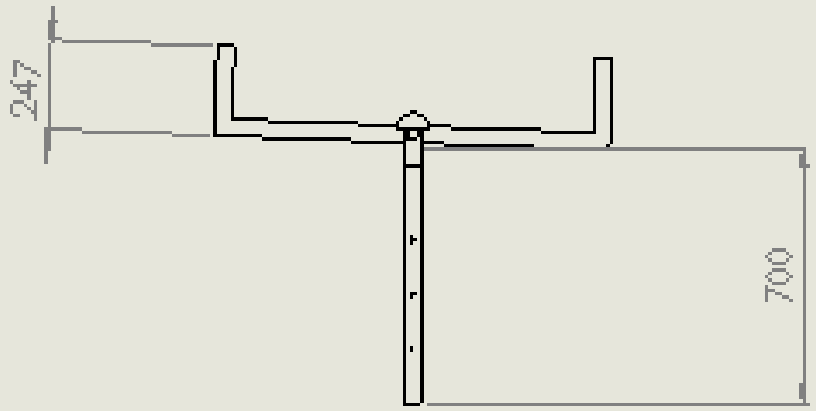

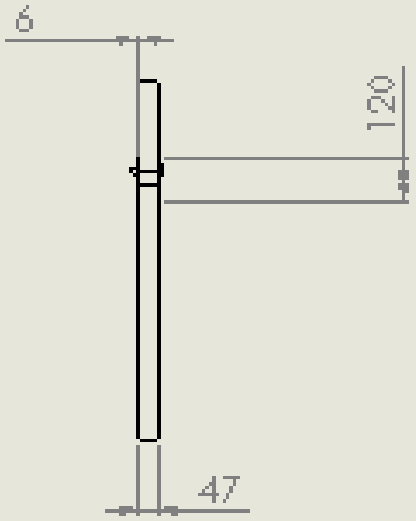

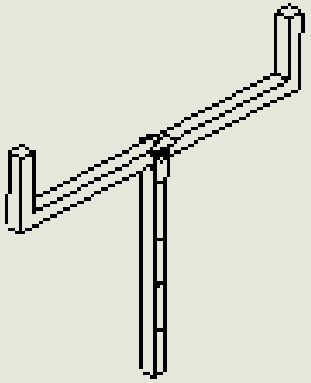

UMP	TITLE : UPPER BODY	DATE : 8 JANUARY 2013	SIZE : A3
	NAME : SEOW KOK FOO	SCALE 1:15	SHEET 4

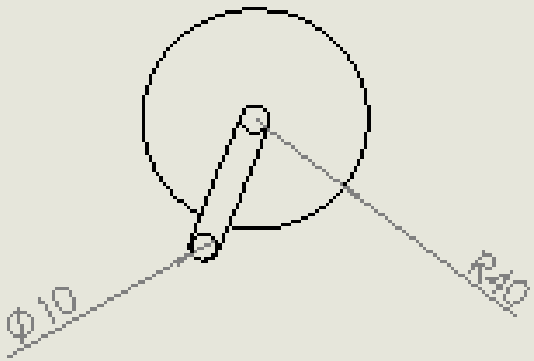

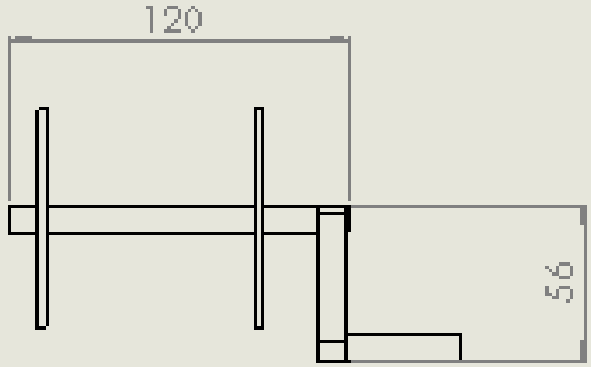

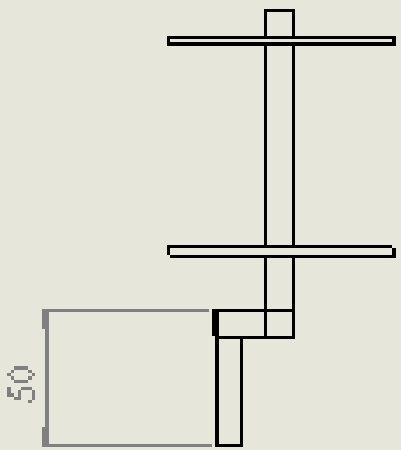

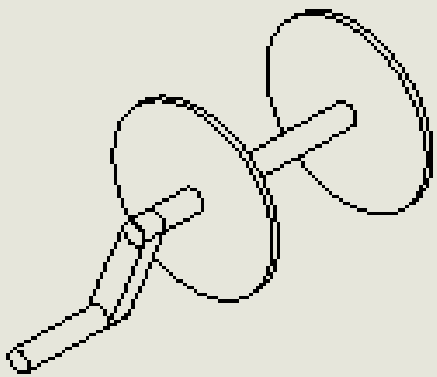

UMP	TITLE : WINDING MACHINE	DATE : 8 JANUARY 2013	SIZE : A3
	NAME : SEOW KOK FOO	SCALE 1:2	SHEET 5